AGENDA OF THE REDEVELOPMENT AUTHORITY OF THE CITY OF GREEN BAY

TUESDAY, AUGUST 13, 2019, 1:30 PM
CITY HALL, ROOM 604 - THE HARRY MAIER ROOM

A. Roll Call.

1. Members: Gary Delveaux, Chair; Matt Schueller, Vice-Chair; Ald. Barbara Dorff, James Blumreich, Deby Dehn, Kathy Hinkfuss, and Melanie Parma.
   Liaisons: Chelsea Kocken, Jeff Mirkes, and Leah Weycker.

B. Approval of the Agenda.

1. Approval of the agenda for the August 13, 2019, meeting of the Redevelopment Authority.

C. Approval of Minutes.

1. Approval of the minutes from the July 9, 2019, regular meeting of the Redevelopment Authority.

D. Regular Business.

1. Consideration with possible action on communication from July 16, 2019, of the Common Council by Ald. Brian Johnson, to consider forgiveness of Broadway loan made to Cup O' Joy.

2. Consideration with possible action on Obligations of Developer to Development Agreement 19-02 with The Legacy Green Bay, LLC, for the Legacy Hotel at 1004 Brett Favre Pass (Tax Parcel 1-1841-C-2).

3. Consideration with possible action to issue Request for Qualifications for an Operator(s) for the Shipyard at 100 W. Mason Street (Tax Parcel 2-78).

The Authority may convene in closed session pursuant to Sections 19.85(1)(e), Wis. Stats., for purposes of deliberating or negotiating the sale of public properties, investing of public funds or conducting other specified public business as necessary for competitive or bargaining reasons. The Authority may thereafter reconvene in open session pursuant to Section 19.85(2), Wis. Stats., to report the results of the closed session and consider the balance of the agenda.

4. Consideration with possible action on communication from June 19, 2018, of the Common Council by Ald. Brian Johnson, to direct staff to draft a percent for the arts proposal that would assess a specified percent on all new and/or redevelopment projects for the purpose of public art installation, maintenance and funding staff to support the public arts commission.

5. Consideration with possible action on a request by Merge Urban Development Group for a three (3)-month extension on their Planning Option Agreement dated April 9, 2019 for the development of the RDA's properties located at 321 and 325 N. Broadway.

6. Consideration with possible action on award of Contract CD 19-01 Part "A" Sidewalk & Pavement Repair to the low qualified bidder, Martell Construction, in the amount of $141,991.00 and Part "B" Alley Resurfacing to the low qualified bidder, Northeast Asphalt Inc., in the amount of $274,435.80.

7. Consideration with possible action to approve the purchase of a mobile stage for the KI Convention Center.

E. Informational.

1. Financial report and check register.

2. Director's report and project updates.

3. Next meeting: September 10, 2019 at 1:30 PM.

F. Adjournment.

1) THIS MEETING IS RECORDED: THE VIDEO OF THIS MEETING AND MINUTES ARE AVAILABLE ONLINE AT www.greenbaywi.gov
2) ACCESSIBILITY: Any person wishing to attend who requires special accommodation because of a disability, should contact the City Safety Manager at 920-448-3125 at least 48 hours before the scheduled meeting time so that arrangements can be made.
3) QUORUM: Please take notice that a majority or quorum of the Common Council will attend this Redevelopment Authority meeting and will constitute a meeting of the Common Council for purposes of discussion and information gathering relative to this agenda.
4) REPRESENTATION: The party requesting the communication, or their representative, should be present at this meeting.

MINUTES OF THE REDEVELOPMENT AUTHORITY OF THE CITY OF GREEN BAY

TUESDAY, JULY 9, 2019, 1:30 PM
CITY HALL, ROOM 604 - THE HARRY MAIER ROOM

A. ROLL CALL.

1. Members: Gary Delveaux, Chair; Matt Schueller, Vice-Chair; Ald. Barbara Dorff, James Blumreich, Deby Dehn, Kathy Hinkfuss, and Melanie Parma.
Liaisons: Chelsea Kocken, Jeff Mirkes, and Leah Weycker.

Members Present: Gary J. Delveaux, Matt Schueller, Deby Dehn, Ald. Barbara Dorff, Excused: James Blumreich, Melanie Parma, Kathy Hinkfuss
Liaisons Present: Leah Weycker
Others Present: Ald. Brian Johnson

B. APPROVAL OF THE AGENDA.

1. Approval of the agenda for the July 9, 2019, meeting of the Redevelopment Authority.

Moved by Matt Schueller, seconded by Ald. Barbara Dorff to approve the agenda. Motion carried.
Yes- Barbara Dorff, Gary J. Delveaux, Matt Schueller, Deby Dehn, No- None, Abstain- None

C. APPROVAL OF MINUTES.

1. Approval of the minutes from the June 4, 2019, regular meeting of the Redevelopment Authority.

Moved by Matt Schueller, seconded by Ald. Barbara Dorff to approve the minutes. Motion carried.
Yes- Barbara Dorff, Gary J. Delveaux, Matt Schueller, Deby Dehn, No- None, Abstain- None

D. REGULAR BUSINESS.

1. Consideration with possible action to approve Preliminary Concept Plan(s) for the Shipyard at 100 W. Mason Street (Tax Parcel 2-78).

The Authority may convene in closed session pursuant to Sections 19.85(1)(e), Wis. Stats., for purposes of deliberating or negotiating the sale of public properties, investing of public funds or conducting other specified public business as necessary for competitive or bargaining reasons. The Authority may thereafter reconvene in open session pursuant to Section 19.85(2), Wis. Stats., to report the results of the closed session and consider the balance of the agenda.

Moved by Ald. Barbara Dorff, seconded by Matt Schueller to approve Preliminary Concept Plan(s) for the Shipyard at 100 W. Mason Street (Tax Parcel 2-78). Motion carried.
Yes- Barbara Dorff, Gary J. Delveaux, Matt Schueller, Deby Dehn, No- None, Abstain- None

2. Consideration with possible action to draft and negotiate Management Agreement(s) for the Shipyard at 100 W. Mason Street (Tax Parcel 2-78).

The Authority may convene in closed session pursuant to Sections 19.85(1)(e), Wis. Stats., for purposes of deliberating or negotiating the sale of public properties, investing of public funds or conducting other specified public business as necessary for competitive or bargaining reasons. The Authority may thereafter reconvene in open session pursuant to Section 19.85(2), Wis. Stats., to report the results of the closed session and consider the balance of the agenda.

Moved by Ald. Barbara Dorff, seconded by Deby Dehn to go into closed session. Motion carried.
Ald. Barbara Dorff read the closed session language.
Yes- Barbara Dorff, Gary J. Delveaux, Matt Schueller, Deby Dehn, No- None, Abstain- None

Moved by Ald. Barbara Dorff, seconded by Matt Schueller to return to regular order of business. Motion carried.
Yes- Barbara Dorff, Gary J. Delveaux, Matt Schueller, Deby Dehn, No- None, Abstain- None

Gary Delveaux reported that options were discussed and staff will proceed accordingly as discussed in closed session.

3. Consideration with possible action on the implementation of a Curb Appeal Program for the Shipyard Investment Strategy.

Moved by Ald. Barbara Dorff, seconded by Matt Schueller to approve the Curb Appeal Program for the Shipyard Investment Strategy. Motion carried.
Yes- Barbara Dorff, Gary J. Delveaux, Matt Schueller, Deby Dehn, No- None, Abstain- None

4. Consideration with possible action on Resolutions designating the Redevelopment Authority (RDA) to perform all acts necessary for creating, amending, and/or closing Tax Increment District (TID) Five (5), Seven (7), Eight (8), Nine (9), Twelve (12), Thirteen (13), Fourteen (14), Seventeen (17), Twenty-Two (22), and Twenty-Three (23).

Kevin Vonck suggested that agenda item E1 be discussed before agenda item D4.

Moved by Matt Schueller, seconded by Ald. Barbara Dorff to amend the agenda to take item E1 before item D4. Motion carried.
Yes- Barbara Dorff, Gary J. Delveaux, Matt Schueller, Deby Dehn, No- None, Abstain- None

Moved by Matt Schueller, seconded by Deby Dehn to recommend Common Council adopt Resolutions designating the Redevelopment Authority (RDA) to perform all acts necessary for creating, amending, and/or closing Tax Increment District (TID) Five (5), Seven (7), Eight (8), Nine (9), Twelve (12), Thirteen (13), Fourteen (14), Seventeen (17), Twenty-Two (22), and Twenty-Three (23). Motion carried.
Yes- Barbara Dorff, Gary J. Delveaux, Matt Schueller, Deby Dehn, No- None, Abstain- None

5. Consideration with possible action on a Resolution adopting Post Issuance Compliance Policy for Tax-Exempt Conduit Bonds.

Moved by Ald. Barbara Dorff, seconded by Matt Schueller to approve the Resolution for Post Issuance Compliance Policy for Tax-Exempt Conduit Bonds. Motion carried.
Yes- Barbara Dorff, Gary J. Delveaux, Matt Schueller, Deby Dehn, No- None, Abstain- None

6. Consideration with possible action to approve a contract to build a two-bedroom home on 900 S. Greenwood Avenue and to authorize staff to sell the property when job is complete.

The Authority may convene in closed session pursuant to Sections 19.85(1)(e), Wis. Stats., for purposes of deliberating or negotiating the sale of public properties, investing of public funds or conducting other specified public business as necessary for competitive or bargaining reasons. The Authority may thereafter reconvene in open session pursuant to Section 19.85(2), Wis. Stats., to report the results of the closed session and consider the balance of the agenda.

Moved by Ald. Barbara Dorff, seconded by Deby Dehn to award the contract for 900 S. Greenwood Avenue to the highest ranked vendor, JD Meulemans Custom Homes & Carpentry LLC, for $202,112.00 and direct staff to sell the completed home for the highest value to a qualified buyer. Motion carried.
Yes- Barbara Dorff, Gary J. Delveaux, Matt Schueller, Deby Dehn, No- None, Abstain- None

7. Consideration with possible action to approve the use of $19,994.00 in Community Development Block Grant Funds for the proposed Broadway Mural at 123 S. Broadway (Tax Parcel 3-113).

Moved by Ald. Barbara Dorff, seconded by Deby Dehn to approve the use of CDBG funds for the proposed Broadway Mural. Motion carried.
Yes- Barbara Dorff, Gary J. Delveaux, Matt Schueller, Deby Dehn, No- None, Abstain- None

8. Consideration with possible action to approve a Request for Proposals for redevelopment of the parking lot located on the 200 block of North Monroe Avenue.

Moved by Matt Schueller, seconded by Ald. Barbara Dorff to approve a Request for Proposals for redevelopment of the parking lot located on the 200 block of North Monroe Avenue. Motion carried.
Yes- Barbara Dorff, Gary J. Delveaux, Matt Schueller, Deby Dehn, No- None, Abstain- None

E. INFORMATIONAL.

1. Annual Tax Increment District (TID) reports.

Report presented by Diana Ellenbecker and Kevin Vonck. No action needed.

2. RDA loan update.

Update provided by Stephanie Schmutzer. No action needed.

3. Financial report and check register.

No action needed.

4. Director's report and project updates.

Moved by Gary J. Delveaux, seconded by Matt Schueller to open the floor for discussion. Motion carried.
Yes- Barbara Dorff, Gary J. Delveaux, Matt Schueller, Deby Dehn, No- None, Abstain- None

John Mehan, Robert W. Baird, gave a presentation regarding KI 2 bond refinancing.

Moved by Matt Schueller, seconded by Ald. Barbara Dorff to close floor for discussion. Motion carried.
Yes- Barbara Dorff, Gary J. Delveaux, Matt Schueller, Deby Dehn, No- None, Abstain- None

5. Next meeting: August 13, 2019 at 1:30 PM.

F. ADJOURNMENT.

Moved by Matt Schueller, seconded by Ald. Barbara Dorff to adjourn. Motion carried.
Yes- Barbara Dorff, Gary J. Delveaux, Matt Schueller, Deby Dehn, No- None, Abstain- None

Report to the
Redevelopment Authority
of the City of Green Bay

MEETING DATE	PREPARED BY
August 13, 2019	

AGENDA ITEM # D.1.

Consideration with possible action on communication from July 16, 2019, of the Common Council by Ald. Brian Johnson, to consider forgiveness of Broadway loan made to Cup O' Joy.

BACKGROUND

RECOMMENDATION

Refer to staff to come back at the September meeting.

FISCAL IMPACT

ATTACHMENTS

1. RDA Ald Johnson 7-16-19

PETITIONS AND COMMUNICATIONS FORM
COMMON COUNCIL
CITY OF GREEN BAY

Date of Council Meeting: 07-16-19

Request of Alderperson Brian Johnson

Refer to: RDA

Please state clearly the action requested. Requests should be turned in at the City Clerk's Office by 10:00 AM on the Thursday before a Council meeting. For late communications, present this form to the City Clerk after the request is read.

To consider forgiveness of Broadway loan made to Cup O' Joy.

Report to the
Redevelopment Authority
of the City of Green Bay

MEETING DATE	PREPARED BY
August 13, 2019	Kevin J. Vonck, CED Director

AGENDA ITEM # D.2.

Consideration with possible action on Obligations of Developer to Development Agreement 19-02 with The Legacy Green Bay, LLC, for the Legacy Hotel at 1004 Brett Favre Pass (Tax Parcel 1-1841-C-2).

BACKGROUND

In June 2019, the RDA and City approved Development Agreement 19-02 with The Legacy Green Bay, LLC, for the Legacy Hotel at 1004 Brett Favre Pass (Tax Parcel 1-1841-C-2). The Developer intends to complete a Project, which involves construction of a five (5)-story boutique, all-suites hotel of approximately ninety thousand (90,000) square feet, along with parking, landscaping, lighting and other related improvements. The project is located in the Legends District, just east of Lambeau Field and the Resch Center.

The Developers are also seeking approvals for obligations outlined in the Agreement, specifically: Section IV. A. Concept Plan; Section IV. B. Construction Documents; and Section IV. C. Development Budget. The Developer has provided the RDA Executive Director evidence of satisfaction of IV. F. Proof of Equity; IV. G. Proof of Financing; V. A. Existence; and V. B. Incumbency; Due Authorization.

RECOMMENDATION

Approve Obligations of Developer to Development Agreement 19-02 with The Legacy Green Bay, LLC, for the Legacy Hotel at 1004 Brett Favre Pass (Tax Parcel 1-1841-C-2).

FISCAL IMPACT

Not applicable.

ATTACHMENTS

1. 8.3 - Legacy Hotel - 1-1841-C-2 - Development Agreement - 190716 - IV. A. - Conceptual Plan (2)
2. 8.3 - Legacy Hotel - 1-1841-C-2 - Development Agreement - 190716 - IV. B. - Construction Documents
3. 8.3 - Legacy Hotel - 1-1841-C-2 - Development Agreement - 190716 - IV. C. - Budget

EXISTING "WALK OF LEGENDS" MONUMENT
POTENTIAL LEGENDS DISTRICT GATEWAY
POTENTIAL LEGENDS DISTRICT GATEWAY
EXISTING "WALK OF LEGENDS" MONUMENT
FUTURE BUILDING
POTENTIAL LEGENDS DISTRICT MONUMENT
POTENTIAL LEGENDS DISTRICT MONUMENT
EXISTING "WALK OF LEGENDS" MONUMENT
Shadow Ln
Liberty St
Packer
Ralley Ct
12th Ave
14th Ave
Victory Blvd
S Norwood Ave
Lombard Ave
VK
Reggie White Way
Barn St
Tony Canadeo Run
32
S Ashland Ave
Joannes Ave
Borvan Ave
Mike McCarthy Way
Morris Ave
Elm View Dr
Google Earth
© 2018 Google

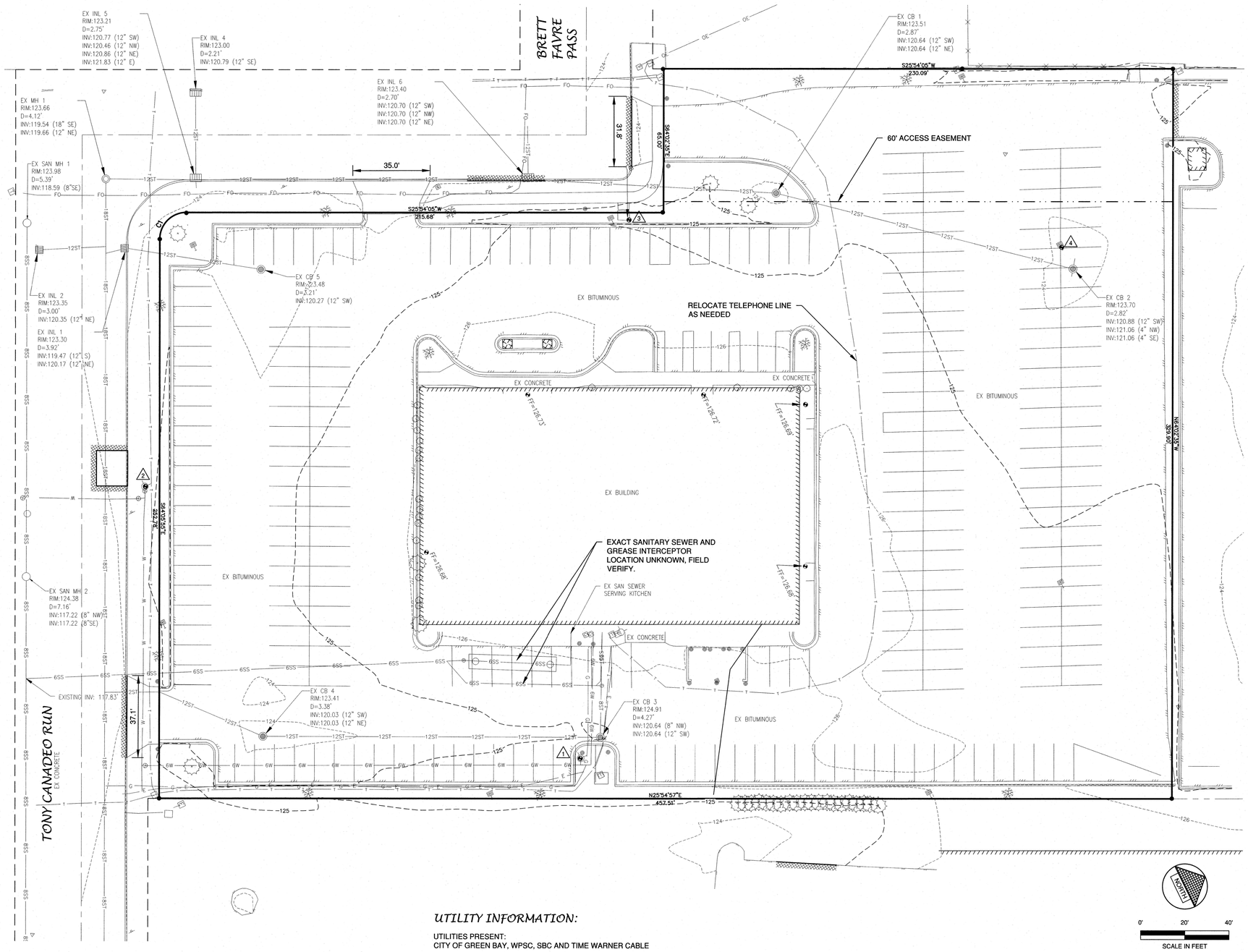

LEGEND

- FIRE HYDRANT
- WATER VALVE/CURB STOP
- SANITARY MANHOLE
- STORM MANHOLE
- OPEN STORM MANHOLE
- STORM INLET
- STORM INLET MANHOLE
- POST
- IRON PIPE/ROD
- PK NAIL
- POWER POLE
- POWER POLE W/GUY WIRE
- LIGHT POLE
- ELECTRIC MANHOLE
- ELECTRIC METER
- TELEPHONE MANHOLE
- TELEPHONE PEDESTAL
- GAS VALVE
- GAS METER
- SIGN
- BOLLARD
- DECIDUOUS TREE
- CONIFEROUS TREE
- BUSH
- CONCRETE
- HANDICAP PARKING
- SOIL BORING
- EDGE OF ASPHALT
- EDGE OF GRAVEL
- CURB & GUTTER
- TREE/BRUSH LINE
- CONTOUR LINE
- RETAINING WALL
- GUARD RAIL
- FENCE
- SANITARY SEWER (SIZE NOTED)
- FORCEMAIN (SIZE NOTED)
- STORM SEWER (SIZE NOTED)
- WATERMAIN (SIZE NOTED)
- GAS LINE
- OVERHEAD TELEPHONE LINE
- UNDERGROUND TELEPHONE LINE
- OVERHEAD ELECTRIC LINE
- UNDERGROUND ELECTRIC LINE
- OVERHEAD CABLE TV LINE
- CABLE TV LINE
- FIBER OPTIC LINE
- R/W LINE
- PROPERTY LINE
- EASEMENT LINE
- BUILDING SETBACK LINE
- SECTION LINE

Curve Table							
Curve #	Delta	Radius	Length	Chord Direction	Chord Length	Tangent Bearing	Second Tangent Bearing
C1	90°00'00"	12.00'	18.85'	N19°05'55"W	16.97'	N64°05'55"W	N25° 54' 05"E

BENCHMARK	BENCHMARK ESTABLISHED BY; ROBERT E. LEE & ASSOCIATES, INC. **FIELD VERIFY BENCHMARKS FOR ACCURACY.**	
NO.	DESCRIPTION	EL.
1	OP ON FIRE HYDRANT	127.61
2	OP ON FIRE HYDRANT	127.09
3	TOP OF NE COR OF FAVRE MARBLE SIGN	125.73
4	TOP OF NE COR OF LIGHT POLE BASE	126.61

UTILITY INFORMATION:

UTILITIES PRESENT:
CITY OF GREEN BAY, WPSC, SBC AND TIME WARNER CABLE

UTILITIES SHOWN ON THIS MAP ARE BASED ON LOCATES FROM:

DIGGER'S HOTLINE TICKET NUMBER 20184908398, DATED 12/17/18. VISIBLE OBSERVATION ON 12/21/18 AND RECORD UTILITY PLAN DOCUMENTS. UTILITY LINE LOCATIONS SHOULD BE VERIFIED PRIOR TO ANY DIGGING. THIS SITE MAY CONTAIN BURIED UTILITIES NOT IDENTIFIED ON THIS MAP.

DIGGERS HOTLINE = 1-800-242-8511

GREEN BAY WATER DEPARTMENT
631 S. ADAMS ST.
GREEN BAY, WI 54301

(920)448-3480

DEPARTMENT OF PUBLIC WORKS
CITY OF GREEN BAY
100 N. JEFFERSON ST.
GREEN BAY, WI 54301

(920) 448-3100

TIME WARNER CABLE
2580 W. MASON ST.
GREEN BAY, WI 54303

(920) 944-1581

GBMSD
2231 N. QUINCY ST.
GREEN BAY, WI 54302

(920)432-4893

WISCONSIN PUBLIC SERVICE CORP.
700 N. ADAMS ST.
GREEN BAY, WI 54307

(800) 797-7434

WISCONSIN PUBLIC SERVICE CORP.
1717 10TH ST.
MENOMINEE, MI 49858

(906) 863-4319

DIGGERS HOTLINE
Dial 811 or (800) 242-8511
www.DiggersHotline.com

TO OBTAIN LOCATION OF PARTICIPANTS UNDERGROUND FACILITIES BEFORE YOU DIG IN WISCONSIN

WIS. STATUTE 182.0175 (1974) REQUIRES MIN. OF 3 WORK DAYS NOTICE BEFORE YOU EXCAVATE.

OWNER INFORMATION:

THE LEGACY GREEN BAY, LLC.
226 MIRAMAR DRIVE
GREEN BAY, WI 54301

(920) 737-7146

WISCONSIN
JARED G SCHMIDT
39356
HOBART, WI
PROFESSIONAL ENGINEER
7/2/19

SOILS

MANAWA SILTY CLAY LOAM
OSHKOSH SILT LOAM

LEGAL DESCRIPTION

All of Lot 2 of Volume 37 of Certified Survey Maps, Page 99, Map Number 5627, Document Number 1606941, being part of Lot 9 of Morris and Bromley's Subdivision of the South ½ of Private Claim 13, West Side of Fox River, located in part of Private Claims 13 and 14, West Side of Fox River, City of Green Bay, Brown County, Wisconsin.

PARCEL LOCATION

1004 BRETT FAVRE PASS

PARCEL ID

1-1841-C-2

SITE CONDITIONS

1. NO NAVIGABLE WATERWAYS ON-SITE
2. NO WETLANDS ON SITE
3. NO FLOODWAY OR FLOODPLAIN ON-SITE

NO.	DESCRIPTION	DATE

NEW HOTEL DESIGN
THE LEGACY GREEN BAY, LLC
1004 BRETT FARVE PASS GREEN BAY, WI 54304

Robert E. Lee & Associates, Inc.
Engineering | Surveying | Environmental Services
1250 CENTENNIAL CENTRE BOULEVARD
GREEN BAY, WI 54313
920-662-9541 www.releeinc.com

Performa ARCHITECTS + ENGINEERS
124 N. BROADWAY, P.O. BOX 1516
GREEN BAY, WISCONSIN 54305
PHONE: 920-336-9162 FAX: 920-336-2819 www.performainc.com

EXISTING SITE CONDITIONS

REV.

DRAWN	CHK'D
DATE	
SCALE	
DRAWING NO. 1	
PROJECT NO.	REV.

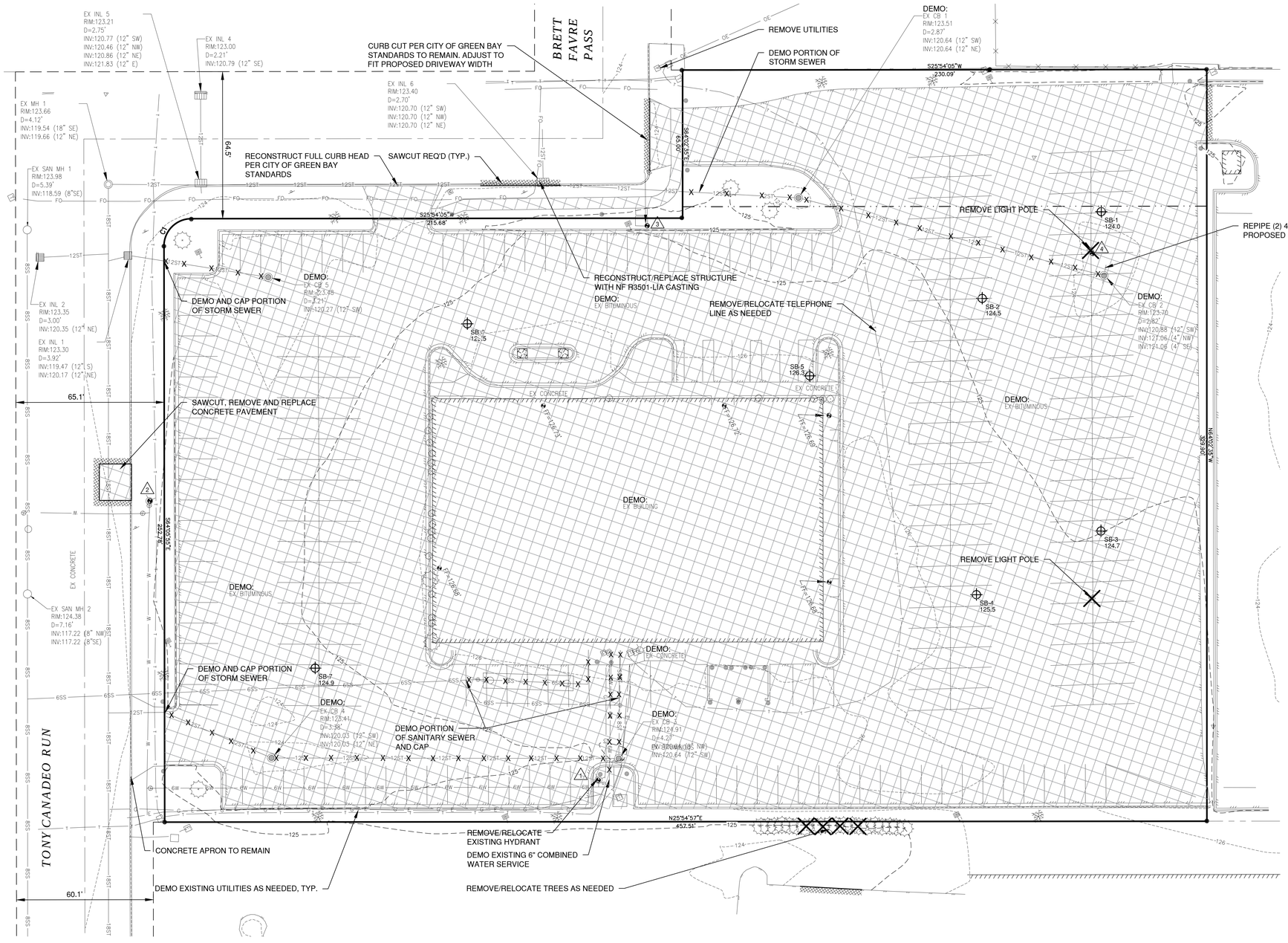

LEGEND

TO BE DEMOLISHED

TREE/SHRUB TO BE REMOVED

DEMOLITION NOTES

1. EXISTING ASPHALT AND BASE COURSE MAY BE PULVERIZED AND STOCKPILED ON SITE FOR FUTURE USE.
2. EXISTING GAS, ELECTRIC, CABLE TELEVISION AND TELEPHONE TO BE REMOVED AND/OR RELOCATED BY OTHERS. WORK SHALL BE COORDINATED BY GENERAL CONTRACTOR.
3. ALL MISCELLANEOUS STRUCTURES SHALL BE REMOVED.
4. DRIVEWAY OPENINGS SHALL BE REMOVED AND CURB OPENINGS SHALL BE CLOSED IN ACCORDANCE WITH STANDARD DETAIL "CURB REMOVAL", SEE DETAIL SHEETS.
5. SAWCUT LINE, SWEEP UP DUST AFTER SAW CUTTING SO FINES DON'T END UP IN STORM SEWER

NORTH

0' 20' 40'

SCALE IN FEET

NO.	DESCRIPTION	DATE

NEW HOTEL DESIGN
THE LEGACY GREEN BAY, LLC
1004 BRETT FARVE PASS GREEN BAY, WI 54304

Robert E. Lee & Associates, Inc.
Engineering | Surveying | Environmental | Ecological
1250 CENTENNIAL CENTRE BOULEVARD
HOBART, WI 54155
920-662-9641 www.releeinc.com

Performa ARCHITECTS + ENGINEERS
124 N. BROADWAY, P.O. BOX 1116
GREEN BAY, WISCONSIN 54305
PHONE: 920-336-9929 FAX: 920-336-2899 www.performainc.com

TITLE: DEMOLITION PLAN

DRAWN	CHK'D
DATE	
SCALE	
DRAWING NO. 2	
PROJECT NO.	REV.

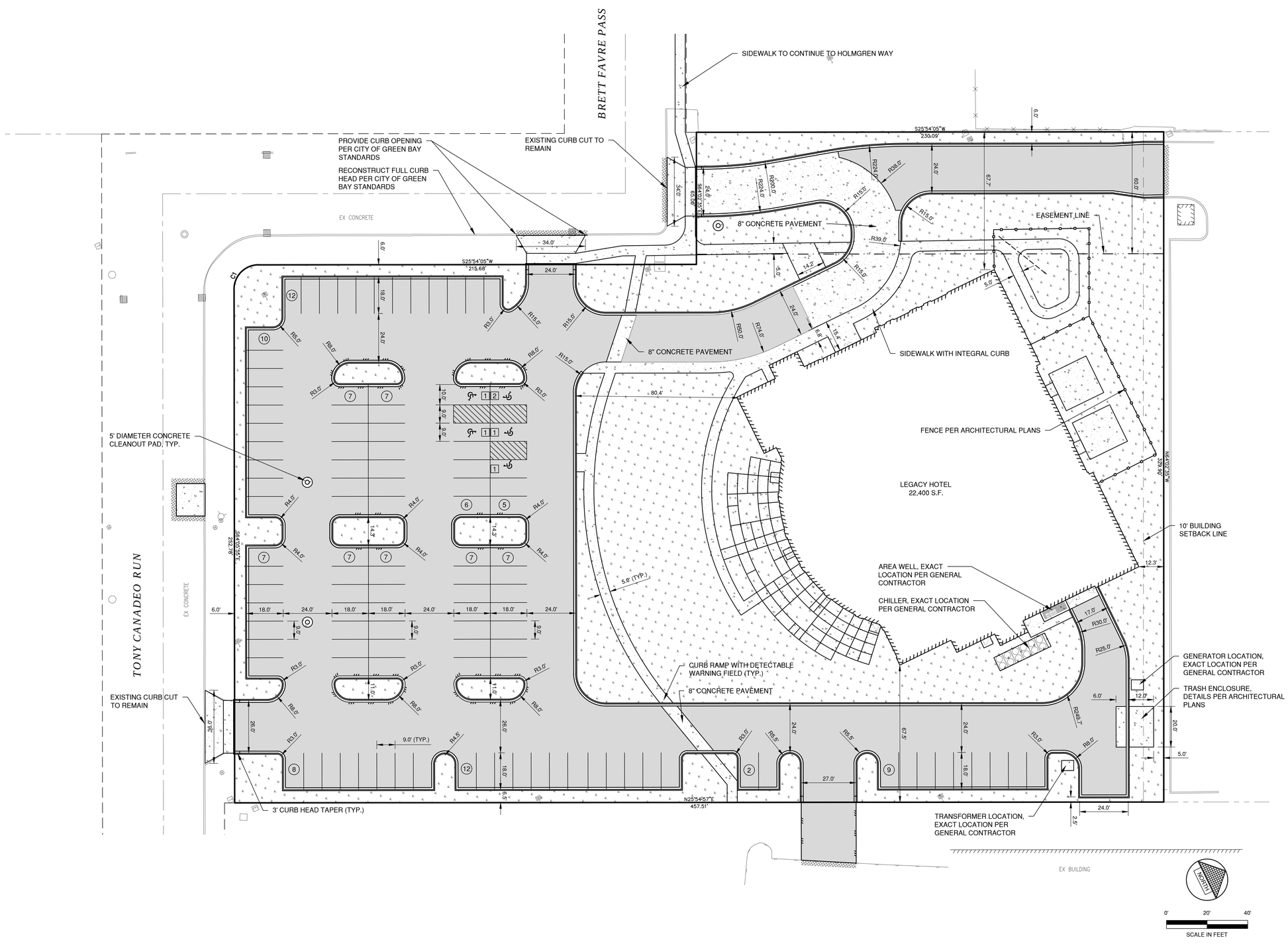

LEGEND

- CONCRETE PAVEMENT
- ASPHALT PAVEMENT (53,386 S.F.)
- LANDSCAPE AREA
- GREEN SPACE
- PROPOSED 18" STANDARD CURB AND GUTTER
- PROPOSED 18" STANDARD SHEDDING CURB AND GUTTER
- TRAFFIC FLOW ARROW
- HANDICAPPED PARKING
- (12) INDICATES NUMBER OF PARKING STALLS

*NOTE: ALL DIMENSIONS ARE TO THE FACE OF CURB, UNLESS NOTED OTHERWISE

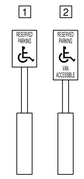

NOTE

1. ALL DISTURBED AREAS SHALL BE TOPSOILED TO A DEPTH OF 6 INCHES, SEEDED AND MULCHED. AREA TO BE RAKED FREE OF STONES AND CLUMPS.
2. SAWCUT LINE, SWEEP UP DUST AFTER SAW CUTTING SO FINES DON'T END UP IN STORM SEWER
3. THE CITY OF GREEN BAY DEPT. OF PUBLIC WORKS MUST BE NOTIFIED (3) WORKING DAYS BEFORE THE START OF ANY CITY STREET CONSTRUCTION WITHIN A PUBLIC RIGHT OF WAY. CONTACT MATT WOICEK PH. (920) 448-3100

PARKING DATA

TOTAL PARKING STALLS PROVIDED = 113

HANDICAP ACCESSIBLE PARKING STALLS = 5

TOTAL PARKING STALLS REQUIRED = 112

1 STALL PER GUEST ROOM X 80 GUEST ROOMS = 80 STALLS

1 STALL PER 100 SQUARE FEET OF RESTAURANT SPACE X 3,200 S.F. = 32 STALLS

SITE DATA

TOTAL AREA = 3.12 ACRES, 136,127 S.F.

BUILDING AREA = 0.51 ACRES, 22,400 S.F. (16.5%)

SIDEWALK/PARKING LOT AREA = 2.07 ACRES, 89,985 S.F. (66.1%)

GREEN SPACE = 0.55 ACRES, 23,742 S.F. (17.4%)

ZONING

PUD

SITE ADDRESS

1004 BRETT FAVRE PASS

CONSTRUCTION CLASSIFICATION

2B, SPRINKLED

PARCEL NO.

1-1841-C-2

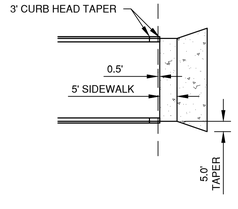

CONCRETE SIDEWALK/APRON DETAIL

NO.	DESCRIPTION	DATE

NEW HOTEL DESIGN
THE LEGACY GREEN BAY, LLC
1004 BRETT FAVRE PASS GREEN BAY, WI 54304

Robert E. Lee & Associates, Inc.
Engineering | Surveying | Environmental | Ecological
1250 CENTENNIAL CENTRE BOULEVARD
HOBART, WI 54155
920 662-9641 www.releeinc.com

Performa ARCHITECTS + ENGINEERS
124 N. BROADWAY, P.O. BOX 1156
GREEN BAY, WISCONSIN 54305-1156
PHONE: 920-336-9909 FAX: 920-336-2889 www.performainc.com

SITE PLAN

2022

DRAWN	CHK'D
DATE	
SCALE	
DRAWING NO. 3	
PROJECT NO.	REV.

File: B:\34600\34390\11\dwg\34390110.dwg
Plot Date: Jul 03, 2019 - 9:35am

BRETT FAVRE PASS

TONY CANADEO RUN

TRANSITION POINT

18" STANDARD SHEDDING CURB AND GUTTER (TYP.)

18" STANDARD CURB AND GUTTER (TYP.)

TRANSITION POINT

EX CONCRETE

S25°54'05"W
230.09'

S64°02'55"E
63.00'

S25°54'05"W
215.68'

C1

S64°05'55"E
292.78'

N64°02'55"W
329.90'

N25°54'57"E
457.51'

SIDEWALK WITH INTEGRAL CURB

LEGACY HOTEL
22,400 S.F.

EX BUILDING

EX CONCRETE

LEGEND

PROPOSED 18" STANDARD CURB AND GUTTER

PROPOSED 18" STANDARD SHEDDING CURB AND GUTTER

NORTH

0' 20' 40'

SCALE IN FEET

NO.	DESCRIPTION	DATE

NEW HOTEL DESIGN
THE LEGACY GREEN BAY, LLC
1004 BRETT FAVRE PASS GREEN BAY, WI 54304

Robert E. Lee & Associates, Inc.
Engineering | Surveying | Environmental | Ecological
1250 CENTENNIAL CENTRE BOULEVARD
HOBART, WI 54155
920 662-9641 www.releinc.com

Performa ARCHITECTS + ENGINEERS
128 N. BROADWAY, P.O. BOX 1156
GREEN BAY, WISCONSIN 54305
PHONE: 920-336-9929 FAX: 920-336-2899 www.performainc.com

CURB DETAIL

TITLE

DRAWN	CHK'D
DATE	
SCALE	
DRAWING NO. 4	
PROJECT NO.	REV.

File: R:\3400\3439\3439111\dwg\3439110.dwg
Plot Date: Jul 03, 2019 - 8:35am

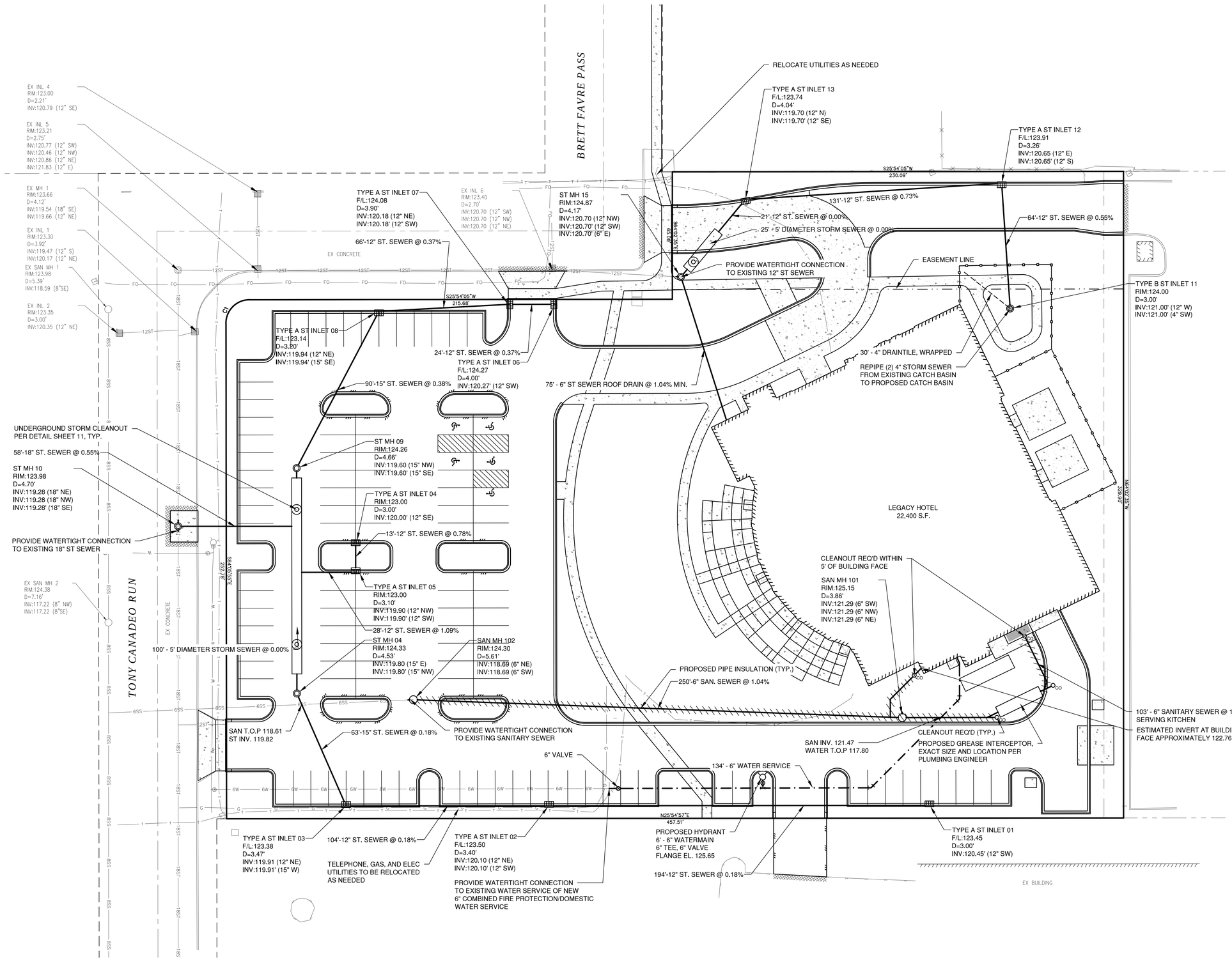

LEGEND

- PROPOSED SANITARY SEWER
- EXISTING SANITARY SEWER (SIZE NOTED)
- PROPOSED STORM SEWER
- EXISTING STORM SEWER (SIZE NOTED)
- PROPOSED WATERMAIN
- EXISTING WATERMAIN (SIZE NOTED)

PROPOSED	EXISTING	
		FIRE HYDRANT
		WATER VALVE/CURB STOP
		WATER MANHOLE
		REDUCER/INCREASER
		SANITARY MANHOLE
		LIFT STATION
		TRACER WIRE SIGNAL CONNECTION BOX
		CLEANOUT
		STORM MANHOLE
		STORM CATCH BASIN
		STORM INLET
		STORM INLET MANHOLE
		YARD DRAIN
		STANDPIPE
		ROOF DOWNSPOUT

PLUMBING DATA

DRAINAGE FIXTURE UNITS = 1,182
WATER FIXTURE UNITS = 1,089

NOTE

1. A MINIMUM OF 6.5 FEET OF COVER SHALL BE MAINTAINED OVER ALL WATERMAIN.
2. SANITARY SEWER, WATERMAIN AND STORM SEWER SHALL BE CONSTRUCTED IN ACCORDANCE WITH THE STANDARD SPECIFICATIONS FOR SEWER AND WATER CONSTRUCTION IN WISCONSIN AND ADMINISTRATIVE CODE CHAPTERS COMM 81-87.
3. FIELD VERIFY LOCATION OF EXISTING UTILITIES. IF EXISTING LOCATIONS DIFFER FROM WHAT IS INDICATED ON THE PLANS, **CONTACT ENGINEER,** PRIOR TO CONTINUED WORK.
4. ALL SANITARY SEWER, STORM SEWER AND WATER SERVICES / MAINS SHALL BE PROVIDED WITH TRACER WIRE OR OTHER METHOD TO BE LOCATED.
5. THE CITY OF GREEN BAY DEPT. OF PUBLIC WORKS MUST BE NOTIFIED (3) THREE WORKING DAYS BEFORE THE START OF ANY SANITARY OR STORM SEWER CONSTRUCTION WITHIN A PUBLIC RIGHT OF WAY OR EASEMENT. CONTACT MATT WOICEK PH. (920) 448-3100.
6. UNDERGROUND PIPE ANCHORING AND SUPPORT DESIGN PER UTILITY CONTRACTOR.

NORTH

0' 20' 40'
SCALE IN FEET

NO.	DESCRIPTION	DATE

NEW HOTEL DESIGN
THE LEGACY GREEN BAY, LLC
1004 BRETT FAVRE PASS GREEN BAY, WI 54304

Robert E. Lee & Associates
Engineering | Surveying | Environmental | Ecological
1250 CENTENNIAL CENTRE BOULEVARD
HOBART, WI 54155
920 662-9641 www.releelnc.com

Performa ARCHITECTS + ENGINEERS
124 N. BROADWAY P.O. BOX 1156
GREEN BAY, WISCONSIN 54305
PHONE: 920-336-9929 FAX: 920-336-2899 www.performainc.com

UTILITY PLAN

TITLE	
DRAWN	CHK'D
DATE	
SCALE	
DRAWING NO.	5
PROJECT NO.	REV.

File: R:\3400\3439\3439011\dwg\3439011D.dwg
Plot Date: Jul 03, 2019 - 8:37pm

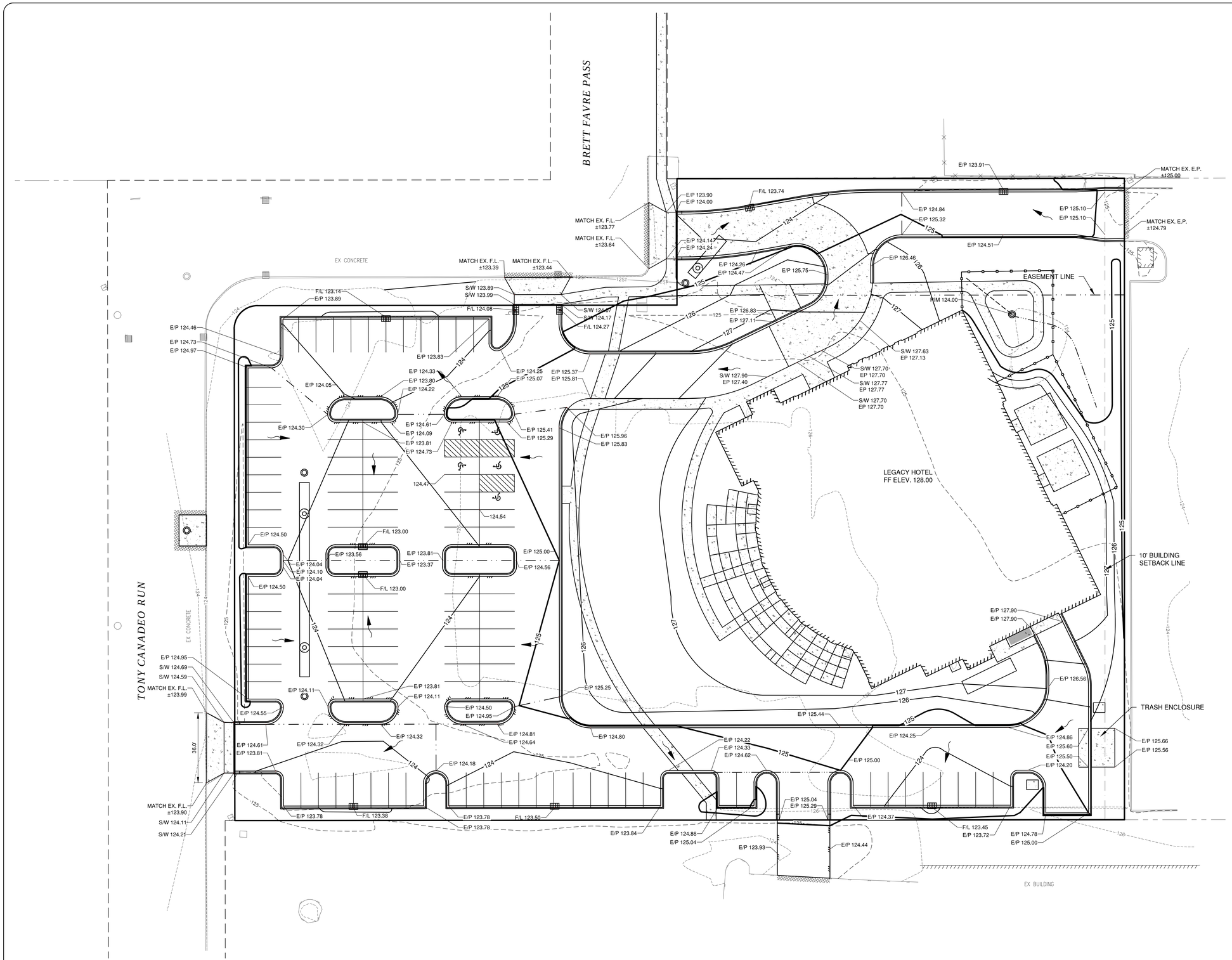

LEGEND

T/C 999.99	TOP OF CURB ELEVATION
F/L 888.88	FLOW LINE ELEVATION
S/W 666.66	TOP OF SIDEWALK ELEVATION
E/P 555.55	EDGE OF PAVEMENT ELEVATION
R/W 444.44	TOP OF RETAINING WALL ELEVATION
333.33	GROUND ELEVATION
	DRAINAGE SWALE
	DRAINAGE DIVIDE
	FLOW ARROW

NORTH

0' 20' 40'

SCALE IN FEET

NO.	DESCRIPTION	DATE

NEW HOTEL DESIGN
THE LEGACY GREEN BAY, LLC

1004 BRETT FAVRE PASS GREEN BAY, WI 54304

Robert E. Lee & Associates, Inc.
Engineering | Surveying | Environmental | Ecological
1250 CENTENNIAL CENTRE BOULEVARD
HOBART, WI 54155
920 662-9641 www.releeinc.com

Performa ARCHITECTS + ENGINEERS
138 N. BROADWAY P.O. BOX 5156
DE PERE, WISCONSIN 54115
PHONE: 920-336-9909 FAX: 920-336-2899 www.performainc.com

GRADING PLAN

TITLE

DRAWN	CHK'D
DATE	
SCALE	
DRAWING NO. 6	
PROJECT NO.	REV.

File: R:\3400\3439\3439011\dwg\3439010.dwg
Plot Date: Jul 03, 2019 - 8:42am

BRETT FAVRE PASS

TONY CANADEO RUN

BARRICADE, NOT A CONSTRUCTION ENTRANCE, ADD TRACKING PAD IF USED FOR ACCESS

SILT FENCE REQ'D. (TYP.)

INLET PROTECTION REQ'D. TYPE "D" (TYP.)

TRACKING PAD (TYP.) REQUIRED AT ALL CONSTRUCTION INGRESS / EGRESS ACCESS POINTS. FULL WIDTH OF ACCESS . (TYP.)

EMAT REQ'D ON ALL 4:1 OR STEEPER SLOPES

LEGACY HOTEL 23,154 S.F.

EASEMENT LINE

10' BUILDING SETBACK LINE

TRASH ENCLOSURE

EX CONCRETE

EX BUILDING

S25°54'05"W 230.09'

S25°54'05"W 215.68'

N25°54'57"E 242.51'

N64°00'55"W 326.00'

S64°00'55"E 252.72'

S64°00'55"E 65.00'

LEGEND

- DRAINAGE SWALE
- DRAINAGE DIVIDE
- FLOW ARROW
- SILT FENCE (PER WDNR TECHNICAL STANDARD 1056)
- DITCH CHECK (PER WDNR TECHNICAL STANDARD 1062)
- TRACKING PAD (PER WDNR TECHNICAL STANDARD 1057)
- EROSION MAT (PER WDNR TECHNICAL STANDARD 1053)
- INLET PROTECTION (PER WDNR TECHNICAL STANDARD 1060)

EROSION CONTROL

ALL EROSION CONTROL PRACTICES INDICATED ON THIS PLAN ARE APPROXIMATE LOCATIONS ONLY. THE ACTUAL SITE MAY REQUIRE MORE OR LESS EROSION CONTROL DEPENDING ON THE CURRENT CONDITION OF THE SITE.

1. SILT FENCE IS REQUIRED DOWNSLOPE OF ANY DISTURBED LAND THAT MAY CARRY SEDIMENTS OFF SITE.
2. A TRACKING PAD IS REQUIRED AT ANY INGRESS/EGRESS LOCATION, WHERE SEDIMENT MAY BE TRACKED OFF-SITE.
3. PROPER INLET PROTECTION SHALL BE USED DEPENDING ON THE INLET TYPE.
4. ALL NECESSARY SITE DEWATERING SHALL BE PERFORMED IN ACCORDANCE WITH WDNR TECHNICAL STANDARD 1061.
5. TYPE 'D' INLET PROTECTION REQUIRED ON FIRST DOWNSTREAM INLETS, BOTH SIDES, ALONG BRETT FAVRE PASS AND TONY CANADEO RUN.

NORTH

0' 20' 40'

SCALE IN FEET

CONSTRUCTION SEQUENCE

1. INSTALL INLET PROTECTION AS IDENTIFIED ON CITY INLETS ALONG BRETT FAVRE PASS AND TONY CANADEO RUN (SEPTEMBER 2019)
2. INSTALL TRACKING PAD. (SEPTEMBER 2019)
3. INSTALL PERIMETER SILT FENCE (SEPTEMBER 2019)
4. DEMO EXISTING BUILDINGS AND UTILITIES (SEPTEMBER 2019)
5. CONSTRUCT UTILITIES, INSTALL EROSION CONTROL AS NEEDED ON NEW UTILITIES (OCTOBER 2019)
6. CONSTRUCT NEW BUILDING AND GRADE PARKING LOT (DECEMBER 2019)
7. PAVE PARKING LOT, POUR CONCRETE SIDEWALKS AND CURB AND GUTTER (AUGUST 2020)
8. FINAL GRADING (OCTOBER 2020) TOPSOIL, SEED AND MULCH. GERMINATION IN SPRING 2021. PROJECT COMPLETION SPRING 2021.

SEQUENCE SUMMARY

THE CONTRACTOR WILL FIRST PUT ALL EROSION CONTROL MEASURES IN PLACE AND THEN DEMO EXISTING BUILDING AND PAVEMENT. THE CONTRACTOR WILL THEN CONSTRUCT NEW UTILITIES AND THE NEW BUILDING. ONCE THE BUILDING ERECTION IS COMPLETE, GRADING AND PAVING OF THE PARKING LOT AND CONCRETE SIDEWALK AND CURB AND GUTTER WILL BE COMPLETED. ONCE PAVEMENT IS DOWN RESTORATION WILL TAKE PLACE TO REPLACE TOPSOIL AND SEED. THE CONTRACTOR CAN THEN REMOVE EROSION CONTROL ONCE THE SITE IS 70% STABALIZED.

NO.	DESCRIPTION	DATE

NEW HOTEL DESIGN
THE LEGACY GREEN BAY, LLC
1004 BRETT FAVRE PASS GREEN BAY, WI 54304

Robert E. Lee & Associates, Inc.
Engineering | Surveying | Environmental | Ecological Services
1250 CENTENNIAL CENTRE BOULEVARD
HOBART, WI 54155
920 662-9641 www.releeinc.com

Performa ARCHITECTS + ENGINEERS
124 N. BROADWAY P.O. BOX 1156
GREEN BAY, WISCONSIN 54305
PHONE: 920-336-9929 FAX: 920-336-2899 www.performaarc.com

EROSION CONTROL PLAN

DRAWN	CHKD
DATE	
SCALE	
DRAWING NO.	7
PROJECT NO.	REV.

File: R:\34501\34501\dwg\34501110.dwg
Plot Date: Jul 03, 2019 - 8:47am

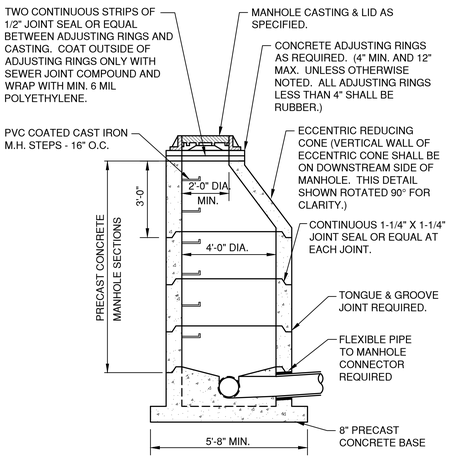

SANITARY AND STORM STANDARD MANHOLE
8"-24" (INCLUSIVE)

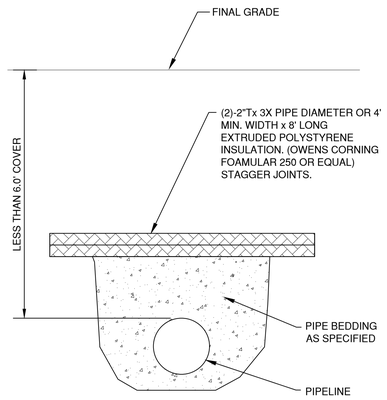

PIPE INSULATION DETAIL

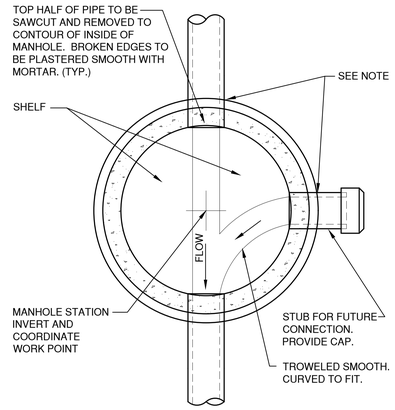

NOTE:
FOR PVC PIPE PROVIDE AN APPROVED FLEXIBLE JOINT.

MANHOLE BASE PLAN
8" - 60" (INCLUSIVE)

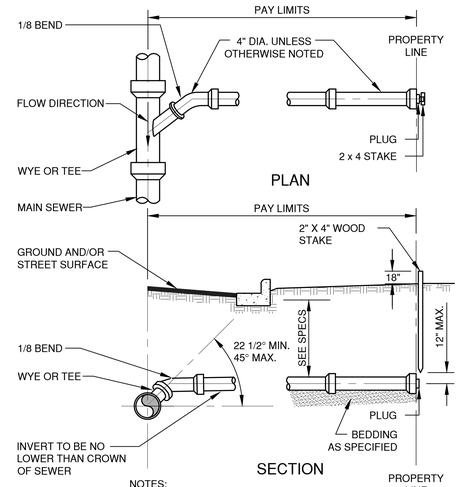

NOTES:
1. SADDLE CONNECTIONS NOT PERMITTED.
2. BACKFILL TO CONFORM TO MAIN SEWER.
3. MINIMUM SLOPE: 1/8 INCH PER FOOT.
4. MAXIMUM SLOPE: 1/2 INCH PER FOOT.

STANDARD SERVICE LATERAL

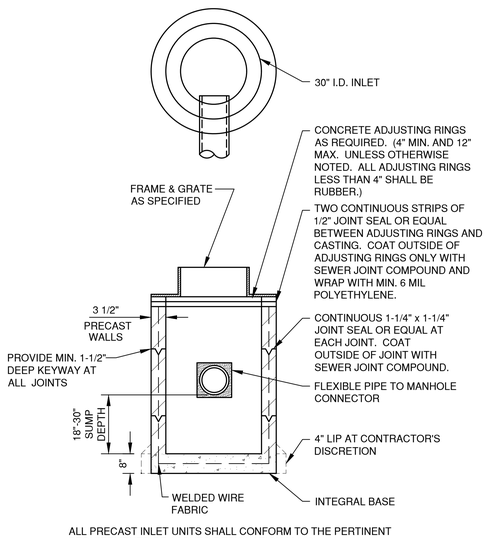

ALL PRECAST INLET UNITS SHALL CONFORM TO THE PERTINENT REQUIREMENTS OF AASHTO DESIGNATION M 199

TYPE 'A' STORM INLET

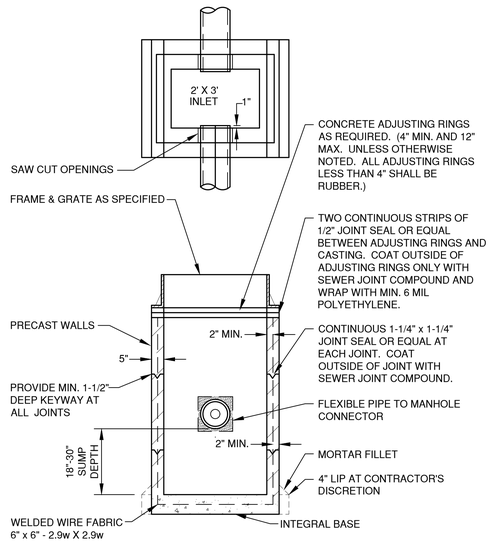

ALL PRECAST INLET UNITS SHALL CONFORM TO THE PERTINENT REQUIREMENTS OF AASHTO DESIGNATION M 199

TYPE 'B' STORM INLET

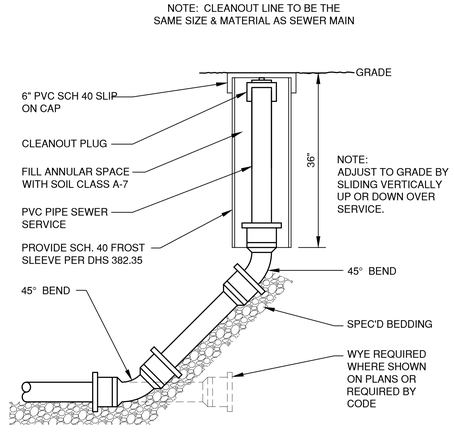

CLEAN-OUT DETAIL
(NON-TRAVELED AREAS)

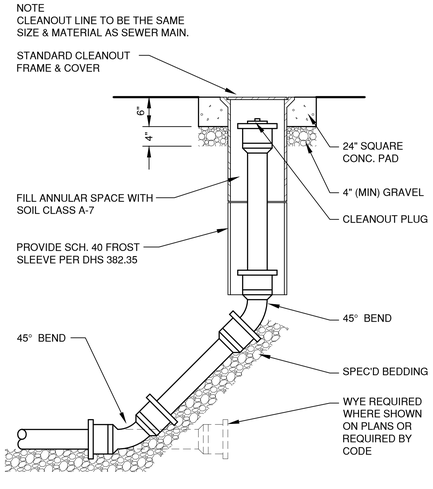

CLEAN-OUT DETAIL
(TRAVELED AREAS)

NO.	DESCRIPTION	DATE

NEW HOTEL DESIGN
THE LEGACY GREEN BAY, LLC
1004 BRETT FARVE PASS GREEN BAY, WI 54304

Robert E. Lee & Associates
Engineering | Surveying | Environmental | Stockbridge
1250 CENTENNIAL CENTRE BOULEVARD
HOBART, WI 54155
920-662-9641 www.releeinc.com

Performa ARCHITECTS + ENGINEERS
124 N. BROADWAY, P.O. BOX 5156
GREEN BAY, WISCONSIN 54307-5156
PHONE: 920-336-9929 FAX: 920-336-2899 www.performa-arc.com

MISCELLANEOUS DETAILS

DRAWN	CHK'D
DATE	
SCALE	
DRAWING NO. 8	
PROJECT NO.	REV.

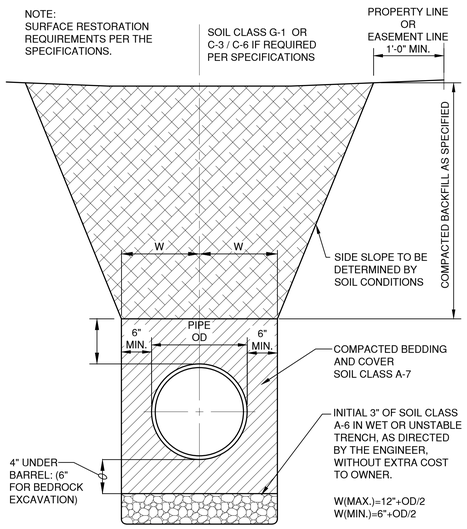

HDPE /PVC SEWER, WATERMAIN AND FORCEMAIN BEDDING AND TRENCH DETAIL

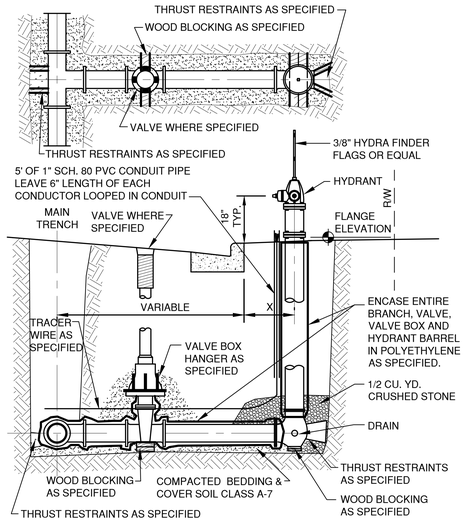

STANDARD HYDRANT SETTING CURB SECTION

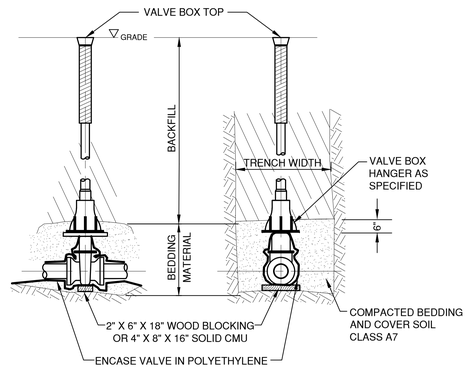

SIDE VIEW FRONT VIEW

VALVE BOX SETTING

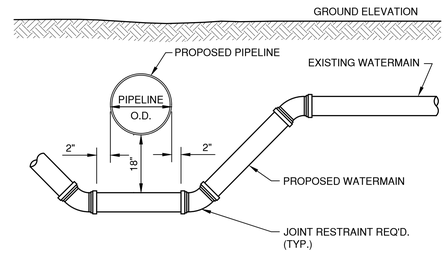

DETAIL FOR WATERMAIN OFFSET

NOTE:
PROVIDE CONTRACTION JOINTS AT MAXIMUM 20' SPACING BY SAW CUTTING OR INSERTION OF DIVIDER PLATES

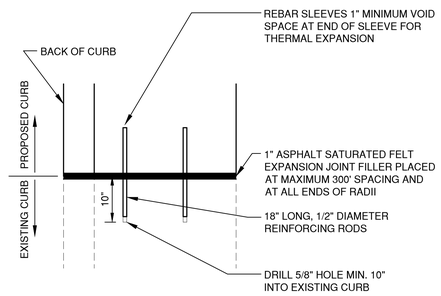

CURB TIE-IN DETAIL

(PROPOSED TO EXISTING)

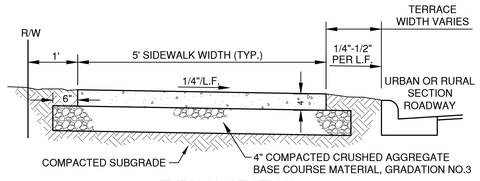

TYPICAL SECTION

NOTE:
REFER TO SPECIFICATIONS FOR REINFORCEMENTS.

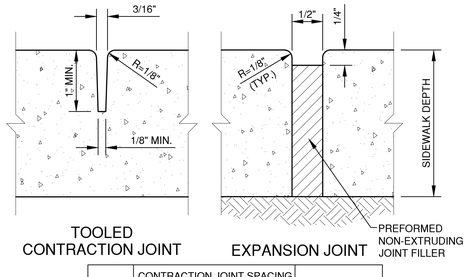

TOOLED CONTRACTION JOINT EXPANSION JOINT

WALK WIDTH	CONTRACTION JOINT SPACING		EXPANSION JOINT SPACING
	TRANSVERSE	LONGITUDINAL	
4'	4'	NOT REQ'D	100' MAX.
5'	5'	NOT REQ'D.	100' MAX.
6'	6'	NOT REQ'D.	100' MAX.
8'	4'	4'	100' MAX.
10'	5'	5'	100' MAX.
12'	6'	6'	100' MAX.

SIDEWALK DETAIL

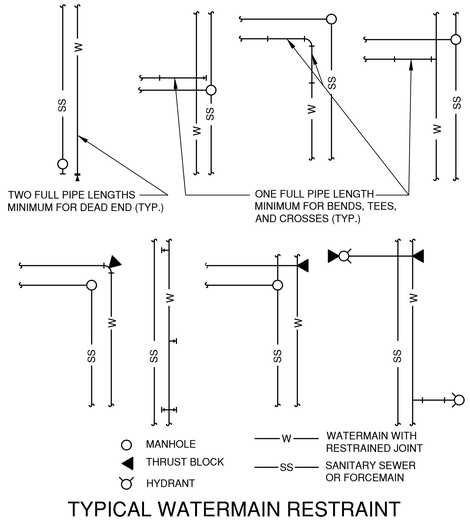

TYPICAL WATERMAIN RESTRAINT REQUIREMENTS FOR COMMON TRENCH CONSTRUCTION

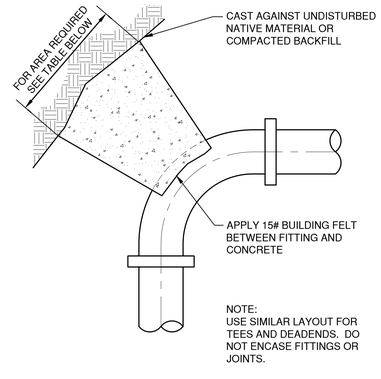

NOTE:
USE SIMILAR LAYOUT FOR TEES AND DEADENDS. DO NOT ENCASE FITTINGS OR JOINTS.

THRUST BLOCK AREA REQUIREMENTS, S.F.					
DEGREE OF BEND	4" PIPE	6" PIPE	8" PIPE	10" PIPE	12" PIPE
5° TO 22.5°	1.0	1.0	2.0	3.0	4.0
23° TO 45°	1.0	2.0	4.0	6.0	8.0
46° TO 90°	2.0	4.0	7.0	11.0	15.0
TEE OR DEAD END	2.0	3.0	5.0	8.0	10.0

TYPICAL THRUST BLOCK

NO.	DESCRIPTION	DATE

NEW HOTEL DESIGN
THE LEGACY GREEN BAY, LLC
1004 BRETT FARVE PASS GREEN BAY, WI 54304

Robert E. Lee & Associates, Inc.
Engineering | Surveying | Environmental | Ecological
1250 CENTENNIAL CENTRE BOULEVARD
HOBART, WI 54155
920-662-9641 www.releeinc.com

Performa ARCHITECTS + ENGINEERS
124 N. BROADWAY, P.O. BOX 5156
GREEN BAY, WISCONSIN 54307-5156
PHONE: 920-336-9925 FAX: 920-336-2899 www.performa-arc.com

MISCELLANEOUS DETAILS

DRAWN	CHK'D
DATE	
SCALE	
DRAWING NO.	9
PROJECT NO.	REV.

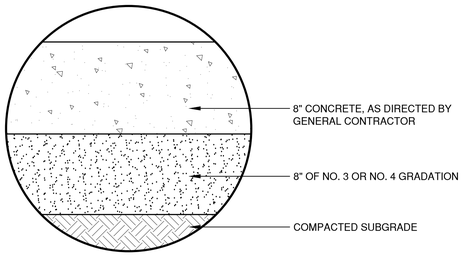

CONCRETE PAVEMENT

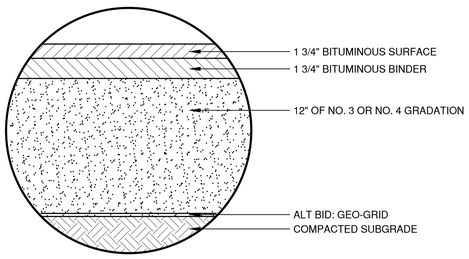

LIGHT DUTY ASPHALT PAVEMENT

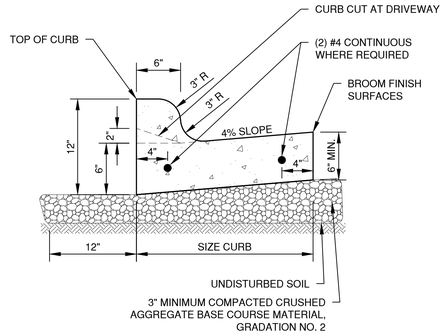

NOTES:
1. PROVIDE 1" EXPANSION JOINTS AT 300' INTERVALS OR AS SPECIFIED. PROVIDE CONTRACTION JOINTS EVERY 30' OR AS DIRECTED.
2. **AT REMOVAL AND REPLACEMENT AREAS** AND AT TIE-INS TO EXISTING CURB AND GUTTER, PROVIDE (2) #5 BARS, 18" LONG. DRILL AND GROUT INTO EXISTING CURB AND GUTTER 9". MATCH EXISTING SLOPE OF EXISTING GUTTER PAN.

STANDARD CURB AND GUTTER

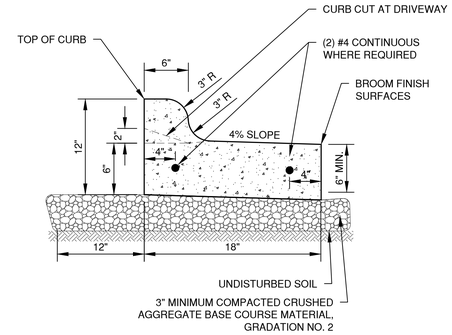

NOTES:
1. PROVIDE 1" EXPANSION JOINTS AT 300' INTERVALS OR AS SPECIFIED. PROVIDE CONTRACTION JOINTS EVERY 30' OR AS DIRECTED.
2. **AT REMOVAL AND REPLACEMENT AREAS** AND AT TIE-INS TO EXISTING CURB AND GUTTER, PROVIDE (2) #5 BARS, 18" LONG. DRILL AND GROUT INTO EXISTING CURB AND GUTTER 9". MATCH EXISTING SLOPE OF EXISTING GUTTER PAN.

SHEDDING CURB AND GUTTER

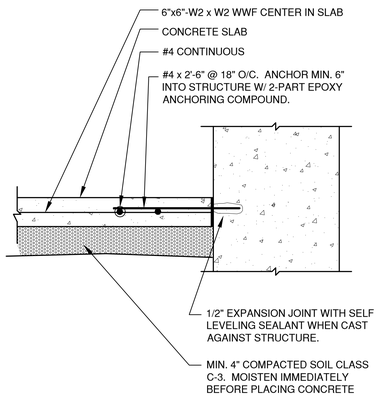

TYPICAL SIDEWALK ADJACENT TO STRUCTURE

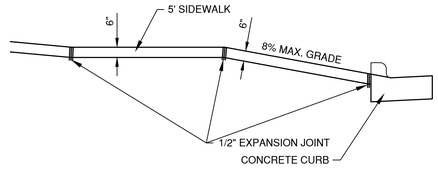

1/2" EXPANSION MATERIAL WILL BE PLACED ON EACH SIDE OF THE DRIVE ABUTTING THE SIDEWALK. SIDEWALK AND DRIVEWAY APRON SHALL BE CONSTRUCTED SEPARATELY UNLESS OTHERWISE APPROVED BY THE DIRECTOR OF PUBLIC WORKS.

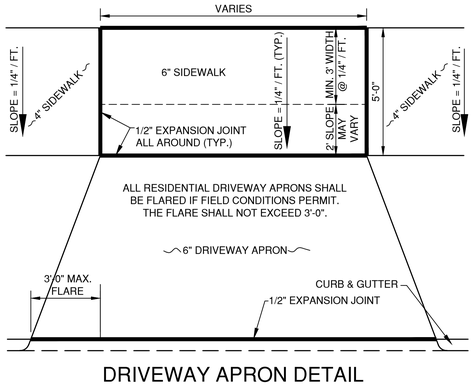

DRIVEWAY APRON DETAIL

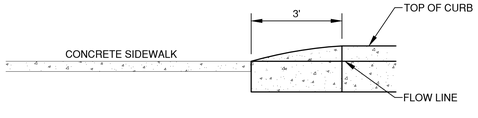

CURB TAPER DETAIL

NO.	DESCRIPTION	DATE

NEW HOTEL DESIGN
THE LEGACY GREEN BAY, LLC
1004 BRETT FARVE PASS GREEN BAY, WI 54304

Robert E. Lee & Associates
Engineering | Surveying | Environmental | Geological
1250 CENTENNIAL CENTRE BOULEVARD
HOBART, WI. 54155
920-662-9641 www.releeinc.com

Performa ARCHITECTS + ENGINEERS
124 N. BRADDAN'S P.O. BOX 1156
DE PERE, WISCONSIN 54115
PHONE: 920-336-9929 FAX: 920-336-2899 www.performaarc.com

MISCELLANEOUS DETAILS

TITLE

DRAWN	CHKD
DATE	
SCALE	
DRAWING NO. 10	
PROJECT NO.	REV.

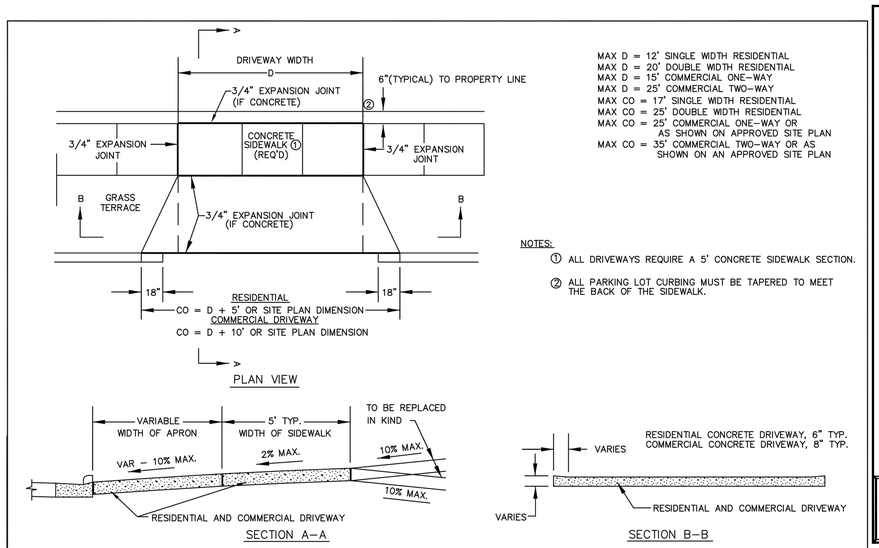

MAX D = 12' SINGLE WIDTH RESIDENTIAL
MAX D = 20' DOUBLE WIDTH RESIDENTIAL
MAX D = 15' COMMERCIAL ONE–WAY
MAX D = 25' COMMERCIAL TWO–WAY
MAX CO = 17' SINGLE WIDTH RESIDENTIAL
MAX CO = 25' DOUBLE WIDTH RESIDENTIAL
MAX CO = 25' COMMERCIAL ONE–WAY OR AS SHOWN ON APPROVED SITE PLAN
MAX CO = 35' COMMERCIAL TWO–WAY OR AS SHOWN ON AN APPROVED SITE PLAN

NOTES:

1. ALL DRIVEWAYS REQUIRE A 5' CONCRETE SIDEWALK SECTION.
2. ALL PARKING LOT CURBING MUST BE TAPERED TO MEET THE BACK OF THE SIDEWALK.

CITY OF GREEN BAY DEPARTMENT OF PUBLIC WORKS ENGINEERING DIVISION	URBAN DRIVEWAY	CREATED: 1/1/04 REVISED: 2/4/08 DETAIL DRAWING NO. 602–D–09

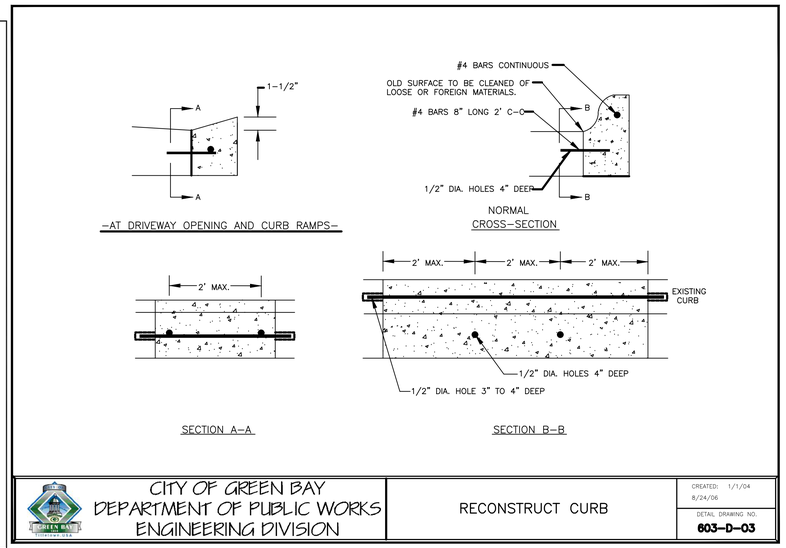

CITY OF GREEN BAY DEPARTMENT OF PUBLIC WORKS ENGINEERING DIVISION	RECONSTRUCT CURB	CREATED: 1/1/04 8/24/06 DETAIL DRAWING NO. 603–D–03

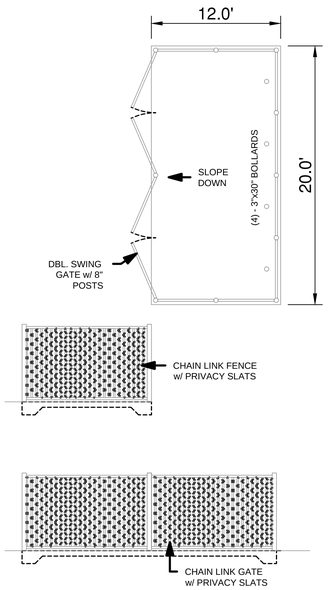

TRASH ENCLOSURE DETAIL

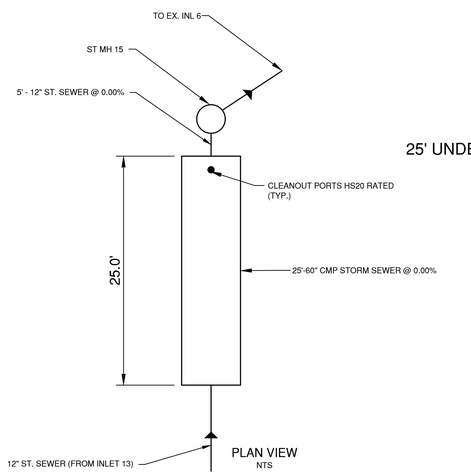

25' UNDERGROUND DETENTION POND DETAIL

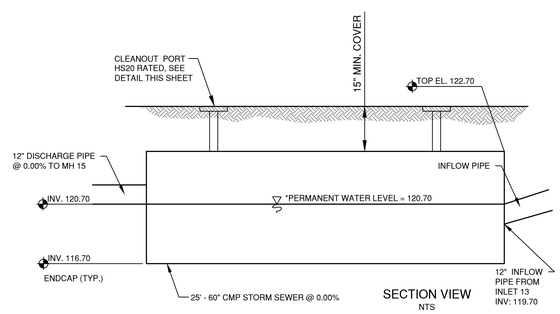

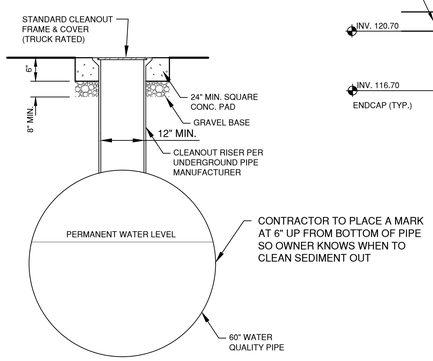

60" PIPE CLEANOUT

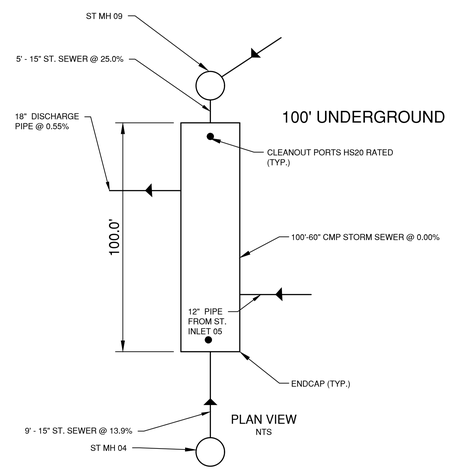

100' UNDERGROUND DETENTION POND DETAIL

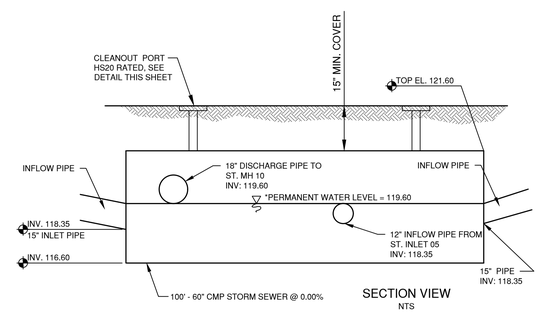

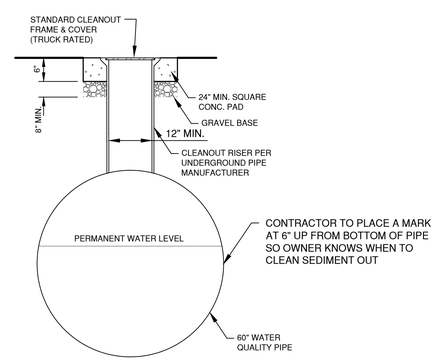

60" PIPE CLEANOUT

NO.	DESCRIPTION	DATE

NEW HOTEL DESIGN
THE LEGACY GREEN BAY, LLC
1004 BRETT FARVE PASS GREEN BAY, WI 54304

Robert E. Lee & Associates, Inc.
Engineering | Surveying | Environmental | Ecological
1250 CENTENNIAL CENTRE BOULEVARD
HOBART, WI 54155
920–662–9641 www.releeinc.com

Performa ARCHITECTS + ENGINEERS
124 N. BROADWAY P.O. BOX 1154
GREEN BAY, WISCONSIN 54305-1154
PHONE: 920-336-9929 FAX: 920-336-2899 www.performaarc.com

MISCELLANEOUS DETAILS

TITLE	
DRAWN	CHKD
DATE	
SCALE	
DRAWING NO.	11
PROJECT NO.	REV.

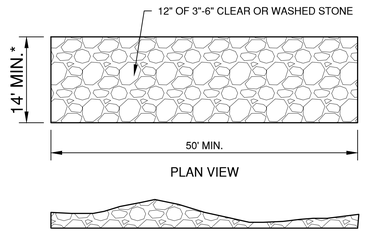

*14' MIN. OR FULL WIDTH OF THE EGRESS POINT. REFERENCE WDNR TECHNICAL STANDARD 1057.

**ON SITES WITH A HIGH WATER TABLE , OR WHERE SATURATED CONDITIONS ARE EXPECTED DURING THE LIFE OF THE PRACTICE, STONE TRACKING PADS SHALL BE UNDERLAIN WITH A WISDOT TYPE "R" GEOTEXTILE FABRIC.

TRACKING PAD DETAIL
(IF APPLICABLE)

INLET PROTECTION NOTES:

INLET PROTECTION DEVICES SHALL BE IN ACCORDANCE WITH WDNR TECHNICAL STANDARD 1060, STORM DRAIN INLET PROTECTION FOR CONSTRUCTION SITES.

MANUFACTURED ALTERNATIVES APPROVED AND LISTED ON THE WDOT PRODUCT ACCEPTABILITY LIST MAY BE SUBSTITUTED.

WHEN REMOVING OR MAINTAINING INLET PROTECTION, CARE SHALL BE TAKEN SO THAT THE SEDIMENT TRAPPED ON THE GEOTEXTILE FABRIC DOES NOT FALL INTO THE INLET. ANY MATERIAL FALLING INTO THE INLET SHALL BE REMOVED IMMEDIATELY.

MAINTENANCE NOTES:

WHEN REMOVING OR MAINTAINING INLET PROTECTION, CARE SHALL BE TAKEN SO THAT THE SEDIMENT TRAPPED IN THE FABRIC DOES NOT FALL INTO THE STRUCTURE. MATERIAL THAT HAS FALLEN INTO THE INLET SHALL BE IMMEDIATELY REMOVED.

INSTALLATION NOTES: TYPE "B" AND "C"

TRIM EXCESS FABRIC IN THE FLOW LINE TO WITHIN 3" OF THE GRATE.

DEMONSTRATE A METHOD OF MAINTENANCE, USING A SEWN FLAP, HAND HOLDS OR OTHER METHOD TO PREVENT ACCUMULATED SEDIMENT FROM ENTERING THE INLET.

TYPE "D"

DO NOT INSTALL INLET PROTECTION TYPE D IN INLETS SHALLOWER THAN 30" MEASURED FROM THE BOTTOM OF THE INLET TO THE TOP OF THE GRATE.

TRIM EXCESS FABRIC IN THE FLOW LINE TO WITHIN 3" OF THE GRATE.

THE INSTALLED BAG SHALL HAVE A MINIMUM SIDE CLEARANCE, BETWEEN THE INLET WALLS AND THE BAG, MEASURED AT THE BOTTOM OF THE OVERFLOW HOLES, OF 3". WHERE NECESSARY, CINCH THE BAG, USING PLASTIC ZIP TIES, TO ACHIEVE THE 3" CLEARANCE, THE TIES SHALL BE PLACED AT THE MAXIMUM OF 4" FROM THE BOTTOM OF THE BAG.

NOTES:

1. TAPER BOTTOM OF BAG TO MAINTAIN THREE INCHES OF CLEARANCE BETWEEN THE BAG AND THE STRUCTURE, MEASURED FROM THE BOTTOM OF THE OVERFLOW OPENINGS TO THE STRUCTURE WALL.
2. GEOTEXTILE FABRIC TYPE FF FOR FLAPS, TOP AND BOTTOM OF THE OUTSIDE OF FILTER BAG. FRONT, BACK AND BOTTOM OF FILTER BAG BEING ONE PIECE.
3. FRONT LIFTING FLAP IS TO BE USED WHEN REMOVING AND MAINTAINING FILTER BAG.
4. SIDE FLAPS SHALL BE A MAXIMUM OF TWO INCHES LONG. FOLD THE FABRIC OVER AND REINFORCE WITH MULTIPLE STITCHES.
5. FLAP POCKETS SHALL BE LARGE ENOUGH TO ACCEPT WOOD 2" X 4". THE REBAR, STEEL PIPE, OR WOOD SHALL BE INSTALLED IN THE REAR FLAP AND SHALL NOT BLOCK THE TOP HALF OF THE CURB FACE OPENING.

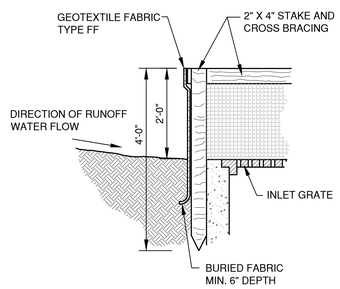

INLET PROTECTION, TYPE A

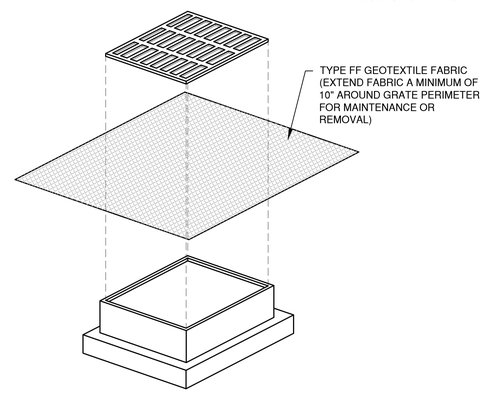

INLET PROTECTION, TYPE B
(WITHOUT CURB BOX)
(CAN BE INSTALLED IN ANY INLET WITHOUT A CURB BOX)

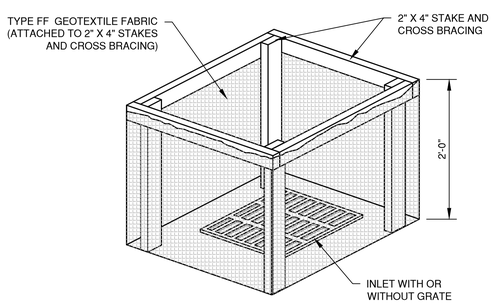

INLET PROTECTION, TYPE A

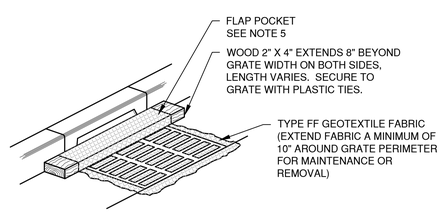

INLET PROTECTION, TYPE C
(WITH CURB BOX)

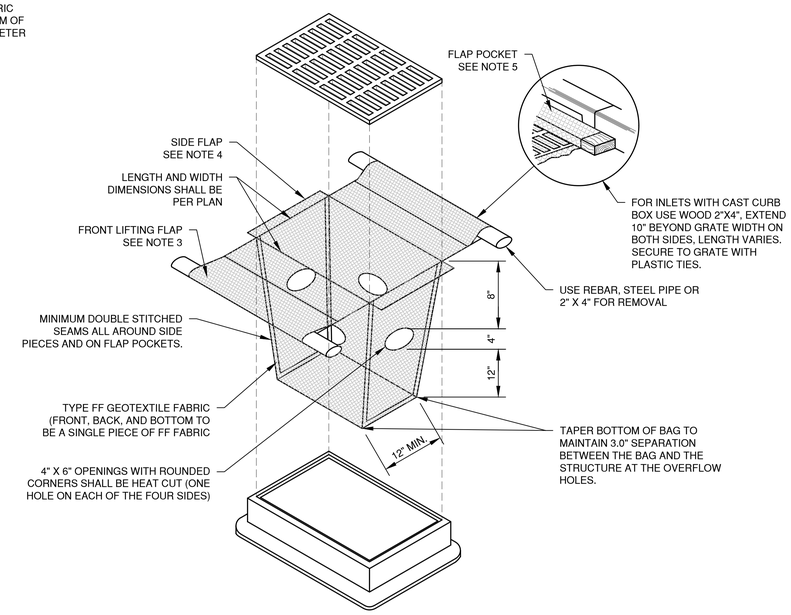

INLET PROTECTION, TYPE D
(CAN BE INSTALLED IN INLETS WITH OR WITHOUT CURB BOXES)

NO.	DESCRIPTION	DATE

NEW HOTEL DESIGN
THE LEGACY GREEN BAY, LLC
1004 BRETT FARVE PASS GREEN BAY, WI 54304

Robert E. Lee & Associates
Engineering | Surveying | Environmental | Ecological
1250 CENTENNIAL CENTRE BOULEVARD
HOBART, WI 54155
920-662-9641 www.releeinc.com

Performa ARCHITECTS + ENGINEERS
124 N. BROADWAY, P.O. BOX 1156
GREEN BAY, WI 54305-1156
PHONE: 920-336-9929 FAX: 920-336-2989 www.performaarc.com

TITLE
EROSION CONROL
INLET PROTECTION
TYPES A, B, C, AND D

DRAWN	CHKD
DATE	
SCALE	
DRAWING NO. 12	
PROJECT NO.	REV.

NOTES:

1. TAPER BOTTOM OF BAG TO MAINTAIN THREE INCHES OF CLEARANCE BETWEEN THE BAG AND THE STRUCTURE, MEASURED FROM THE BOTTOM OF THE OVERFLOW OPENINGS TO THE STRUCTURE WALL.
2. GEOTEXTILE FABRIC TYPE FF FOR FLAPS AND TOP HALF OF FILTER BAG. GEOTEXTILE FABRIC TYPE HR FOR BOTTOM HALF OF FILTER BAG. FRONT, BACK AND BOTTOM OF FILTER BAG BEING ONE PIECE.
3. FRONT LIFTING FLAP IS TO BE USED WHEN REMOVING AND MAINTAINING FILTER BAG.
4. SIDE FLAPS SHALL BE A MAXIMUM OF TWO INCHES LONG. FOLD THE FABRIC OVER AND REINFORCE WITH MULTIPLE STITCHES.
5. FLAP POCKETS SHALL BE LARGE ENOUGH TO ACCEPT WOOD 2" X 4". THE REBAR, STEEL PIPE, OR WOOD SHALL BE INSTALLED IN THE REAR FLAP AND SHALL NOT BLOCK THE TOP HALF OF THE CURB FACE OPENING.

MAINTENANCE NOTES:

WHEN REMOVING OR MAINTAINING INLET PROTECTION, CARE SHALL BE TAKEN SO THAT THE SEDIMENT TRAPPED IN THE FABRIC DOES NOT FALL INTO THE STRUCTURE. MATERIAL THAT HAS FALLEN INTO THE INLET SHALL BE IMMEDIATELY REMOVED.

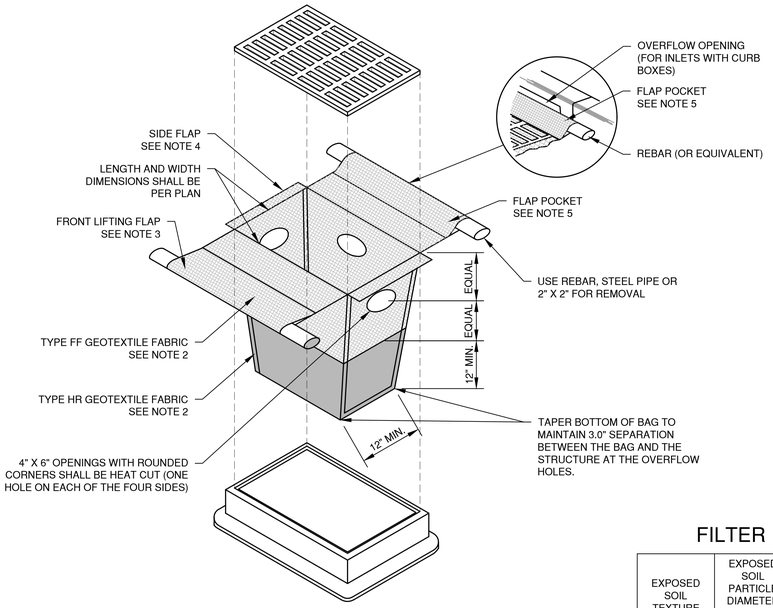

INLET PROTECTION, TYPE D-HR

(CAN BE INSTALLED IN INLETS WITH OR WITHOUT CURB BOXES)

FILTER FABRIC TYPE

EXPOSED SOIL TEXTURE	EXPOSED SOIL PARTICLE DIAMETER (Average) (mm)	FILTER FABRIC TYPE*	RECOMMENDED INLET PROTECTION DEVICE TYPE
COARSE (SAND)	≥0.0625	FF	D, D-M
MEDIUM (SILT LOAM)	0.0624 - 0.005	DF	D, D-M
FINE (CLAY)	≤ 0.004	R	D-M
		HR	D-HR

* DF, R OR HR FILTERS MAY BE USED WHERE FF IS THE REQUIRED MINIMUM STANDARD. R OR HR MAY BE USED WHERE DF IS THE REQUIRED MINIMUM STANDARD.

** FOLLOW DESIGN CRITERIA OF WDNR TECHNICAL STANDARD 1060

NOTES:

1. TAPER BOTTOM OF BAG TO MAINTAIN THREE INCHES OF CLEARANCE BETWEEN THE BAG AND THE STRUCTURE, MEASURED FROM THE BOTTOM OF THE OVERFLOW OPENINGS TO THE STRUCTURE WALL.
2. GEOTEXTILE FABRIC TYPE FF FOR FLAPS, TOP AND BOTTOM OF OUTSIDE OF FILTER BAG. FRONT, BACK AND BOTTOM OF FILTER BAG BEING ONE PIECE.
3. FRONT LIFTING FLAP IS TO BE USED WHEN REMOVING AND MAINTAINING FILTER BAG.
4. SIDE FLAPS SHALL BE A MAXIMUM OF TWO INCHES LONG. FOLD THE FABRIC OVER AND REINFORCE WITH MULTIPLE STITCHES.
5. FLAP POCKETS SHALL BE LARGE ENOUGH TO ACCEPT WOOD 2" X 4". THE REBAR, STEEL PIPE, OR WOOD SHALL BE INSTALLED IN THE REAR FLAP AND SHALL NOT BLOCK THE TOP HALF OF THE CURB FACE OPENING.

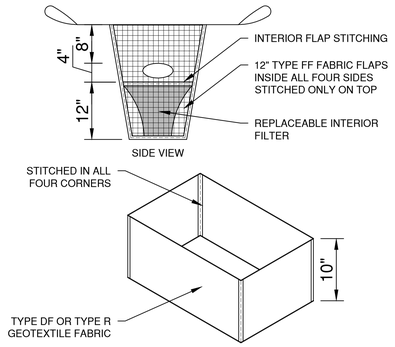

REPLACEABLE INTERIOR FILTER

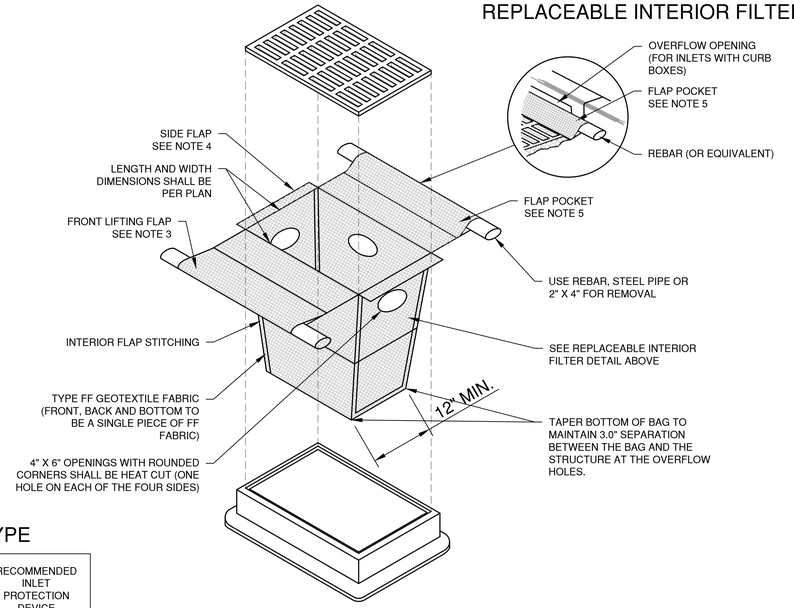

INLET PROTECTION, TYPE D-M

(CAN BE INSTALLED IN INLETS WITH OR WITHOUT CURB BOXES)

NO.	DESCRIPTION	DATE

NEW HOTEL DESIGN
THE LEGACY GREEN BAY, LLC
1004 BRETT FARVE PASS GREEN BAY, WI 54304

Robert E. Lee & Associates, Inc.
Engineering | Surveying | Environmental | Ecological
1250 CENTENNIAL CENTRE BOULEVARD
HOBART, WI 54155
920-662-9641 www.releeinc.com

Performa ARCHITECTS + ENGINEERS
124 N. BROADWAY P.O. BOX 1516
GREEN BAY, WISCONSIN 54305
PHONE: 920-336-9929 FAX: 920-336-2899 www.performainc.com

TITLE
EROSION CONROL
INLET PROTECTION
TYPE D-HR AND TYPE D-M

DRAWN | CHK'D
DATE
SCALE
DRAWING NO. 13
PROJECT NO. | REV.

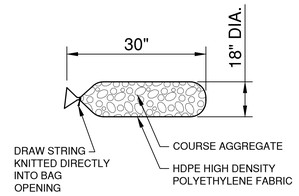

FILTER BAG DETAIL

NOTES:

1. 18" X 30" ROCK FILLED FILTER BAG SHALL BE COMPRISED OF THE FOLLOWING:

   HDPE HIGH DENSITY POLYETHYLENE
   HDPE HIGH DENSITY POLYETHYLENE DRAW STRING KNITTED DIRECTLY INTO BAG OPENING.
   80% FABRIC CLOSURE WITH APPARENT OPENING SIZE NO LARGER THAN 1/8 " X 1/8"
   ROLLED SEAM USING A MINIMUM OF 480 DENIER POLYESTER SEWING YARN FOR STRENGTH AND DURABILITY.

2. USE WELL GRADED COURSE AGGREGATE CONFORMING TO THE FOLLOWING GRADATION REQUIREMENTS

SIEVE SIZE	SIZE NO. AASHTO No. 67 (1)
2 INCH (50 mm)	-
1 1/2 INCH (37.5mm)	-
1 INCH (25.0 mm)	100
3/4 INCH (19.0mm)	90-100
3/8 INCH (9.5mm)	20-55
No. 4 (4.75mm)	0-10
No. 8 (2.36mm)	0-5

(1) SIZE No. ACCORDING TO AASHTO M 43

ROCK FILLED EROSION CONTROL BAGS
TYPE B

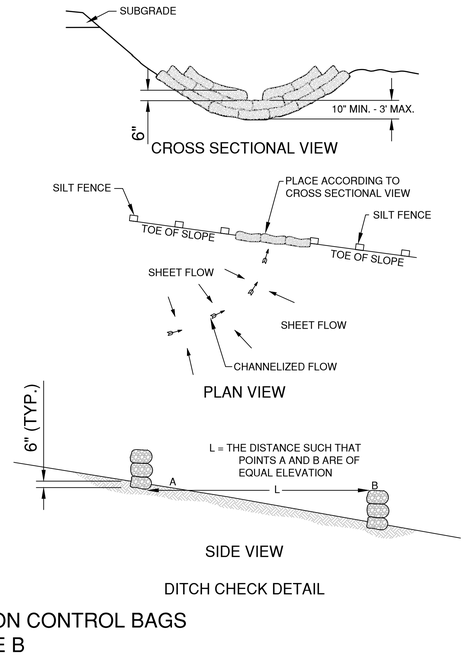

DITCH CHECK DETAIL

DITCH CHECK GENERAL NOTES:

1. DITCH CHECKS SHALL BE CONSTRUCTED IN ACCORDANCE WITH WDNR TECHNICAL STANDARD 1062.
2. AT A MINIMUM, INSTALL ONE DITCH CHECK FOR EVERY 2 FEET OF VERTICAL DROP.
3. DITCH CHECKS SHALL BE PLACED SUCH THAT THE RESULTING PONDING WILL NOT CAUSE AN INCONVENIENCE OR DAMAGE TO ADJACENT AREAS.

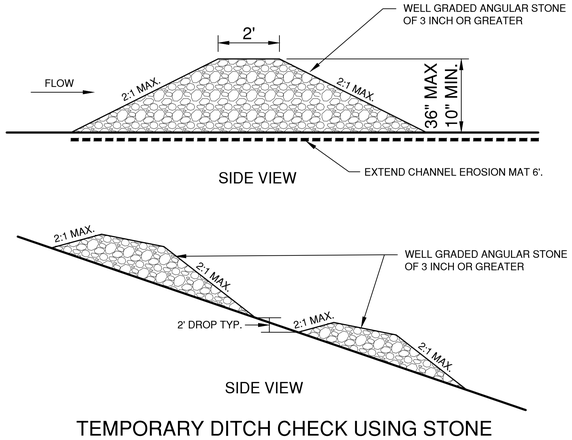

TEMPORARY DITCH CHECK USING STONE
TYPE C

NO.	DESCRIPTION	DATE

NEW HOTEL DESIGN
THE LEGACY GREEN BAY, LLC
1004 BRETT FARVE PASS GREEN BAY, WI 54304

Robert E. Lee & Associates, Inc.
Engineering | Surveying | Environmental | Ecological
1250 CENTENNIAL CENTRE BOULEVARD
HOBART, WI 54155
920-662-9641 www.releeinc.com

Performa ARCHITECTS + ENGINEERS
124 N. BROADWAY, P.O. BOX 518
DE PERE, WISCONSIN 54115
PHONE: 920-336-9929 FAX: 920-336-2899 www.performaarc.com

TITLE
EROSION CONROL
DITCH CHECK DETAILS

DRAWN | CHK'D
DATE
SCALE
DRAWING NO. 14
PROJECT NO. | REV.

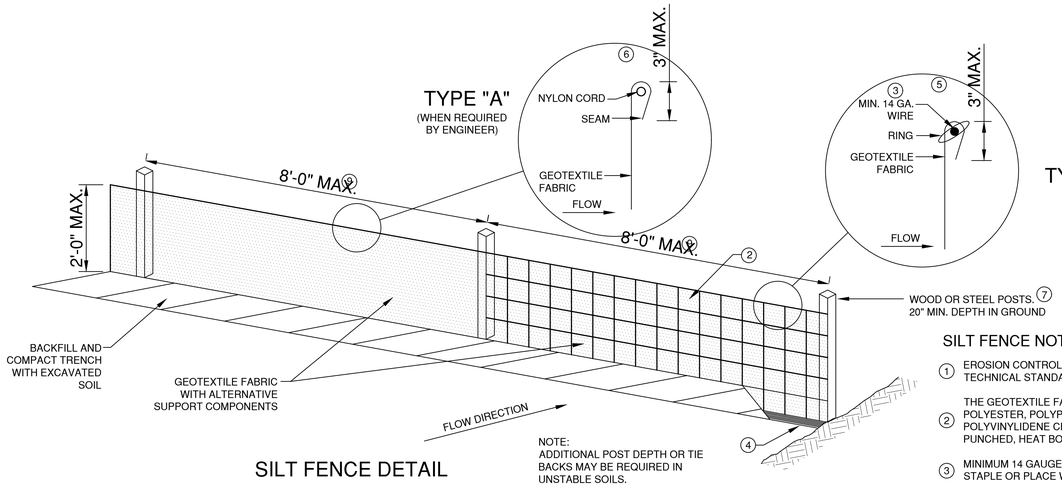

NOTE:
ADDITIONAL POST DEPTH OR TIE BACKS MAY BE REQUIRED IN UNSTABLE SOILS.

SILT FENCE DETAIL

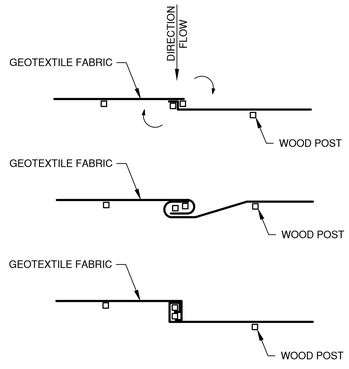

TWIST METHOD 8

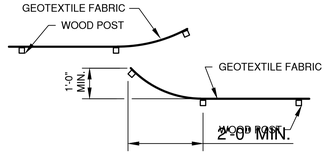

HOOK METHOD 8

JOINING TWO LENGTHS OF SILT FENCE

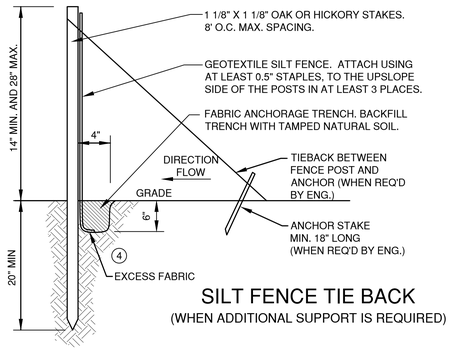

SILT FENCE TIE BACK
(WHEN ADDITIONAL SUPPORT IS REQUIRED)

SILT FENCE NOTES:

1. EROSION CONTROL SHALL BE PROVIDED IN ACCORDANCE WITH WDNR TECHNICAL STANDARD 1056.
2. THE GEOTEXTILE FABRIC CONSISTS OF EITHER WOVEN OR NON-WOVEN POLYESTER, POLYPROPYLENE, STABILIZED NYLON,POLYETHYLENE OR POLYVINYLIDENE CHLORIDE. NON-WOVEN FABRIC MAY BE NEEDLE PUNCHED, HEAT BONDED, RESIN BONDED, OR COMBINATIONS THEREOF.
3. MINIMUM 14 GAUGE WIRE REQUIRED, FOLD FABRIC 3" OVER THE WIRE AND STAPLE OR PLACE WIRE RINGS ON 12" C.C.
4. EXCAVATE A TRENCH A MINIMUM OF 4" WIDE AND 6" DEEP TO BURY AND ANCHOR THE GEOTEXTILE FABRIC. FOLD MATERIAL TO FIT TRENCH AND BACKFILL AND COMPACT TRENCH WITH EXCAVATED SOIL
5. WIRE SUPPORT FENCE SHALL BE 14 GAUGE MINIMUM WOVEN WIRE WITH A MAXIMUM MESH SPACING OF 6". SECURE TOP OF GEOTEXTILE FABRIC TO TOP OF FENCE WITH STAPLES OR WIRE RINGS AT 12" C.C. (TYPE B)
6. GEOTEXTILE FABRIC SHALL BE REINFORCED WITH AN INDUSTRIAL POLYPROPYLENE NETTING WITH A MAXIMUM MESH SPACING OF 3/4" OR EQUAL. A HEAVY DUTY NYLON TOP SUPPORT CORD OR EQUIVALENT IS REQUIRED. (TYPE A)
7. STEEL POSTS SHALL BE 5' LONG WITH A MINIMUM STRENGTH OF 1.33 LBS PER FOOT. WOOD POSTS SHALL BE A MINIMUM SIZE OF 1 1/8" X 1 1/8" OF OAK OR HICKORY. THE POSTS SHALL BE A MINIMUM OF 3' LONG FOR 24" SILT FENCE AND 4' LONG FOR 36" SILT FENCE.
8. CONSTRUCT SILT FENCE FROM A CONTINUOUS ROLL, IF POSSIBLE, BY CUTTING LENGTHS TO AVOID JOINTS. IF A JOINT IS NECESSARY, USE ONE OF THE FOLLOWING TWO METHODS: A.) TWIST METHOD -- OVERLAP THE END POSTS AND TWIST, OR ROTATE, AT LEAST 180 DEGREES, B:) HOOK METHOD -- HOOK THE END OF EACH SILT FENCE LENGTH.
9. THE MAXIMUM SPACING OF POSTS FOR WOVEN FABRIC SILT FENCE SHALL BE 8 FEET AND FOR NON-WOVEN FABRIC, 3 FEET.

BMPs shall be designed, installed, inspected and maintained to control total suspended solids carried in runoff from the construction site as follows. Soil loss prediction tools that estimate the sediment load leaving the construction site under varying land and management conditions, or methodology identified in subch. V. of ch. NR 151, Wis. Adm. Code, shall be used to calculate sediment reduction. The soil loss prediction tool must show that BMPs that, by design, discharge no more than 5 tons per acre per year, or to the maximum extent practicable, of the sediment load carried in runoff from initial grading to final stabilization.

Inspections Schedule from our Ordinance and State Ordinance:

1. Where construction activities have permanently ceased or have temporarily been suspended for more than fourteen days, or when final grades are reached in any portion of the site, stabilization shall be implemented within seven days. When stabilization is not possible due to snow cover, stabilization measures shall be initiated as soon as possible.
2. All erosion and sediment control measures will be checked for stability and operation after a rainfall of 0.5 inches or more, but no less than once every week. Any needed repairs will be made immediately. Written reports will be kept of all erosion and sediment control inspections as required by the Wisconsin Department of Natural Resources.
3. Sediment deposits will be removed from behind the silt fence when deposits reach a depth of ½ inches. The silt fence will be repaired or replaced as necessary to maintain a barrier.
4. All seeded areas will be re-seeded and mulched as necessary to maintain vigorous, dense vegetative cover.
5. Erosion and sediment control practices will not be removed until the site is stabilized and permanent vegetation is planted on disturbed areas.

EROSION CONTROL SHEET FLOW NOTES:

1. ANY SOIL STOCKPILED THAT REMAINS FOR MORE THAN 7 DAYS, SHALL BE COVERED OR TREATED WITH STABILIZATION PRACTICES SUCH AS TEMPORARY OR PERMANENT SEEDING AND MULCHING.
2. A MINIMUM OF 4" OF TOPSOIL MUST BE APPLIED TO ALL AREAS TO BE SEEDED OR SODDED.
3. ALL WASTE AND UNUSED BUILDING MATERIALS (INCLUDING GARBAGE, DEBRIS, CLEANING WASTES, WASTEWATER, TOXIC MATERIALS, OR HAZARDOUS MATERIALS) SHALL BE PROPERLY DISPOSED OF AND NOT ALLOWED TO BE CARRIED OFF-SITE BY RUNOFF OR WIND.
4. ALL OFF-SITE SEDIMENT DEPOSITS OCCURRING AS A RESULT OF CONSTRUCTION WORK OR A STORM EVENT SHALL BE CLEANED UP BY THE END OF EACH DAY. **FLUSHING SHALL NOT BE ALLOWED.**
5. ANY SOIL EROSION THAT OCCURS AFTER FINAL GRADING AND/OR THE APPLICATION OF STABILIZATION MEASURES MUST BE REPAIRED AND THE STABILIZATION WORK REDONE.
6. FOR ANY DISTURBED AREA THAT REMAINS INACTIVE FOR GREATER THAN 7 WORKING DAYS, OR WHERE GRADING WORK EXTENDS BEYOND THE PERMANENT SEEDING DEADLINES, THE SITE MUST BE TREATED WITH TEMPORARY STABILIZATION MEASURES SUCH AS SOIL TREATMENT, TEMPORARY SEEDING AND/OR MULCHING.
7. ALL TEMPORARY EROSION CONTROL PRACTICES SHALL BE MAINTAINED UNTIL THE SITE IS STABILIZED WITH 70% VEGETATION AND A NOTICE OF TERMINATION HAS BEEN APPROVED BY THE WDNR.
8. WIND EROSION SHALL BE KEPT TO A MINIMUM DURING CONSTRUCTION. WATERING, MULCH OR A TACKING AGENT MAY NEED TO BE UTILIZED TO PROTECT NEARBY RESIDENCES/WATER RESOURCES.
9. CONTRACTOR IS RESPONSIBLE FOR MAINTAINING ALL THE EROSION CONTROL MEASURES IN CONFORMANCE WITH THE WDNR CONSERVATION PRACTICE STANDARDS LATEST EDITION.
10. UPON COMPLETION OF STORM INLET CONSTRUCTION, INSTALL STORM DRAIN INLET PROTECTION FOR CONSTRUCTION SITE AS SPECIFIED.
11. FINE SEDIMENT ACCUMULATIONS SHALL BE CLEANED FROM STREETS, PRIVATE DRIVES, OR PARKING AREAS BY MANUAL OR MECHANICAL SWEEPING A MINIMUM OF ONCE A WEEK AND BEFORE ALL IMMINENT RAINS
12. EROSION AND SEDIMENT CONTROL STRUCTURES SHALL BE INSPECTED WEEKLY AND WITHIN 24 HOURS OF RAINFALL OF 0.5" OR MORE.

NO.	DESCRIPTION	DATE

NEW HOTEL DESIGN
THE LEGACY GREEN BAY, LLC
1004 BRETT FARVE PASS GREEN BAY, WI 54304

Robert E. Lee & Associates, Inc.
Engineering | Surveying | Environmental | Ecological
1250 CENTENNIAL CENTRE BOULEVARD
HOBART, WI 54155
920-662-9641 www.releinc.com

Performa ARCHITECTS + ENGINEERS
124 N. BROADWAY, P.O. BOX 1156
GREEN BAY, WISCONSIN 54305
PHONE: 920-336-9925 FAX: 920-336-2899 www.performa-aei.com

EROSION CONROL
SHEET FLOW DETAILS

TITLE

DRAWN	CHK'D
DATE	
SCALE	
DRAWING NO. 15	
PROJECT NO.	REV.

* TRACKOUT CONTROL TO BE PROVIDED PER DETAILS BELOW AND IN ACCORDANCE WITH WDNR TECHNICAL STANDARD 1057

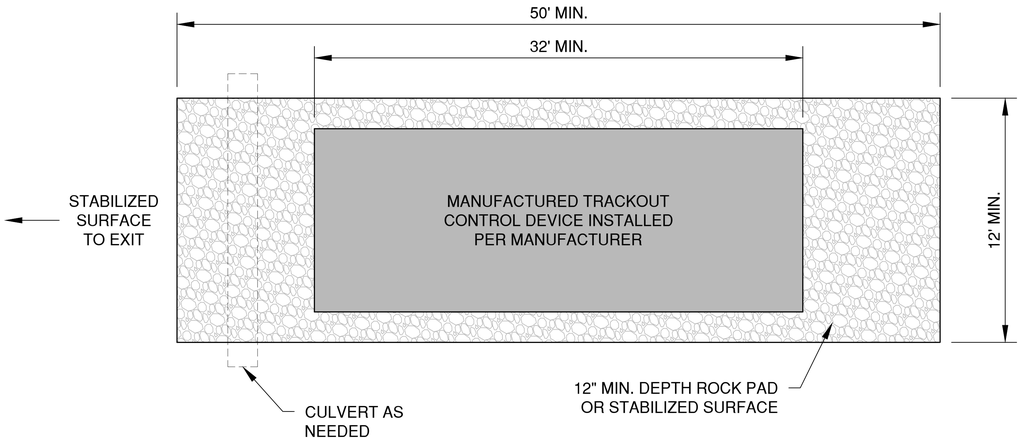

PLAN VIEW
(NTS)

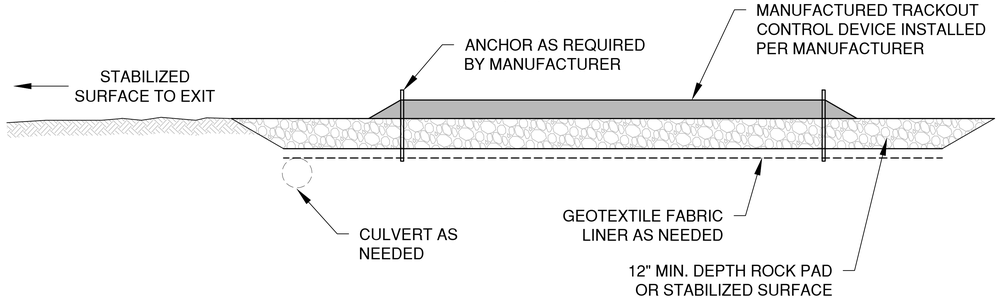

SECTION VIEW

NOTES:

1. THIS DETAIL IS PROVIDED AS AN EXAMPLE. COMPLY WITH MANUFACTURER'S SPECIFICATIONS WHILE ALSO MEETING THE MINIMUM MANUFACTURED TRACKING PAD LENGTH AND WIDTH DESCRIBED IN THIS TECHNICAL STANDARD.
2. INSTALL SUCH THAT RUNOFF FLOWS TO AN APPROVED TREATMENT PRACTICE.
3. A THINNER STONE LAYER OR OTHER STABLE SURFACE MAY BE ACCEPTABLE SUCH THAT RUTTING IS MINIMIZED AS VEHICLES MOUNT OR DISMOUNT FROM THE MANUFACTURERS TRACKOUT CONTROL DEVICE.
4. SELECT FABRIC TYPE BASED ON SOIL CONDITIONS AND VEHICLES LOADING.
5. DIRECT ALL EXISTING VEHICLES OVER MANUFACTURED TRACKOUT CONTROL DEVICE. STONE TRACKING PAD INSTALLATION ACROSS REMAINING ACCESS WIDTH IS RECOMMENDED. A 12' MINIMUM CAN BE USED WHEN EXITING TRAFFIC IS RESTRICTED TO A DEDICATED EGRESS LANE.
6. IF MINIMUM INSTALLATION LENGTH IS NOT POSSIBLE DUE TO SITE GEOMETRY, INSTALL THE MAXIMUM LENGTH PRACTICABLE AND SUPPLEMENT WITH ADDITIONAL PRACTICES AS NEEDED.
7. ACCOMMODATE EXITING VEHICLES IN EXCESS OF MANUFACTURED TRACKOUT CONTROL DEVICE WEIGHT CAPACITY WITH OTHER TREATMENT PRACTICES.

MANUFACTURED TRACKOUT CONTROL DETAIL

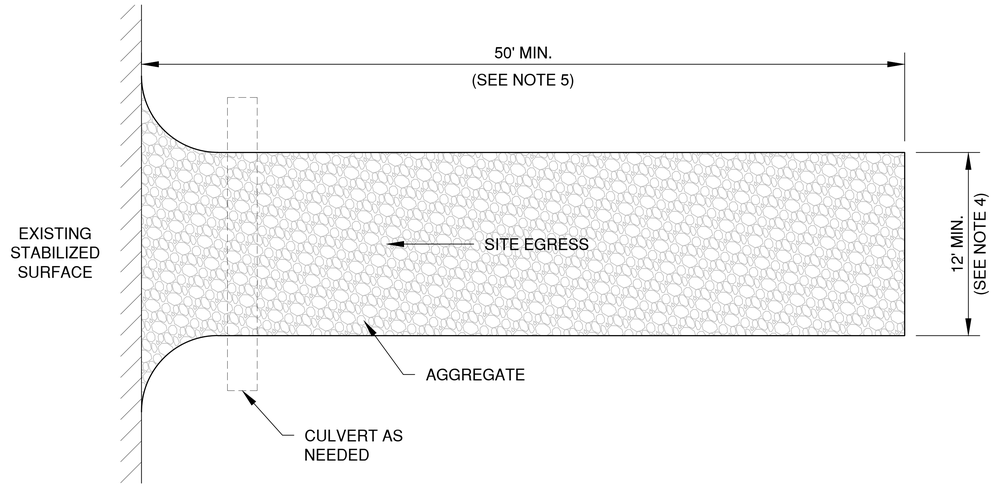

PLAN VIEW
(NTS)

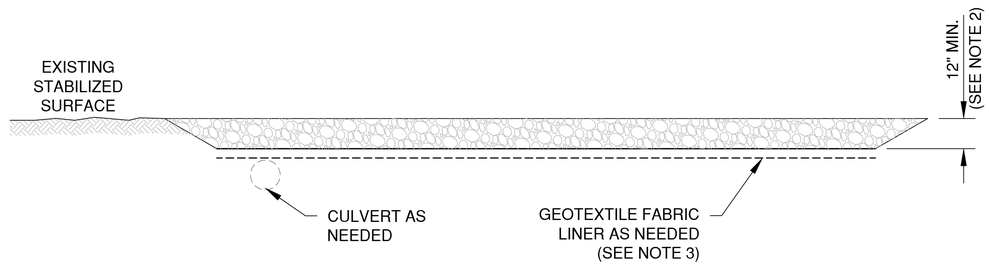

SECTION VIEW

NOTES:

1. USE HARD, DURABLE, ANGULAR STONE OR RECYCLED CONCRETE, MEETING THE FOLLOWING GRADATION:

SIEVE SIZE:	PERCENT BY WEIGHT PASSING:
3"	100
2 1/2"	90-100
1 1/2"	25-60
3/4"	0-20
3/8"	0-5

2. SLOPE THE STONE TRACKING PAD IN A MANNER TO DIRECT RUNOFF TO AN APPROVED TREATMENT PRACTICE.
3. SELECT FABRIC TYPE BASED ON SOIL CONDITIONS AND VEHICLES LOADING.
4. INSTALL TRACKING PAD ACROSS FULL WIDTH OF THE ACCESS POINT, OR RESTRICT EXISTING TRAFFIC TO A DEDICATED EGRESS LANE AT LEAST 12 FEET WIDE ACROSS THE TOP OF THE PAD.
5. IF A 50' PAD LENGTH IS NOT POSSIBLE DUE TO SITE GEOMETRY, INSTALL THE MAXIMUM LENGTH PRACTICABLE AND SUPPLEMENT WITH ADDITIONAL PRACTICES AS NEEDED.

STONE TRACKING PAD DETAIL

NO.	DESCRIPTION	DATE

NEW HOTEL DESIGN
THE LEGACY GREEN BAY, LLC
1004 BRETT FARVE PASS GREEN BAY, WI 54304

Robert E. Lee & Associates, Inc.
Engineering | Surveying | Environmental | Ecological
1250 CENTENNIAL CENTRE BOULEVARD
HOBART, WI 54155
920-662-9641 www.releinc.com

Performa ARCHITECTS + ENGINEERS
124 N. BROADWAY, P.O. BOX 1156
GREEN BAY, WISCONSIN 54305
PHONE: 920-336-9920 FAX: 920-336-2890 www.performaarc.com

EROSION CONROL
TRACK CONTROL PRACTICES

DRAWN	CHKD
DATE	
SCALE	
DRAWING NO. 16	
PROJECT NO.	REV.

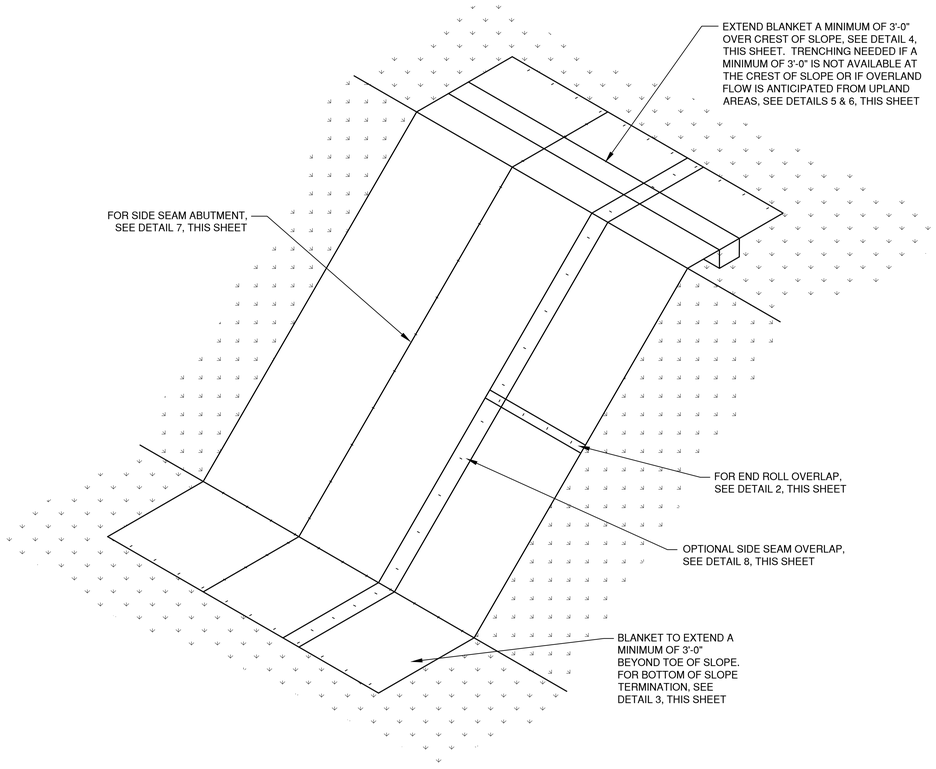

SLOPE DETAIL 1/XX

SLOPE CREST ANCHOR METHOD "A" (NO TRENCH) 4/XX

DO NOT NEED TO TRENCH BLANKET IN IF IT CAN BE EXTENDED A MINIMUM OF 3'-0" OVER THE CREST OF THE SLOPE.

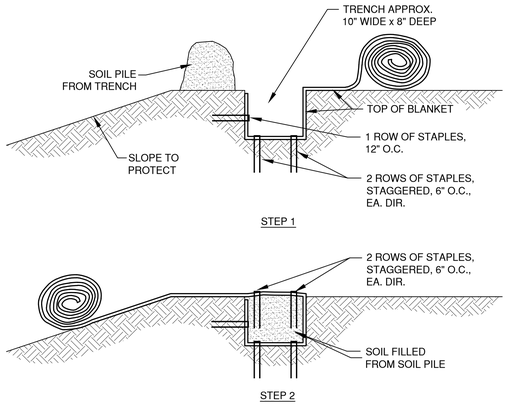

SLOPE TRENCHING METHOD "B" 5/XX

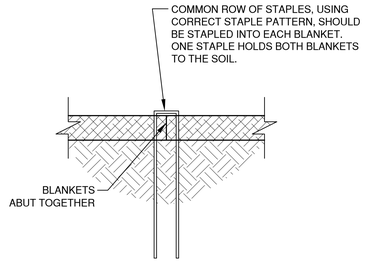

SIDE SEAM ABUT STAPLE DETAIL 7/XX

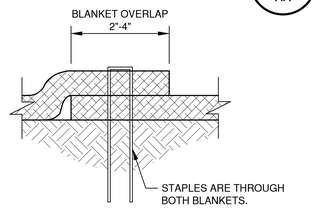

SIDE SEAM OVERLAP STAPLE DETAIL 8/XX

NOTES:

1. STAPLE PATTERNS ARE DEPENDENT ON SITE CONDITIONS. SEE MANUFACTURER STAPLE PATTERN GUIDE FOR DETAILS.

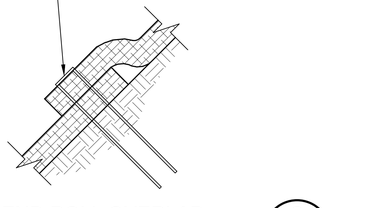

END ROLL OVERLAP 2/XX

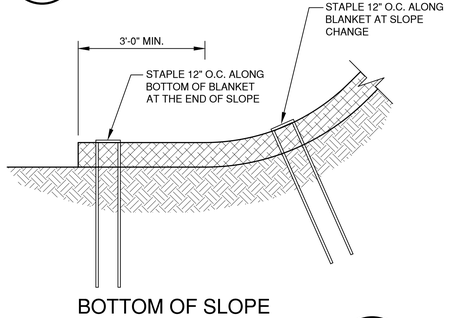

BOTTOM OF SLOPE TERMINATION 3/XX

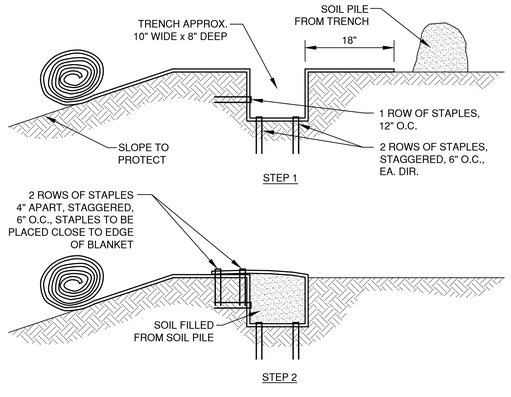

SLOPE TRENCHING METHOD "C" 6/XX

NO.	DESCRIPTION	DATE

NEW HOTEL DESIGN
THE LEGACY GREEN BAY, LLC
1004 BRETT FARVE PASS GREEN BAY, WI 54304

Robert E. Lee & Associates, Inc.
Engineering | Surveying | Environmental | Ecological
1250 CENTENNIAL CENTRE BOULEVARD
HOBART, WI 54155
920-662-9641 www.releeinc.com

Performa ARCHITECTS + ENGINEERS
124 N. BROADWAY, P.O. BOX 1156
GREEN BAY, WISCONSIN 54305
PHONE: 920-336-0929 FAX: 920-336-2899 www.performaarc.com

SLOPE STABILITY DETAIL

TITLE

DRAWN	CHK'D
DATE	
SCALE	
DRAWING NO. 17	
PROJECT NO.	REV.

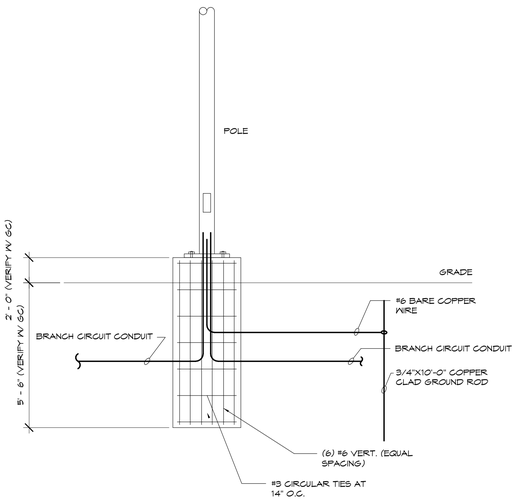

POLE BASE DETAIL

2
ES1.0
SCALE: 12" = 1'-0"

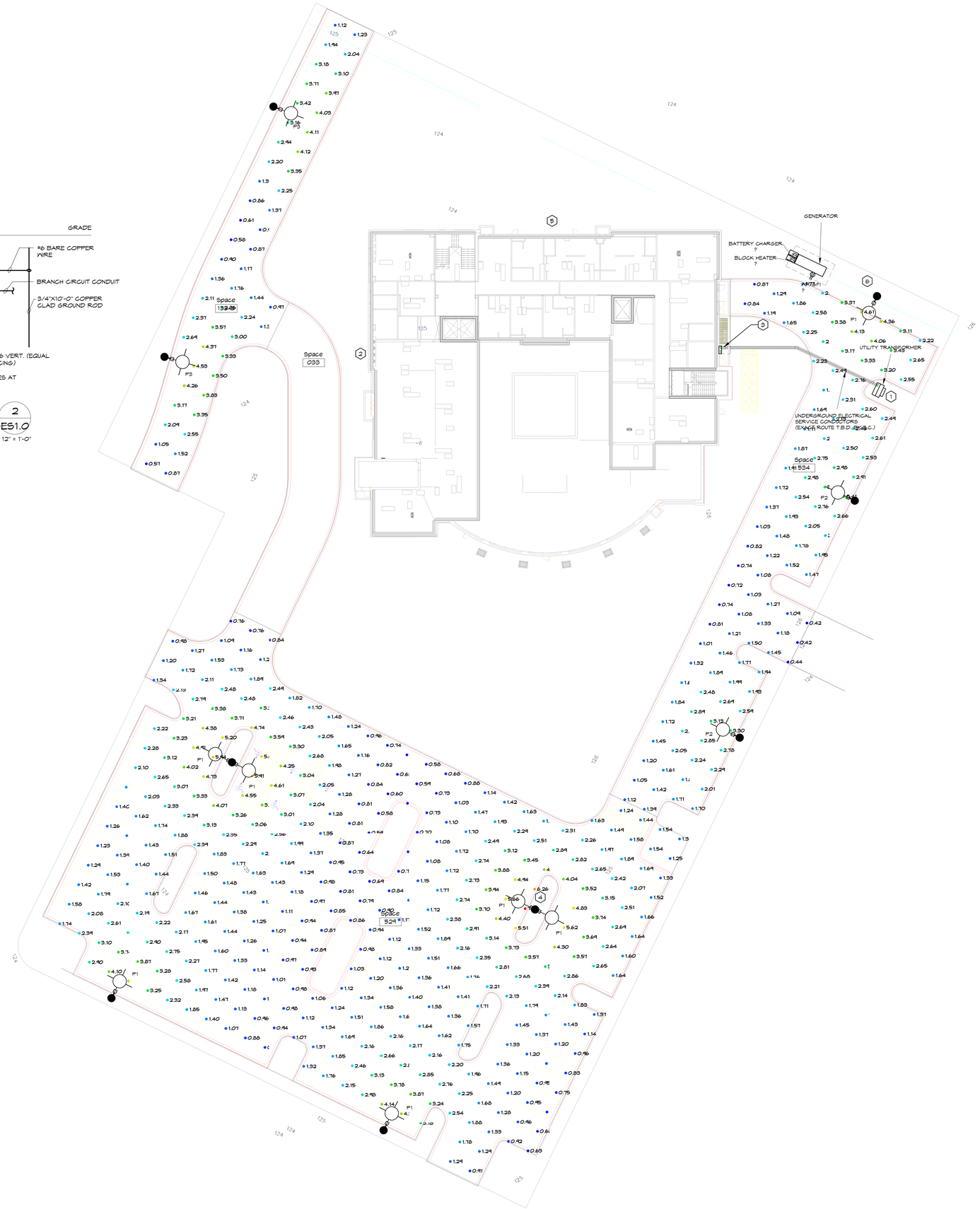

SITE PLAN GENERAL NOTES:

1. COORDINATE LOCATIONS OF ALL UNDERGROUND CONDUIT, POLES, LIGHTING, MISC ELECTRICAL WITH OTHER DISCIPLINES. REFER TO CIVIL SITE PLANS FOR ADDITIONAL INFORMATION.
2. REFER TO LIGHTING CONTROL PANEL SCHEDULES ON SHEET E4.1 FOR ADDITIONAL SITE LIGHTING CONTROL INFORMATION.
3. FINAL LUMINAIRE CONTROL SCHEDULE FUNCTIONS & PROGRAMMING TO BE CONFIRMED WITH OWNER & A.H.J.

SITE PLAN NOTES:

1. PAD MOUNT UTILITY TRANSFORMER. INSTALL PROTECTIVE BOLLARDS AND MAINTAIN TRANSFORMER CLEARANCES IN ACCORDANCE WITH UTILITY REQUIREMENTS.
2. PROVIDE (4) 4" CONDUIT FROM INSIDE BUILDING STUBBED OUT 5 FEET BEYOND BUILDING PERIMETER FOR COMMUNICATIONS SERVICE. COORDINATE EXACT LOCATION WITH COMMUNICATION SERVICE PROVIDER. COORDINATE WITH CIVIL/SITE PLAN.
3. BUILDING MOUNTED TERMINATION ENCLOSURE AND METERING.
4. REFER TO POLE BASE DETAIL LOCATED ON THIS SHEET FOR ADDITIONAL INFORMATION (TYPICAL).
5. EXTERIOR PHOTOSENSOR MOUNTED ON ROOF. REFER TO SHEET E2.6.
6. PROVIDE NP EMERGENCY BATTERY PACK INSIDE GENERATOR ENCLOSURE. CONNECT TO CIRCUIT EL-XX.
X. PROVIDE CONCRETE POLE BASE AND POLE FOR A FINAL FIXTURE MOUNTING HEIGHT OF 10'-0" AFG. PROVIDE SUITABLE BASE DIAMETER AND DEPTH FOR INSTALLATION.
X. PROVIDE CIRCUIT FOR FLAG POLE LIGHTING. COORDINATE INSTALLATION WITH ARCHITECTURAL & SITE CIVIL.

NOT FOR CONSTRUCTION - 06-27-19

ELECTRICAL SITE PLAN

SCALE: 1" = 20'-0"

NO.	DESCRIPTION	DATE

NEW HOTEL DESIGN
THE LEGACY GREEN BAY, LLC
1004 BRETT FARVE PASS GREEN BAY, WI 54304

Performa ARCHITECTS + ENGINEERS
1241 BROADWAY P.O. BOX 3356
GREEN BAY, WISCONSIN 54304
PHONE: 920.336.9909 FAX: 920.336.2899 www.performainc.com

ELECTRICAL SITE PLAN

DRAWN: Author	CHK'D: checker
DATE: 05/02/19	
SCALE: As indicated	
DRAWING NO.: ES1.0	
PROJECT NO.: 19005	REV.

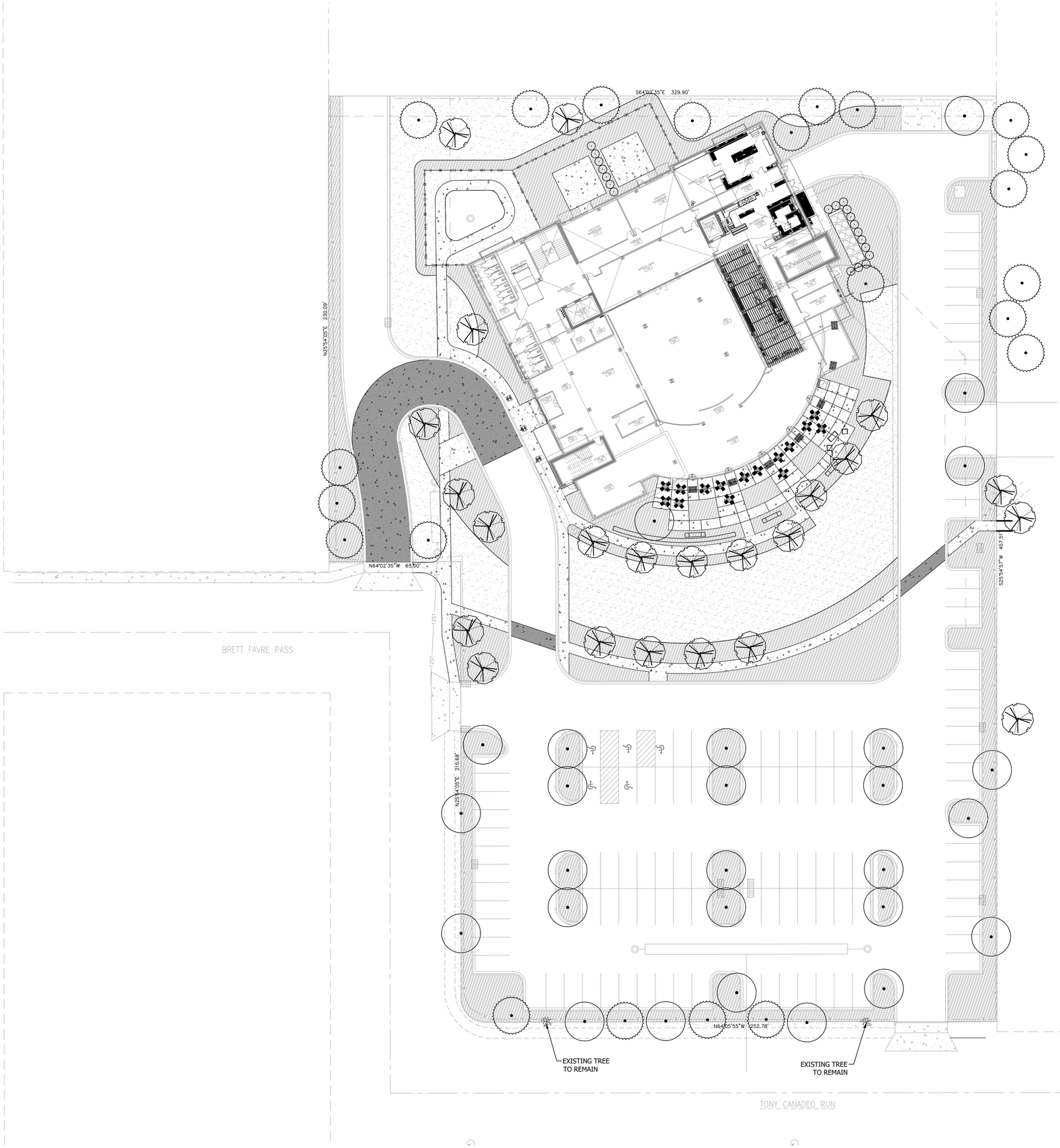

LEGEND

- CONCRETE
- STAMPED AND COLORED CONCRETE
- LANDSCAPE/PLANTING BED
- TURF/SOD
- FENCING
- SHADE TREE
- EVERGREEN TREE
- ORNAMENTAL TREE

NO.	DESCRIPTION	DATE

NEW HOTEL DESIGN
THE LEGACY GREEN BAY, LLC
1004 BRETT FARVE PASS GREEN BAY, WI 54304

Performa ARCHITECTS + ENGINEERS
1241 N. BROADWAY, P.O. BOX 5156
DE PERE, WISCONSIN 54115
PHONE 920.336.9797 FAX 920.336.0899 www.performainc.com

LANDSCAPE CONCEPT

DRAWN	CHKD. ###
DATE	
SCALE	SEE SCALE BAR
DRAWING NO.	L1.01
PROJECT NO.	REV.

9/25/2019 4:10:31 PM

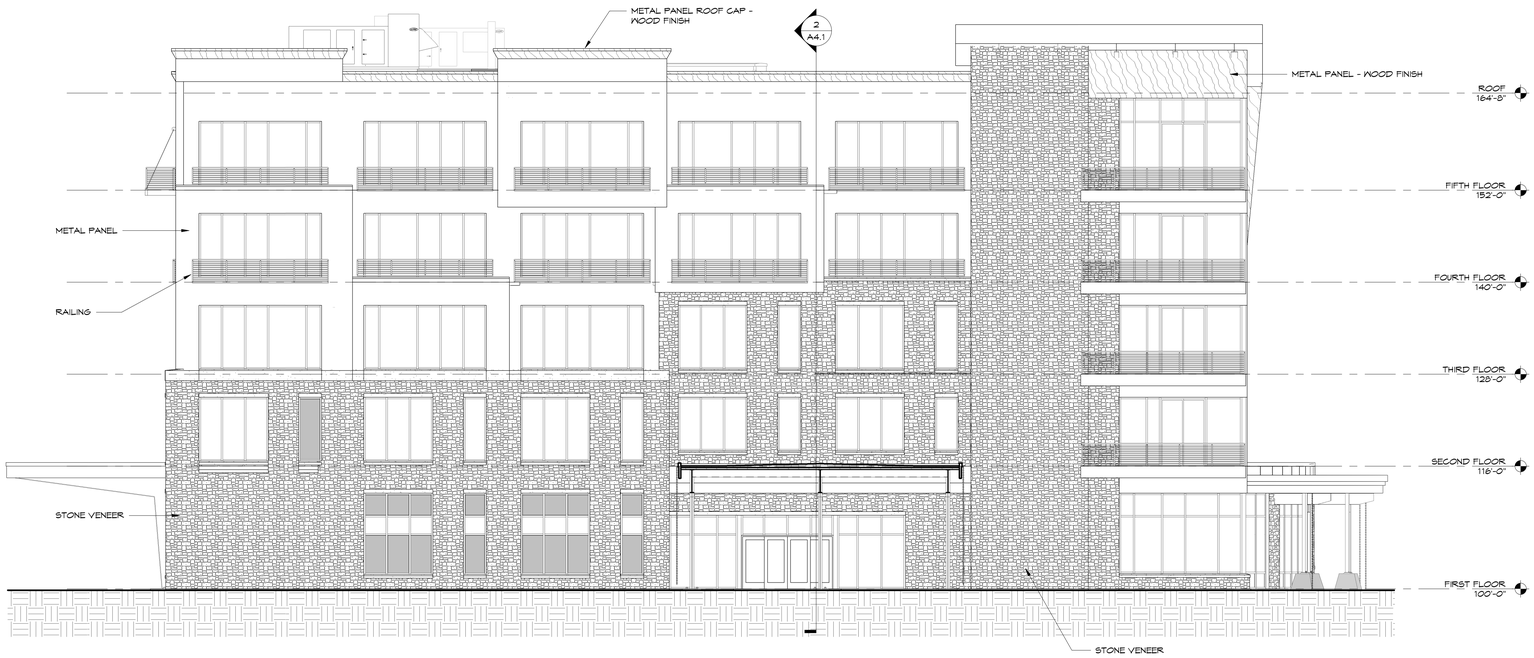

WEST ELEVATION

SCALE: 1/8" = 1'-0"

EAST ELEVATION

SCALE: 1/8" = 1'-0"

NOT FOR CONSTRUCTION - 06-28-19

NO.	DESCRIPTION	DATE

NEW HOTEL DESIGN
THE LEGACY GREEN BAY, LLC
1004 BRETT FARVE PASS GREEN BAY, WI 54304

Performa ARCHITECTS + ENGINEERS
1241 BROADWAY P.O. BOX 3354
DE PERE, WISCONSIN 54115
PHONE: 920-336-9909 FAX: 920-336-2899 www.performainc.com

TITLE: EXTERIOR ELEVATIONS

DRAWN	CHK'D
DAB	BJN

DATE: MM/DD/YY

SCALE: 1/8" = 1'-0"

DRAWING NO.: A3.1

PROJECT NO.: 19005

REV.:

NORTH ELEVATION

SCALE: 1/8" = 1'-0"

SOUTH ELEVATION

SCALE: 1/8" = 1'-0"

NOT FOR CONSTRUCTION - 06-28-19

NO.	DESCRIPTION	DATE

NEW HOTEL DESIGN
THE LEGACY GREEN BAY, LLC
1004 BRETT FARVE PASS GREEN BAY, WI 54304

Performa ARCHITECTS + ENGINEERS
1241 N. BROADWAY P.O. BOX 3354
DE PERE, WISCONSIN 54115
PHONE: 920-336-9909 FAX: 920-336-2899 www.performainc.com

EXTERIOR ELEVATIONS

DRAWN DAB	CHK'D BJN
DATE MM/DD/YY	
SCALE 1/8" = 1'-0"	
DRAWING NO. A3.2	
PROJECT NO. 19005	REV.

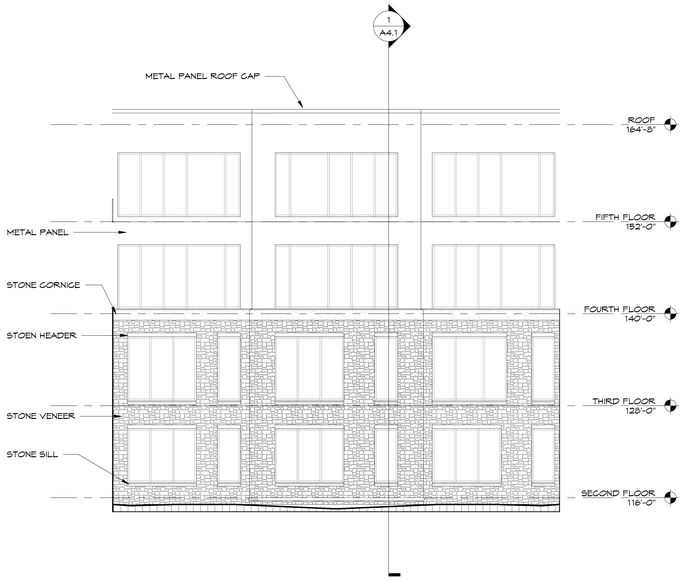

NORTH ELEVATION AT LOW ROOF

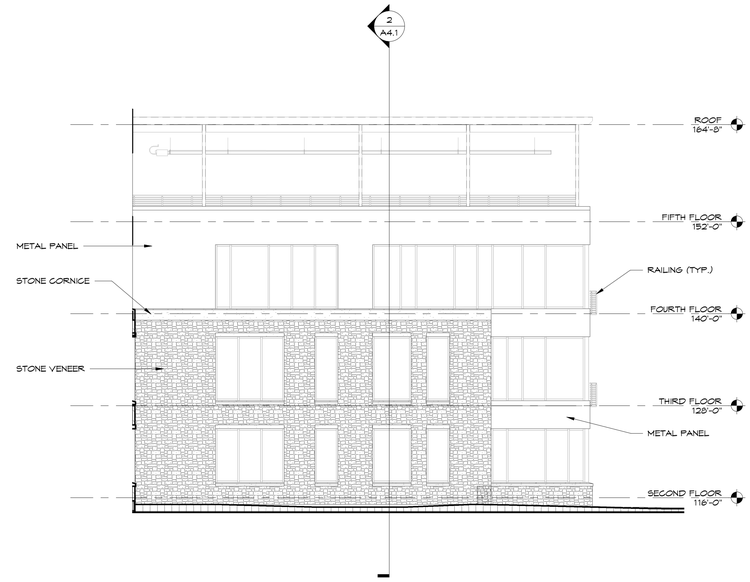

EAST ELEVATION AT LOW ROOF

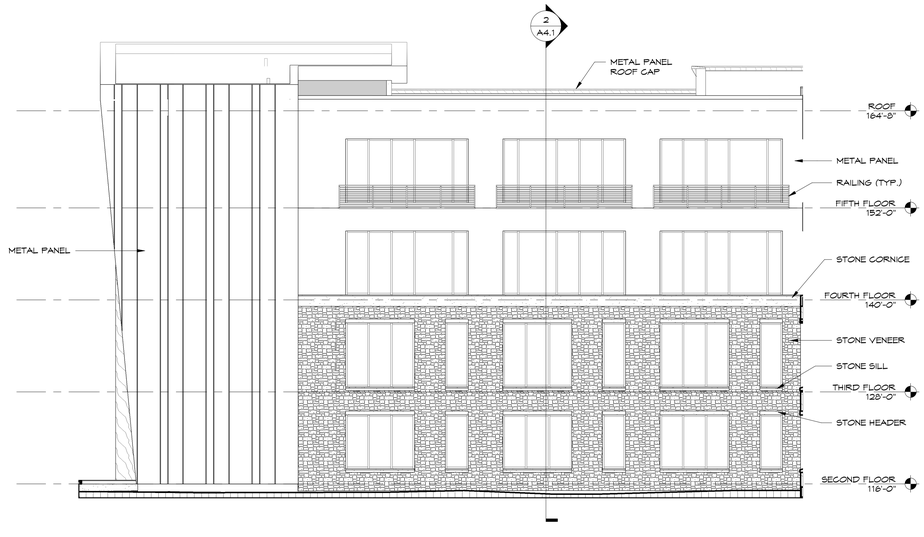

WEST ELEVATION AT LOW ROOF

NOT FOR CONSTRUCTION - 06-28-19

NO.	DESCRIPTION	DATE

NEW HOTEL DESIGN
THE LEGACY GREEN BAY, LLC
1004 BRETT FARVE PASS GREEN BAY, WI 54304

Performa ARCHITECTS + ENGINEERS
124 N. BROADWAY, P.O. BOX 3154
GREEN BAY, WISCONSIN 54308
PHONE: 920-336-9909 FAX: 920-336-2899 www.performaonic.com

TITLE: EXTERIOR ELEVATIONS

DRAWN	CHK'D
DAB	BJN

DATE: MM/DD/YY

SCALE: 1/8" = 1'-0"

DRAWING NO.: A3.3

PROJECT NO.: 19005

REV.:

FLOOR PLAN NOTES:

1. ALL CMU WALL WIDTHS ARE TO BE 8" - WALL TYPE #1 UNLESS NOTED OTHERWISE. SEE SHEET A2.1 FOR WALL TYPES
2. DOOR AND FRAME SCHEDULE - SEE SHEET A2.1
3. ENLARGED TOILET ROOM - SEE SHEET A8.1
4. FOR FIRE EXTINGUISHER LOCATIONS AND TYPES - SEE SHEET LS1.1
5. CASEWORK AND BATHROOM ELEVATIONS - SEE SHEET A8.1

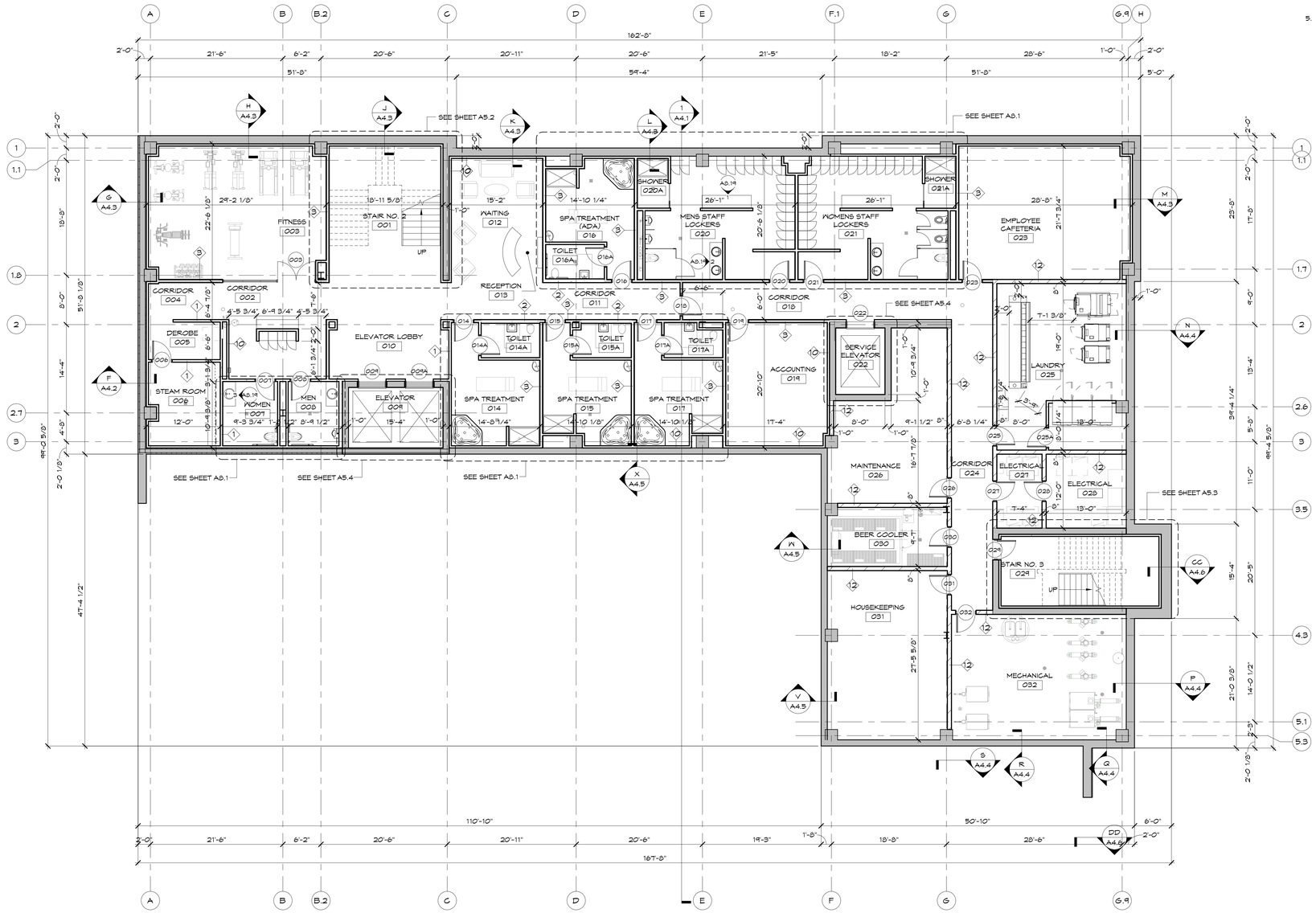

LOWER LEVEL PLAN

SCALE: 1/8" = 1'-0"

NOT FOR CONSTRUCTION - 06-28-19

NO.	DESCRIPTION	DATE

NEW HOTEL DESIGN
THE LEGACY GREEN BAY, LLC
1004 BRETT FARVE PASS GREEN BAY, WI 54304

Performa ARCHITECTS + ENGINEERS
1234 N. BROADWAY, P.O. BOX 3154
GREEN BAY, WISCONSIN 54308
PHONE: 920.336.9999 FAX: 920.336.2899 www.performainc.com

LOWER LEVEL PLAN

DRAWN: DNB	CHK'D: BJN
DATE: MM/DD/YY	
SCALE: 1/8" = 1'-0"	
DRAWING NO. A1.0	
PROJECT NO. 19005	REV.

FLOOR PLAN NOTES:

1. ALL CMU WALL WIDTHS ARE TO BE 5" - WALL TYPE #1 UNLESS NOTED OTHERWISE. SEE SHEET A2.1 FOR WALL TYPES
2. DOOR AND FRAME SCHEDULE - SEE SHEET A2.1
3. ENLARGED TOILET ROOM - SEE SHEET A8.1
4. FOR FIRE EXTINGUISHER LOCATIONS AND TYPES - SEE SHEET LS1.1
5. CASEWORK AND BATHROOM ELEVATIONS - SEE SHEET A8.1

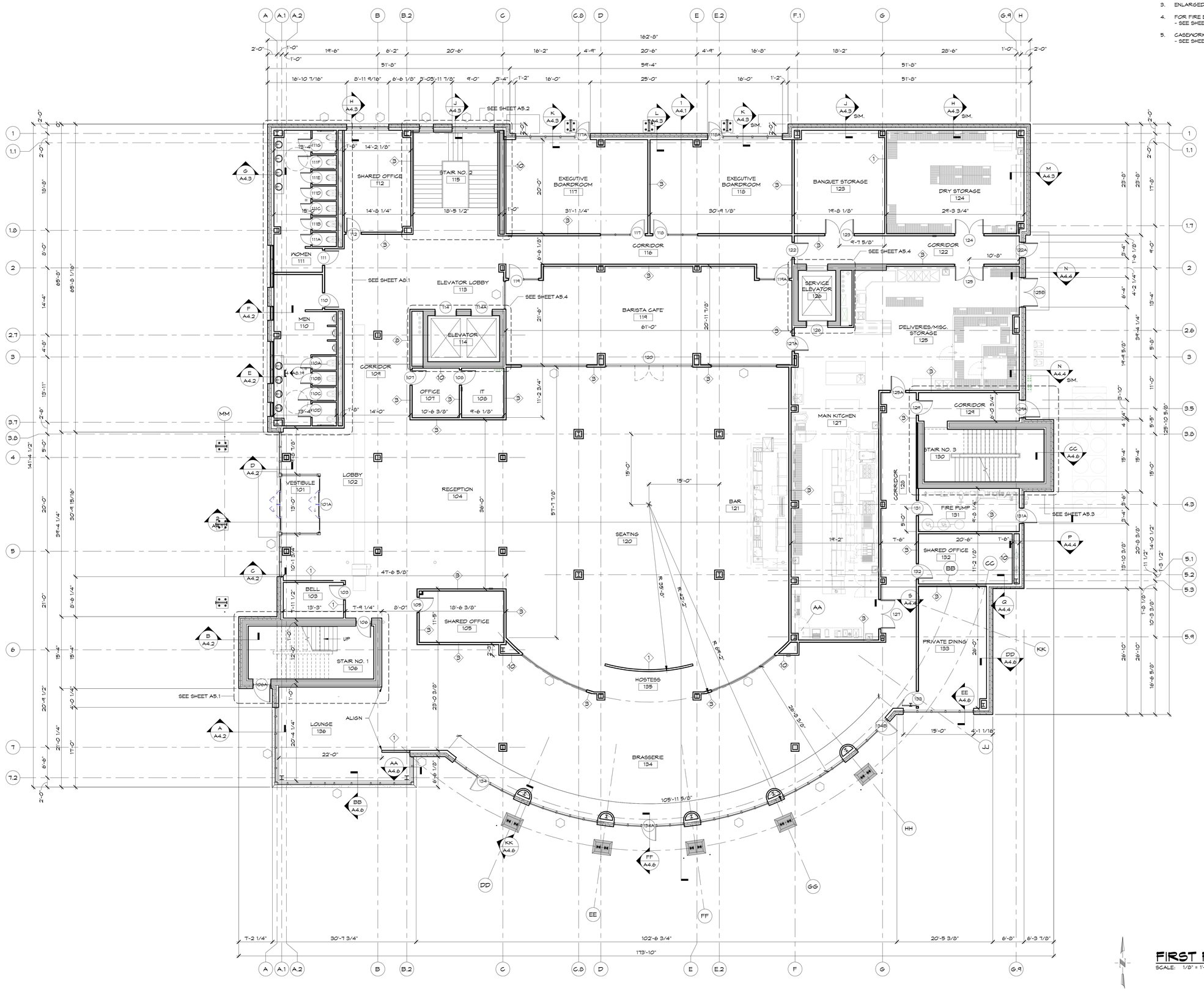

FIRST FLOOR PLAN

SCALE: 1/8" = 1'-0"

NOT FOR CONSTRUCTION - 06-28-19

NO.	DESCRIPTION	DATE

NEW HOTEL DESIGN
THE LEGACY GREEN BAY, LLC
1004 BRETT FARVE PASS GREEN BAY, WI 54304

Performa ARCHITECTS + ENGINEERS
12416 BROADWAY, P.O. BOX 5154
DESERT HOT SPRINGS, CA 92240
PHONE: 909.336.9929 FAX: 909.336.2899 www.performainc.com

FIRST FLOOR PLAN

DRAWN: DNB	CHK'D: BJN
DATE: MM/DD/YY	
SCALE: 1/8" = 1'-0"	
DRAWING NO.: A1.1	
PROJECT NO.: 19005	REV.

FLOOR PLAN NOTES:

1. ALL CMU WALL WIDTHS ARE TO BE 8" - WALL TYPE #1 UNLESS NOTED OTHERWISE. SEE SHEET A2.1 FOR WALL TYPES
2. DOOR AND FRAME SCHEDULE - SEE SHEET A2.1
3. ENLARGED TOILET ROOM - SEE SHEET A8.1
4. FOR FIRE EXTINGUISHER LOCATIONS AND TYPES - SEE SHEET LS1.1
5. CASEWORK AND BATHROOM ELEVATIONS - SEE SHEET A8.1

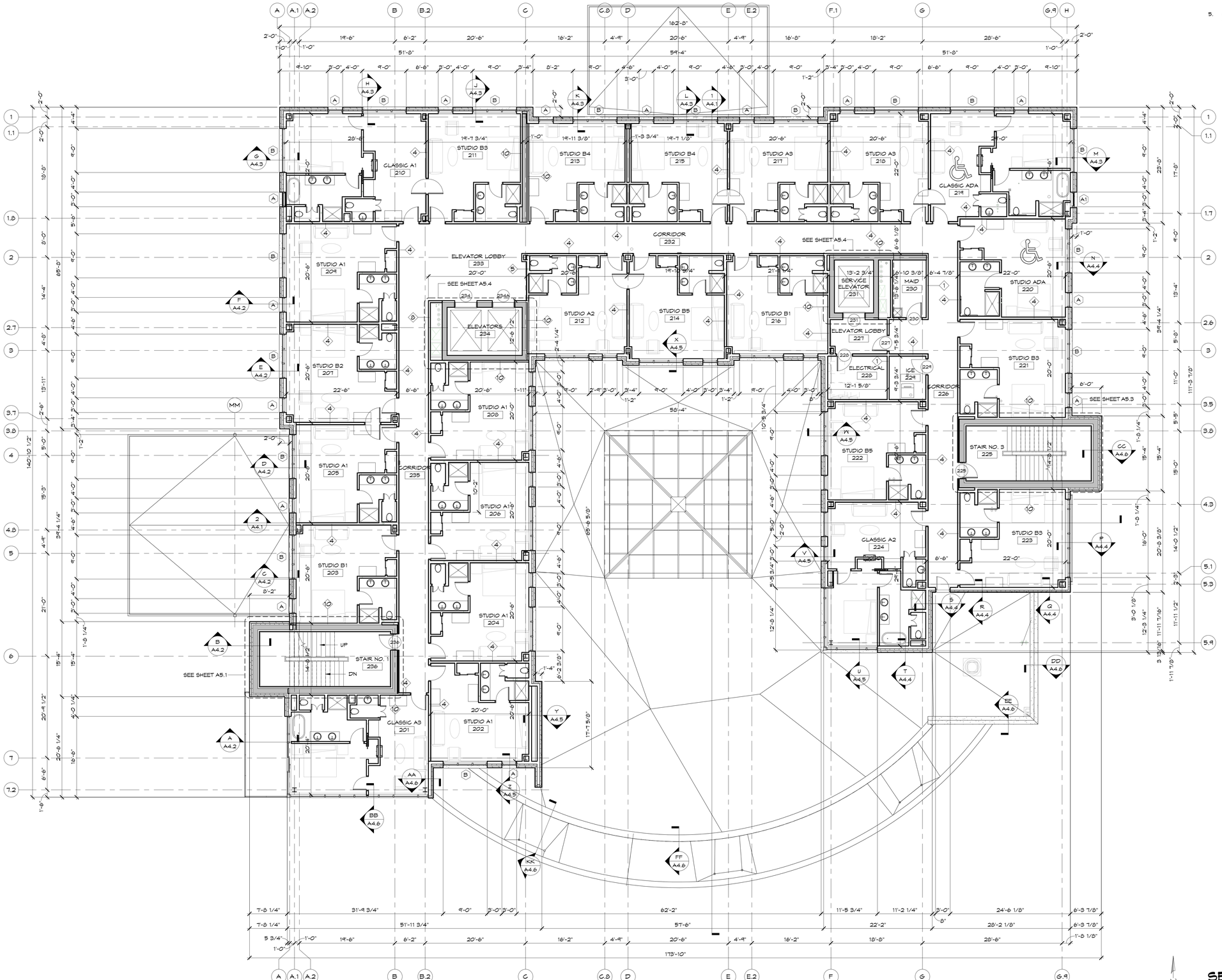

SECOND FLOOR PLAN

SCALE: 1/8" = 1'-0"

NOT FOR CONSTRUCTION - 06-28-19

NO.	DESCRIPTION	DATE

NEW HOTEL DESIGN
THE LEGACY GREEN BAY, LLC
1004 BRETT FARVE PASS GREEN BAY, WI 54304

Performa ARCHITECTS + ENGINEERS
1241 N. BROADWAY, P.O. BOX 3156
GREEN BAY, WISCONSIN 54303
PHONE: 920-336-9929 FAX: 920-336-2899 www.performaarc.com

SECOND FLOOR PLAN

DRAWN	DNB
CHK'D	BJN
DATE	MM/DD/YY
SCALE	1/8" = 1'-0"
DRAWING NO.	A1.2
PROJECT NO.	19005
REV.	

FLOOR PLAN NOTES:

1. ALL CMU WALL WIDTHS ARE TO BE 8" - WALL TYPE #1 UNLESS NOTED OTHERWISE. SEE SHEET A2.1 FOR WALL TYPES
2. DOOR AND FRAME SCHEDULE - SEE SHEET A2.1
3. ENLARGED TOILET ROOM - SEE SHEET A5.1
4. FOR FIRE EXTINGUISHER LOCATIONS AND TYPES - SEE SHEET LS1.1
5. CASEWORK AND BATHROOM ELEVATIONS - SEE SHEET A5.1

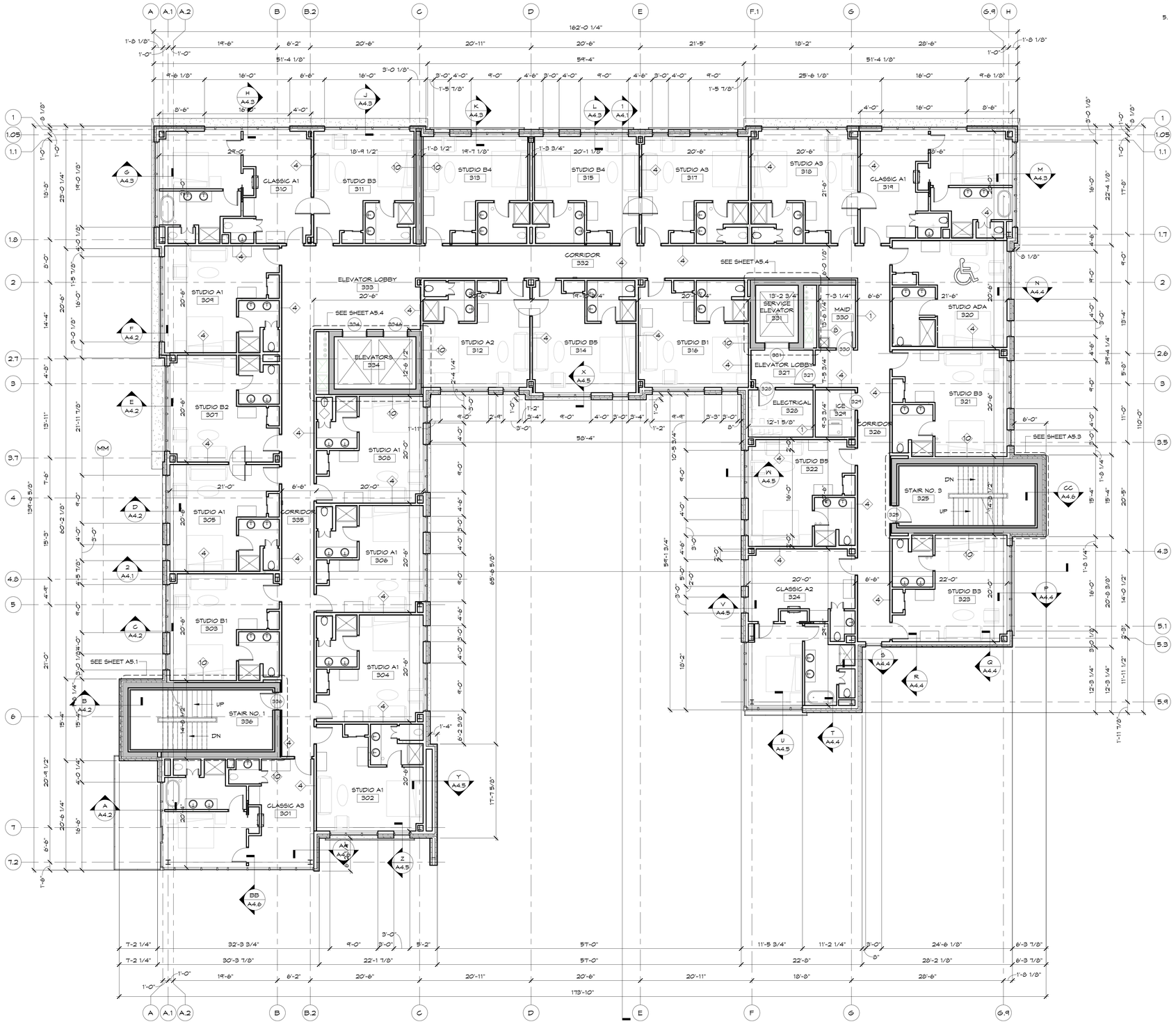

THIRD FLOOR PLAN

SCALE: 1/8" = 1'-0"

NOT FOR CONSTRUCTION - 06-28-19

NO.	DESCRIPTION	DATE

NEW HOTEL DESIGN
THE LEGACY GREEN BAY, LLC
1004 BRETT FARVE PASS GREEN BAY, WI 54304

Performa ARCHITECTS + ENGINEERS
D.R.L. BROADWAY P.O. BOX 3.5.6
GREEN BAY, WISCONSIN 54305
PHONE: 920-336-9909 FAX: 920-336-2899 www.performainc.com

THIRD FLOOR PLAN

DRAWN: DAB	CHK'D: BJN
DATE: MM/DD/YY	
SCALE: 1/8" = 1'-0"	
DRAWING NO.: A1.3	
PROJECT NO.: 19005	REV.:

FLOOR PLAN NOTES:

1. ALL CMU WALL WIDTHS ARE TO BE 8" - WALL TYPE #1 UNLESS NOTED OTHERWISE. SEE SHEET A2.1 FOR WALL TYPES
2. DOOR AND FRAME SCHEDULE - SEE SHEET A2.1
3. ENLARGED TOILET ROOM - SEE SHEET A8.1
4. FOR FIRE EXTINGUISHER LOCATIONS AND TYPES - SEE SHEET LS1.1
5. CASEWORK AND BATHROOM ELEVATIONS - SEE SHEET A8.1

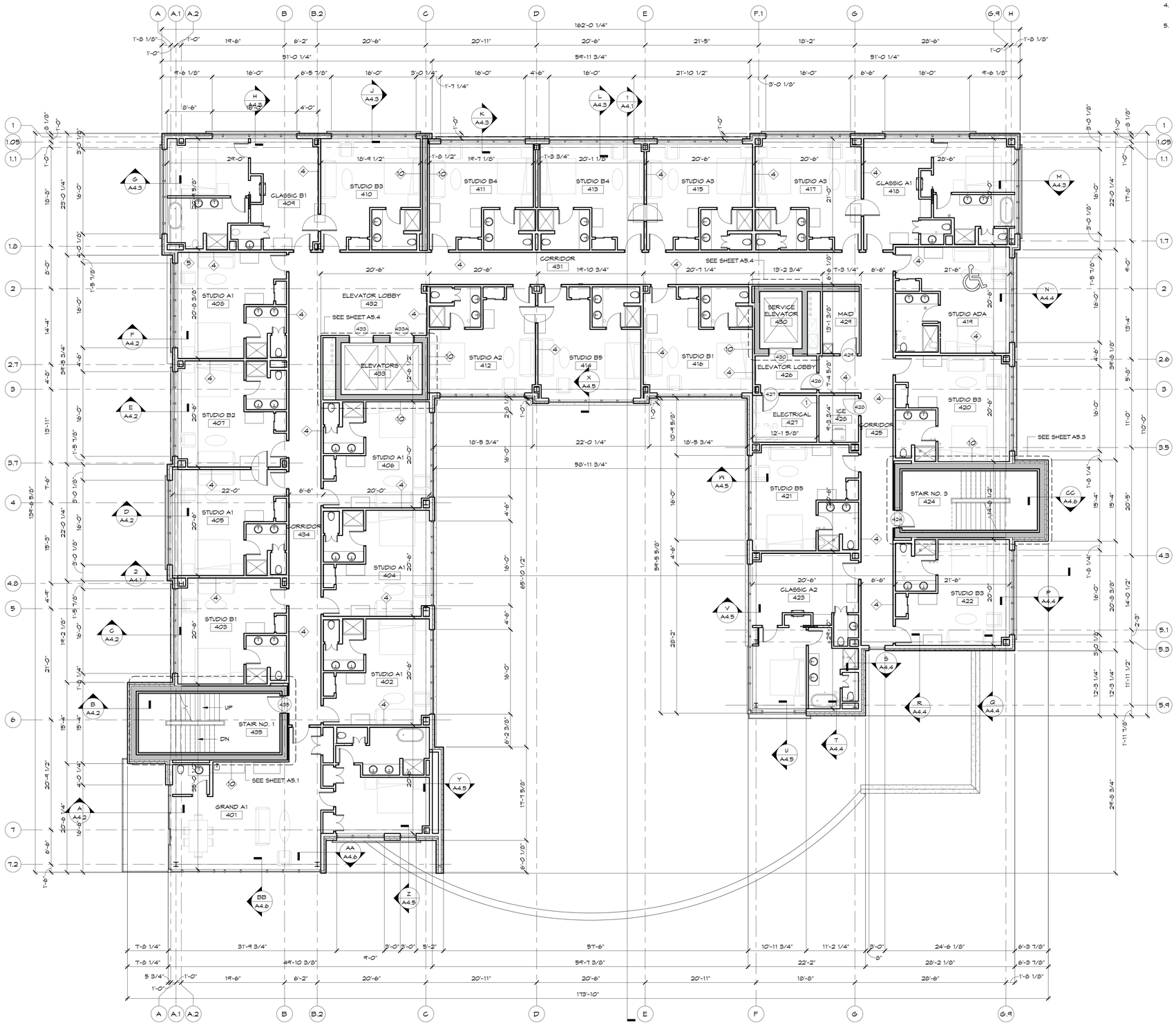

FOURTH FLOOR PLAN

SCALE: 1/8" = 1'-0"

NOT FOR CONSTRUCTION - 06-28-19

NO.	DESCRIPTION	DATE

NEW HOTEL DESIGN
THE LEGACY GREEN BAY, LLC
1004 BRETT FARVE PASS GREEN BAY, WI 54304

Performa ARCHITECTS + ENGINEERS
124 N. BROADWAY P.O. BOX 1356
GREEN BAY, WISCONSIN 54305
PHONE: 920-336-9797 FAX: 920-336-2897 www.performainc.com

FOURTH FLOOR PLAN

DRAWN: DAB	CHK'D: BJN
DATE: MM/DD/YY	
SCALE: 1/8" = 1'-0"	
DRAWING NO.: A1.4	
PROJECT NO.: 19005	REV.:

FLOOR PLAN NOTES:

1. ALL CMU WALL WIDTHS ARE TO BE 8" - WALL TYPE #1 UNLESS NOTED OTHERWISE. SEE SHEET A2.1 FOR WALL TYPES
2. DOOR AND FRAME SCHEDULE - SEE SHEET A2.1
3. ENLARGED TOILET ROOM - SEE SHEET A8.1
4. FOR FIRE EXTINGUISHER LOCATIONS AND TYPES - SEE SHEET LS1.1
5. CASEWORK AND BATHROOM ELEVATIONS - SEE SHEET A8.1

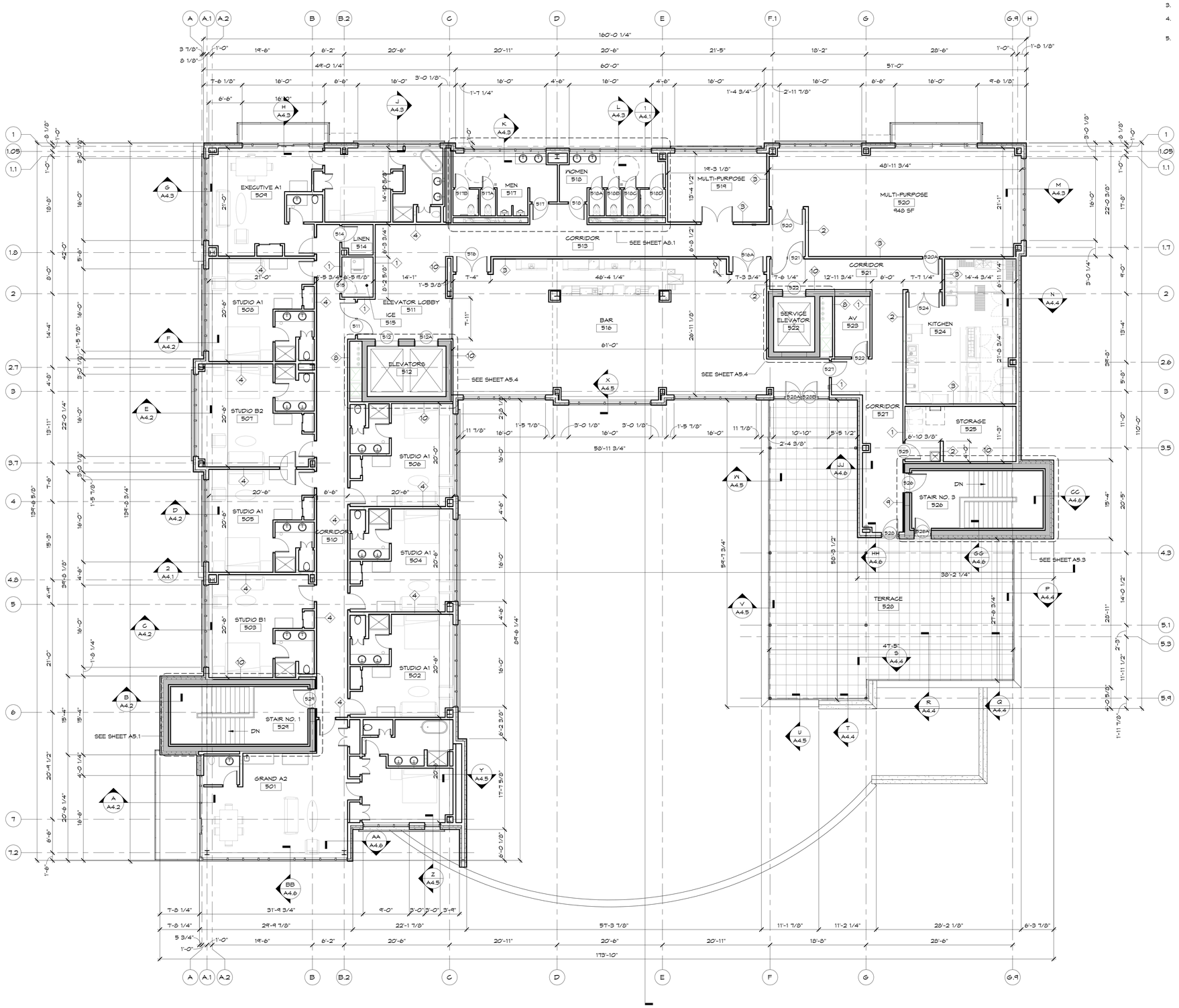

FIFTH FLOOR PLAN

SCALE: 1/8" = 1'-0"

NOT FOR CONSTRUCTION - 06-28-19

NO.	DESCRIPTION	DATE

NEW HOTEL DESIGN
THE LEGACY GREEN BAY, LLC
1004 BRETT FARVE PASS GREEN BAY, WI 54304

Performa ARCHITECTS + ENGINEERS
1241 N. BROADWAY, P.O. BOX 1556
GREEN BAY, WISCONSIN 54305
PHONE: 920-336-9929 FAX: 920-336-2899 www.performaarc.com

FIFTH FLOOR PLAN

DRAWN: DAB	CHK'D: BJN
DATE: MM/DD/YY	
SCALE: 1/8" = 1'-0"	
DRAWING NO.: A1.5	
PROJECT NO.: 19005	REV.

ROOF PLAN NOTES:

1. PIPE PENETRATIONS THROUGH ROOF AND MECHANICAL EQUIP. CURBS - SEE DETAILS ON SHEET A6.1. COORDINATE ALL OPENINGS FOR MISC. VENTS, PIPING, AND DUCTWORK WITH MECHANICAL AND ELECTRICAL CONTRACTORS
2. TAPERED INSULATION SHALL BE CONSTRUCTED OF TAPERED E.P.S (SLOPE TO BE 1/4" /FT.)
3. 30" WIDE ROOFING MAT ADHERED TO TPO ROOFING

ROOF SYSTEMS:

1. MECHANICALLY FASTENED TPO ROOF SYSTEM
   - METAL DECK
   - VAPOR RETARDER
   - (2) LAYERS OF 2" RIGID INSULATION
   - TPO ROOFING MEMBRANE
2. MECHANICALLY FASTENED TPO ROOF SYSTEM
   - METAL DECK
   - VAPOR BARRIER
   - (1) LAYER OF 1 1/2" RIGID INSULATION
   - TPO ROOFING MEMBRANE
3. PRIMARY ROOF DRAIN
   FLASH ACCORDING TO ROOFING MANUFACTURER'S RECOMMENDATIONS - SEE DETAIL (X/A6.1) DRAINS SHALL BE LOCATED 1'-6" OFF COLUMN GRID LINES UNLESS NOTED OR DIMENSIONED OTHERWISE
4. SECONDARY ROOF SCUPPER
   SCUPPER (12" WIDE x 6" HIGH)
   -SEE DETAIL X/A6.1

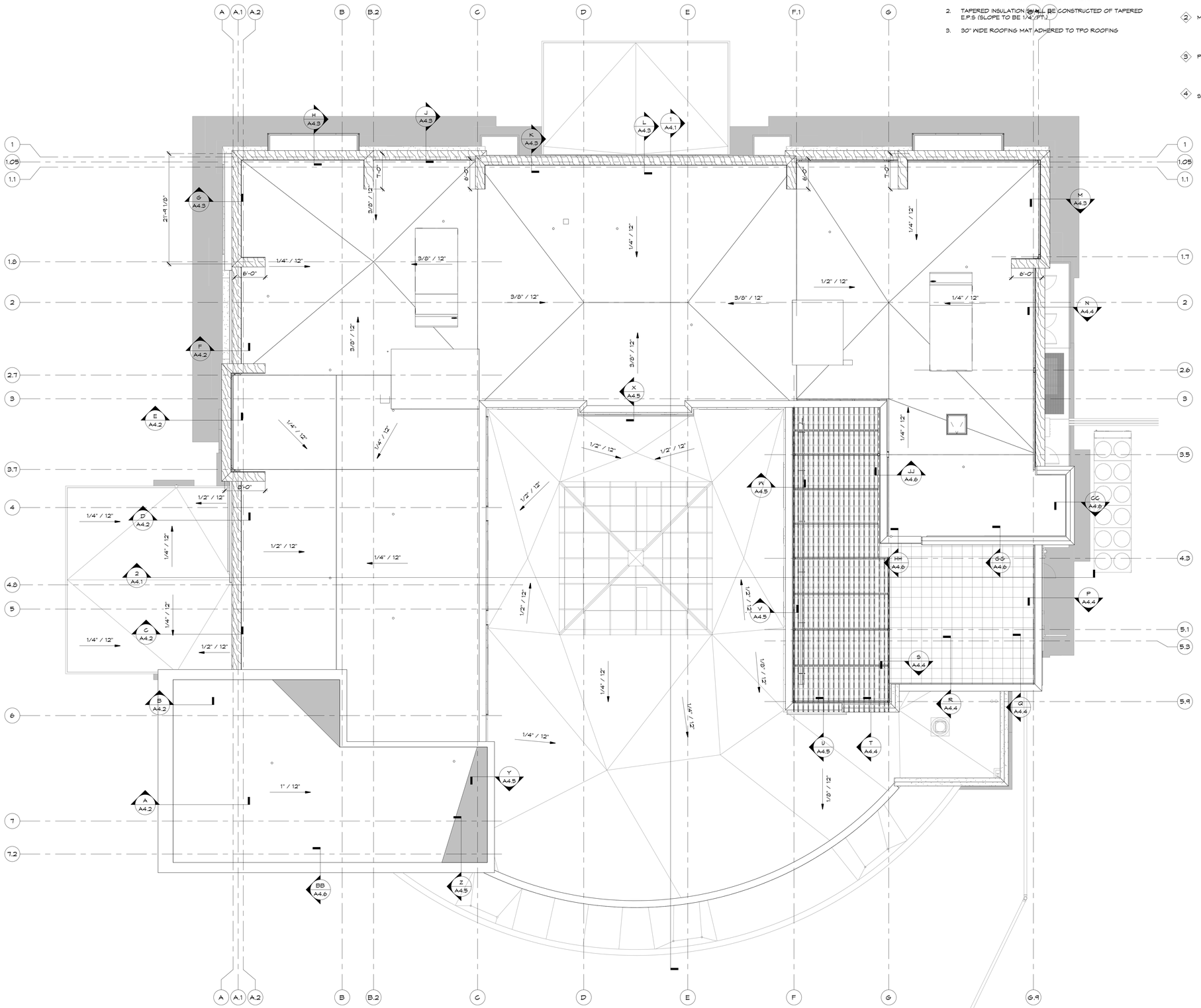

ROOF PLAN
SCALE: 1/8" = 1'-0"

NOT FOR CONSTRUCTION - 06-28-19

NO.	DESCRIPTION	DATE

NEW HOTEL DESIGN
THE LEGACY GREEN BAY, LLC
1004 BRETT FARVE PASS GREEN BAY, WI 54304

Performa ARCHITECTS + ENGINEERS
1324 N. BROADWAY, P.O. BOX 1554
GREEN BAY, WISCONSIN 54305
PHONE: 920.336.9919 FAX: 920.336.2899 www.performainc.com

ROOF PLAN

DRAWN: DNB	CHK'D: BJN
DATE: MM/DD/YY	
SCALE: 1/8" = 1'-0"	
DRAWING NO. A1.6	
PROJECT NO. 19005	REV.

PROJECT COST *(Five-Story Building)*

Construction	**Size**	**Cost**
– Basement *Fitness Studio, Health-Wellness Spa Rooms, Housekeeping, Laundry, Maintenance, Employee Locker-Lounge*	11,120 sf	$1,750,000
– 1st Floor *Front Desk, Lobby, Boardrooms, PBX-Reservations, Offices, Espresso Cafe, Players Club, Kitchen-BH*	19,700 sf	$5,500,000
– 2nd, 3rd, 4th & 5th Floors *Suites; 420-sf (66-ea.), 570-sf (11-ea.), 950-sf 3-ea.)* *Rooftop Lounge-Bar & Terrace*	60,700 sf	$15,000,000
– Signage, Landscape, Courtyard, Pergola, Parking		$500,000
Total Construction		**$22,750,000**
Non-Construction		
– Land Purchase		$2,000,000
– Kitchen-Bar-Laundry Equip		$1,000,000
– Architect, Design, Engineer		$1,200,000
– FF&E Rooms-Outlets *Fitness, Café, Brasserie, Suites*		$1,750,000
– Operating Supplies		$250,000
– Technology, Security		$550,000
– Working Capital, Inventories		$400,000
– Marketing, Branding, PR		$200,000
– Soft Costs, Construction Interest		$1,450,000
– Development Fee (LMD)		$1,250,000
– Hotel Operating Reserve		$200,000
Total Non-Construction		**$10,250,000**
TOTAL DEVELOPMENT COST		**$33,000,000**
SOURCES		
– City TIF / County / State / Other		$3,500,000
– Community Development Grant		$250,000
– Majority Owner Land Contribution		$2,000,000
– Majority Owner 50% Cash Contribution		$250,000
– LMD Minority Owner 20% Cash Contribution		$750,000
– RODAC Minority Owner 20% Cash Contribution		$750,000
– Opportunity Zone Investor 10% Cash Contribution		$1,500,000
– Hotel Franchise Key Cash Contribution		$2,500,000
– SBA 504 Loan		$5,000,000
– Senior Mortgage		$16,500,000

13 NORTH MAIN STREET LEGENDARY HOTELS, LLC FOND DU LAC, WI 54935
www.legendaryhotelsllc.com

Report to the
Redevelopment Authority of the City of Green Bay

MEETING DATE	PREPARED BY
August 13, 2019	Kevin J. Vonck, CED Director

AGENDA ITEM # D.3.

Consideration with possible action to issue Request for Qualifications for an Operator(s) for the Shipyard at 100 W. Mason Street (Tax Parcel 2-78).

The Authority may convene in closed session pursuant to Sections 19.85(1)(e), Wis. Stats., for purposes of deliberating or negotiating the sale of public properties, investing of public funds or conducting other specified public business as necessary for competitive or bargaining reasons. The Authority may thereafter reconvene in open session pursuant to Section 19.85(2), Wis. Stats., to report the results of the closed session and consider the balance of the agenda.

BACKGROUND

In June 2018, the RDA and City approved Development Agreement 18-02: The Shipyard, which involves remediating brownfields, repurposing vacant and underused structures, and enhancing a residential neighborhood on the near west side of the City. The catalyst for development involves the construction of a signature public recreation and entertainment facility at 100 W. Mason Street (Parcel 2-78).

In July 2019, the RDA and City approved a Preliminary Concept Plan(s) for the Shipyard, and discussed options for operating and managing the facility.

Staff is seeking approval to hire an Operator (which may be either a single entity or collaboration of firms) to enter into a Management Agreement(s) to operate and manage the Shipyard as a public facility, which shall be open to users, service providers, and attendees on a non-discriminatory basis.

The RFQ (attached) provides additional information on the scope of the work involved, requirements for submission of a proposal, and the anticipated process for moving forward.

RECOMMENDATION

Approve issuance of Request for Qualifications for an Operator(s) for the Shipyard at 100 W. Mason Street (Tax Parcel 2-78), subject to minor legal and technical clarifications.

FISCAL IMPACT

To be determined as part of the Management Agreement(s).

ATTACHMENTS

1. 8.1 - Shipyard - Management Agreement - RFQ - 190808 - RDA

City of Green Bay
Department of Community and Economic Development

Request for Qualifications

The Shipyard: Management Agreement

Stantec GREEN BAY SHIPYARD AERIAL PERSPECTIVE

Redevelopment Authority of the City of Green Bay

Released 13 August 2019

100 North Jefferson Street, Room 608, Green Bay, Wisconsin 54301-5026
(p) 920.448.3400 (f) 920.448.3426 greenbaywi.gov

PROJECT

Stantec GREEN BAY SHIPYARD CONCEPT PLAN

The City of Green Bay ("City") and the Redevelopment Authority of Green Bay ("RDA") seek to complete a major redevelopment project known as The Shipyard, which involves remediating brownfields, repurposing vacant and underused structures, and enhancing a residential neighborhood on the near west side of the City. The catalyst for development involves the construction of a signature outdoor public recreation and entertainment facility at 100 W. Mason Street (Tax Parcel 2-78), along with related public improvements.

The Shipyard is an attraction that will draw people, year round, to the waterfront for events and daily activities. It is a combination of well-designed spaces (like a **beer garden**) that facilitate social interaction. A **great lawn** will be used for concerts, festivals, large-screen viewing, runs and walks, markets, and other special events. Recreational amenities including an **urban beach**, playground, splash pad, and dog park encourage healthy outdoor activity and provide the neighborhood with access to the waterfront. The **container park** provides a place for food, beverage, and retail entrepreneurs to start and grow a business (and provide employment opportunities), without having to invest in significant amounts of capital.

The Department of Community and Economic Development works to link and leverage our natural, built, human, and social assets in order to generate valuable products, services, and experiences within the City. The City supports development projects like the Shipyard that make our community more:

1. safe; projects that remove blighted and neglected properties with high complaint and/or police call volumes and remediate environmental contamination and/or enhance the physical landscape
2. productive; projects that rehabilitate and/or build new structures with high-performance designs, systems, and finishes and generate property taxes greater than the cost of providing infrastructure
3. accessible; projects that rehabilitate and/or build new structures for individuals of all ages and abilities and are located in places easy to reach on foot, bicycle, or transit
4. innovative; projects that expand our range of (residential, commercial, and industrial) real estate products and create and/or enhance unique public spaces, amenities, and art

Stantec GREEN BAY SHIPYARD BEER GARDEN PERSPECTIVE

Stantec GREEN BAY SHIPYARD GREAT LAWN PERSPECTIVE

Stantec GREEN BAY SHIPYARD URBAN BEACH PERSPECTIVE

Stantec GREEN BAY SHIPYARD CONTAINER PARK PERSPECTIVE

Stantec GREEN BAY SHIPYARD WINTER ICE SKATING PERSPECTIVE

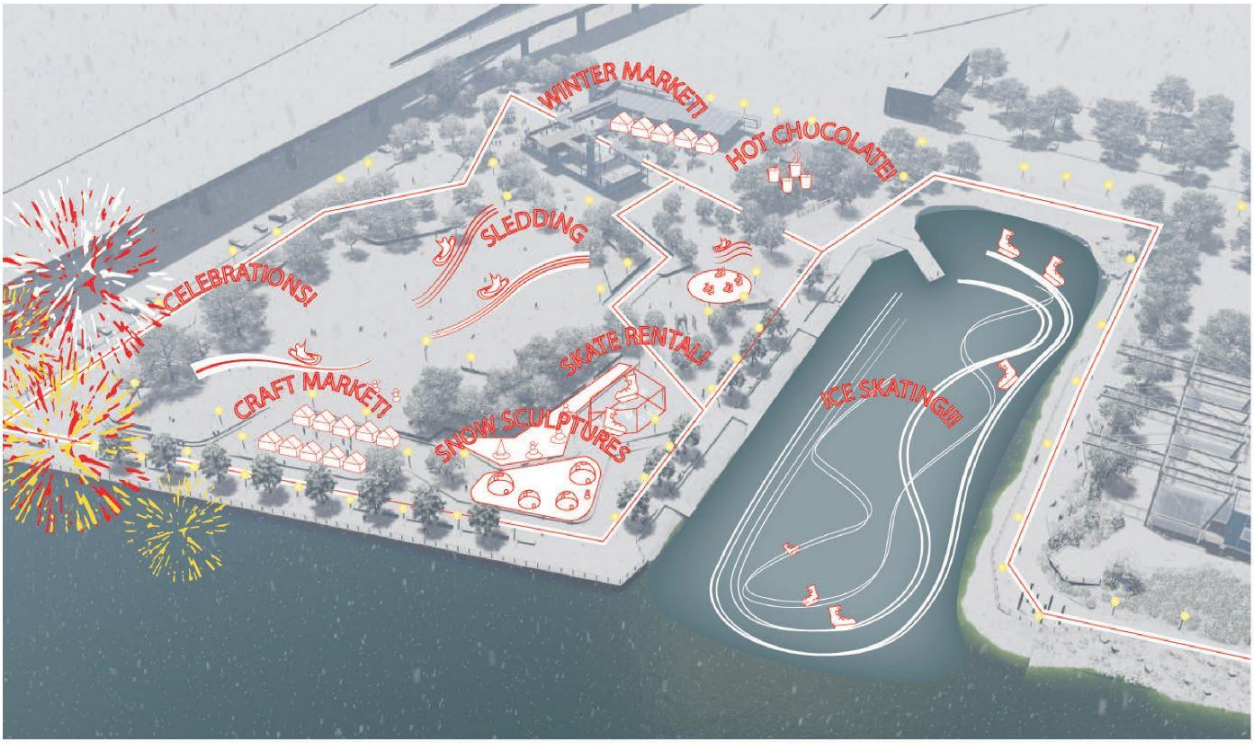

Stantec GREEN BAY SHIPYARD WINTER PROGRAM

REQUEST

The RDA is seeking approval to hire an Operator (which may be either a single entity or collaboration of firms) to enter into a Management Agreement(s) to operate and manage the Shipyard as a public facility, which shall be open to users, service providers, and attendees on a non-discriminatory basis.

A. Facility Management. Operating and maintaining a great lawn, urban beach, playground, splash pad, dog park; a multi-modal public path along the entire waterfront boundaries of the slip, composed of a combination of concrete, pavers, asphalt, crushed limestone, wood or engineered decking, and/or similar hard surfaces; and a floating dock for transient boaters and an accessible kayak launch.

B. Parking Management. Operating and maintaining approximately two hundred and sixty (260) surface parking spaces, including approximately one hundred and twenty (120) spaces within S. Broadway and 613 S. Broadway (Tax Parcels 2-107 and 2-109) and the Mason Street right-of-way between S. Broadway and the Fox River; approximately twenty (20) spaces within 525 S. Broadway and 531 S. Broadway (Tax Parcels 2-76 and 2-77); and approximately one hundred and twenty (120) spaces within 401 S. Broadway, S. Broadway, 505 S. Broadway, 511-513 S. Broadway, 515 S. Broadway, and 517 S. Broadway (Tax Parcels 3-568, 3-568-1, 2-946, 2-949-A, 2-70, and 2-71).

C. Program Management. Developing and operating concerts, festivals, large-screen viewing, runs and walks, public speeches, political rallies, worship services, or similar events of public assembly; markets, trade shows, expositions, or similar events of a commercial nature; parties, weddings, receptions, or similar special events of a private nature; and any incidental activities related the aforementioned uses.

D. Container Park Management. Operating and maintaining approximately twenty-four (24) permanent and/or seasonal structures (e.g. shipping containers) for food, beverage, retail, and recreation; recruiting and retaining businesses; collaborating on programming on technical assistance.

REQUIREMENTS

Each Proposal shall include the following items placed in this order:

A. A statement describing the scope of the work the Operator seeks to undertake. It should clearly express what aspects of management – the facility, parking, program, and/or container park –the Operator seeks to pursue. It should identify any modification to, or expansion of, the general scope of work outlined in this RFQ. *Preference will be given to Operators who can manage more than one aspect.*

B. A statement proposing general terms and conditions from which an Agreement will be drafted, including term length and financial structure. *Preference will be given to Operators that offer the greatest value.*

C. A statement that provides general information about the proposed Operator, including the scope and nature of services the Operator routinely provides, as well as the professional and technical qualifications of key personnel who will be involved. *Preference will be given to Operators with experience and expertise in facility, program, and/or retail space management.*

D. A statement, with specific examples, that describes past performance on this type of work, including experience with working with regulatory agencies on permitting and approvals. *Preference will be given to Operators with past experience and good working relationships.*

PROCESS

This is a high-priority project for the RDA and City, and thus is reflected in an aggressive schedule:

Tuesday 13 August	RDA releases Request for Qualifications
Tuesday 3 September	Operators submit questions via e-mail (kevinvo@greenbaywi.gov) to RDA by 11:59 p.m. CDT
Tuesday 10 September	RDA posts answers to questions as Addendum to RFQ on City website
Tuesday 24 September	Operators submit Qualification Proposals via e-mail (kevinvo@greenbaywi.gov) to RDA by 11:59 p.m. CDT
Tuesday 8 October	RDA selects Operator
following	RDA and Operator negotiate and execute final contract

DISCLAIMER

This RFQ prepared by the RDA does not purport to be all-inclusive or to contain all of the information a prospective private developer may desire. No legal liability is assumed or shall be implied with respect to the accuracy or completeness of this RFQ. The RDA reserves the right to revise any part of this RFQ by issuing an Addendum at any time prior to the submittal deadline. The RDA reserves the right to accept or reject, in whole or part, all proposals submitted and/or to cancel this request if any such action is determined to be in the best interest of the RDA and/or City. All materials submitted in response to this RFQ become the property of the RDA. The RDA will not be responsible for costs associated with preparing a Proposal. By submitting a Proposal, each Operator agrees to be bound in this respect and waives all claims regarding such costs and fees.

PROJECT LOCATION

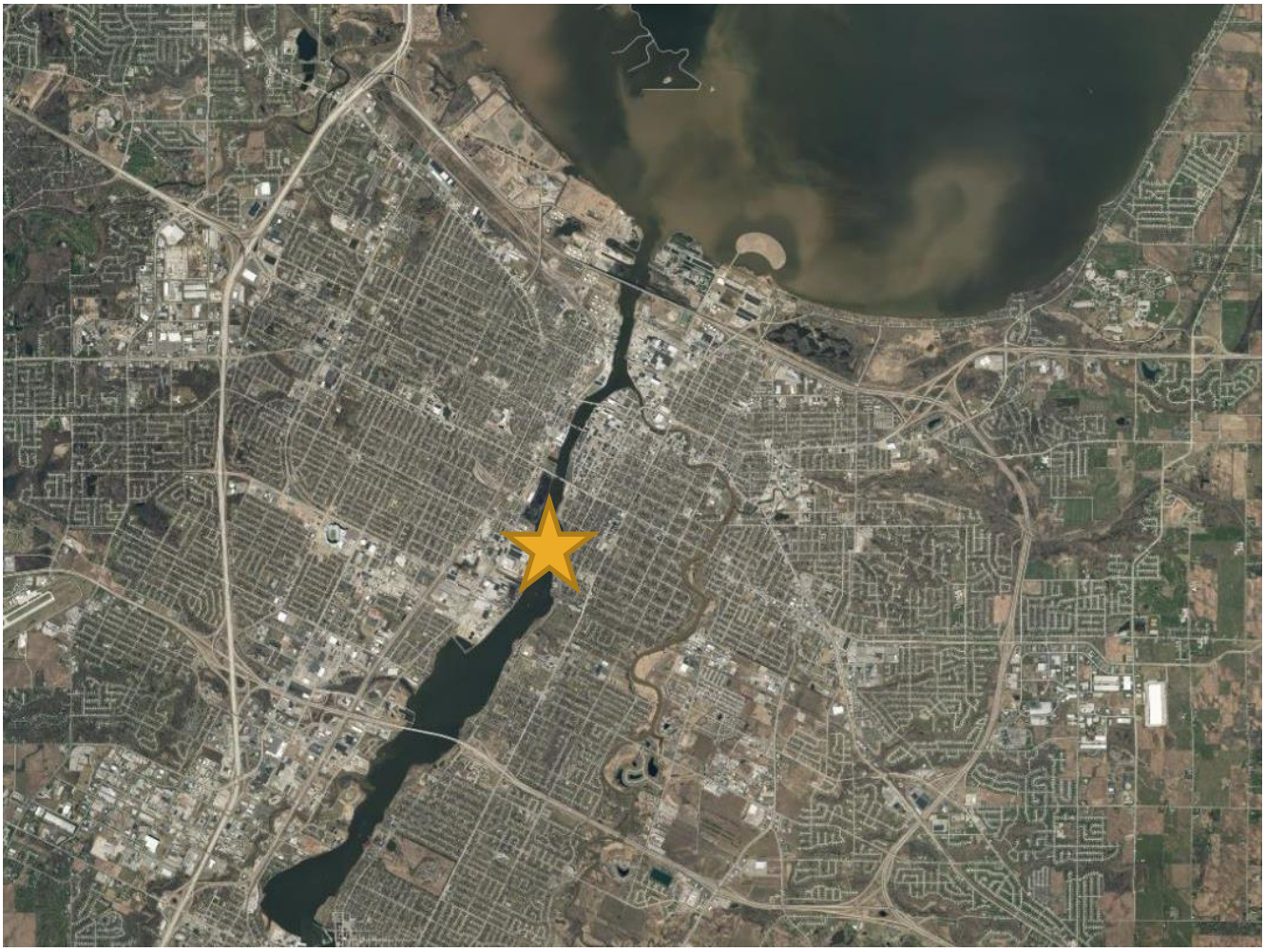

Report to the
Redevelopment Authority
of the City of Green Bay

MEETING DATE	PREPARED BY
August 13, 2019	Kevin J. Vonck, CED Director, Laura Schley, Staff

AGENDA ITEM # D.4.

Consideration with possible action on communication from June 19, 2018, of the Common Council by Ald. Brian Johnson, to direct staff to draft a percent for the arts proposal that would assess a specified percent on all new and/or redevelopment projects for the purpose of public art installation, maintenance and funding staff to support the public arts commission.

BACKGROUND

In June 2018, Ald. Brian Johnson asked staff to draft a percent for the arts proposal that would assess a specified percent on all new and/or redevelopment projects for the purpose of public art installation, maintenance and funding staff to support the public arts commission.

Staff reviewed a number of alternatives from other communities and is recommending that Development Agreement language for Projects with TIF incentives institute a "Percent for Art" obligation that requires the Developer to include a budgetary line item of not less than one percent (1%) of the estimated aggregate assessed value of the Property, which shall be specifically dedicated towards: 1) Public Art on the Property, 2) Public Art within one-half (1/2) mile of the Property, 3) a separate Public Art project(s) approved by the RDA and GBPAC, or 4) funds for design and maintenance of Public Art, or any combination of the alternatives herein; and that this provision only be removed by the consent of the RDA.

RECOMMENDATION

Adopt Resolution 19-03 Regarding Percent for Art.

FISCAL IMPACT

To be determined by each future Development Agreement. No levy dollars will be used.

ATTACHMENTS

1. 6.3 - RDA - Resolution - 19-03 - Percent for Art

Redevelopment Authority
of the City of Green Bay

RESOLUTION 19-03
REGARDING
PERCENT FOR ART

August 13, 2019

WHEREAS, the City of Green Bay ("City") accepts responsibility for expanding the opportunity for its citizens to experience art in public places; and

WHEREAS, the City also recognizes that Public Art promotes the cultural heritage and artistic development of the community; enhances community character and identity; contributes to economic development and tourism; adds warmth, dignity, beauty and accessibility to public spaces; and expands the experience and participation of citizens with visual arts; and

WHEREAS, the Green Bay Public Arts Commission ("GBPAC")strives to acquire works of art of the highest quality that advance public understanding of visual art; enhance the aesthetic quality of public spaces; preserve the cultural heritage of Green Bay; represents an expression of our time; entail a measure of public significance; and conform to best practices in the field; and

WHEREAS, the GBPAC works to ensure that the pursuit of art is intrinsically integrated into the community fabric, reflecting a broad range of participation; the fostering of the artistic vitality and creative community environment by encouraging local artistic endeavors; providing access to artistic experiences of the highest caliber for Green Bay residents and visitors; the encouragement of public dialogue that increases public understanding and enjoyment of art, through appropriate public education forums and programs;

WHEREAS, the GBPAC seeks to incorporate art that encourages interaction and establishes vibrant and unique public spaces for the community and its residents; encourage true collaborative efforts among artists and architects, engineers, landscape architects, and City officials; and integrate artists and their work into the process of creating unique public spaces for the citizens of Green Bay; and

WHEREAS, the GBPAC seeks sources of revenue to fund such works of art; and

100 North Jefferson Street, Room 608, Green Bay, Wisconsin 54301-5026
(p) 920.448.3400 (f) 920.448.3426 greenbaywi.gov

WHEREAS, Redevelopment Authority of the City of Green Bay ("RDA") has traditionally been charged with drafting, negotiating, approving, and implementing Development Agreements for Projects with Tax Increment Financing ("TIF") incentives.

NOW, THEREFORE, BE IT RESOLVED that Development Agreement language for Projects with TIF incentives institute a "Percent for Art" obligation that requires the Developer to include a budgetary line item of not less than one percent (1%) of the estimated aggregate assessed value of the Property, which shall be specifically dedicated towards: 1) Public Art on the Property, 2) Public Art within one-half (1/2) mile of the Property, or 3) a separate Public Art project(s) approved by the RDA and GBPAC, 4) funds for design and maintenance of Public Art, or any combination of the alternatives herein; and

BE IT FURTHER RESOLVED that Public Art shall be accessible to the public, and includes all forms of original creations of visual art, conceived in any medium, material, or combination thereof, including paintings, drawings, stained glass, and murals in any media; statues, bas relief, mobile, kinetic, electronic, neon, or other sculptures; environmental artworks; fountains, arches or other structures intended for ornament; integrated and functional architectural elements of a structure; video and other media-based works; inscriptions, fiber works, carvings, mosaics, photographs, drawings, collages, textile works and prints; crafts, both decorative and utilitarian in clay, fiber, wood, metal, glass, stone, plastic and other materials; artist-designed public spaces and functional elements which are either a part of a larger project or a separate entity in and of itself; and

BE IT FURTHER RESOLVED that such requirement be modified only upon consent of the RDA.

Adopted _____

Approved _____

REDEVELOPMENT AUTHORITY OF THE CITY OF GREEN BAY

By: _____
Gary J. Delveaux, Chair

Attest: _____
Kevin J. Vonck, Executive Director

Report to the
Redevelopment Authority
of the City of Green Bay

MEETING DATE	PREPARED BY
August 13, 2019	Wendy Townsend, Economic Coordinator

AGENDA ITEM # D.5.

Consideration with possible action on a request by Merge Urban Development Group for a three (3)-month extension on their Planning Option Agreement dated April 9, 2019 for the development of the RDA's properties located at 321 and 325 N. Broadway.

BACKGROUND

Merge Urban Development Group entered into a planning option with the RDA on April 9, 2019, with the intent to build a mixed use development on parcels 5-586 and 5-587 located at 321 and 325 N. Broadway. They have been in contact frequently with planning staff and are continuing to put the finishing touches on their proposal, but will need additional time to do so and are asking for a three (3)-month extension. They are willing to give the RDA a project update to show what work had been completed since April 2019.

RECOMMENDATION

To grant a three (3)-month extension to Merge Urban Development Group, per the attached agreement "If the developer is awarded the Extended Term, Developer shall pay to the RDA an additional payment in the amount of Five Thousand Dollars ($5,000)."

FISCAL IMPACT

ATTACHMENTS

1. Merge Planning Option April 2019

PLANNING OPTION AGREEMENT

This PLANNING OPTION AGREEMENT (this "Agreement"), made and entered into this 9th day of April, 2019, by and between the REDEVELOPMENT AUTHORITY OF THE CITY OF GREEN BAY, a Wisconsin municipal corporation established pursuant to Chapter 66, Wis. Stats., having its office at Room 608, City Hall, 100 North Jefferson Street, Green Bay, Wisconsin (hereinafter the "RDA"), and MERGE, LLC, an Iowa limited liability company, d/b/a Merge Urban Development Group, having its office at 604 Clay Street, Cedar Falls, Iowa 50613 (hereinafter "DEVELOPER").

WITNESSETH:

WHEREAS, the RDA owns property located at 321 and 325 N. Broadway , in the City of Green Bay, County of Brown, Wisconsin (Tax Parcels 5-586 and 5-587), and more fully described in the legal description, which is attached hereto and incorporated herein as Exhibit A (hereinafter " Project Site"); and

WHEREAS, the DEVELOPER has requested a planning option to allow time to complete all due diligence necessary to determine the physical and financial feasibility of constructing a mixed use development with rental units and light- retail space; and

WHEREAS, the RDA desires to see the Project Site developed in an active mixed-use development that generates economic activity and increases assessed land value, thereby generating additional property tax base for the community; and

WHEREAS, the RDA is willing to negotiate a sale of the Project Site with the DEVELOPER upon a determination by both parties of the economic and physical viability of proposed future uses.

NOW, THEREFORE, for good and valuable consideration, the parties mutually agree and state as follows:

1. The RDA hereby grants to DEVELOPER an exclusive Planning Option for an initial term expiring August 31, 2019 for the Project Site (the "Initial Term"). This period is required in order to complete all due diligence necessary to determine the physical and financial feasibility of proposed future uses. The Initial Term of this Agreement may be extended by mutual written agreement of the parties, and, if so, such extended term will be known and is hereinafter referred to as the "Extended Term").

2. To secure the Initial Term, DEVELOPER shall pay the RDA a payment in the amount of One Thousand dollars ($1000.00). If DEVELOPER is awarded the Extended Term, DEVELOPER shall pay to RDA an additional payment in the amount of Five Thousand Dollars ($5,000.00).

3. The RDA, during the Initial Term, or any Extended Term, shall provide that the Project Site shall not be sold/conveyed or leased to any other legal entity and hereby agrees to grant to the DEVELOPER exclusive negotiating rights for the purchase or lease of said real property during the Initial Term and any Extended Term.

4. The RDA hereby grants DEVELOPER full access to the site for purposes of completing due diligence including, but not limited to, soil testing, engineering analysis, environmental assessments and inspections (including invasive assessments and inspections in the discretion of the DEVELOPER), other inspections and other needs for ingress and egress upon the

land. This access is subject to any preexisting easements and licenses on the Project Site. However, any such licenses will be terminated by RDA the in the event the DEVELOPER determines that termination is reasonably necessary for completion of the due diligence necessary for this Agreement, and, in that event, DEVELOPER will be granted a day-by-day/day-to-day extension of the Initial Term or the Extended Term, if any, for the number of days that it takes for the RDA to terminate such licenses.

5. The RDA and/or City of Green Bay shall make available all known environmental reports and activity upon the Project Site. By entering into this Agreement, the DEVELOPER in no way assumes any responsibility or liability for site remediation.

6. During the pendency of this Agreement and upon determination of the feasibility of proposed future uses, the parties shall work in good faith to negotiate and execute a Development Agreement, and any other associated documentation, that shall provide for the acquisition and development of the Project Site to DEVELOPER. Such Development Agreement is subject to the approval of the RDA and City of Green Bay Common Council.

7. It is agreed and understood by the parties that all proposed future uses in the Development Agreement shall complement existing uses on adjacent properties. The CITY shall coordinate the public agency participation in planning, obtaining data from public records as may be available, reviewing and commenting on aspects of proposed future uses in a timely manner.

8. DEVELOPER shall demonstrate the ability to obtain financing for the proposed future uses prior to the expiration of this Agreement.

9. DEVELOPER understands that the RDA shall approve any final design plans as a condition of receiving any financial assistance from the RDA. RDA financial assistance may be in the form of Tax Increment Financing or other governmental grants paid to DEVELOPER in accordance with the Development Agreement.

10. INTENTIONALLY DELETED.

11. If the parties agree upon and execute a Development Agreement prior to the expiration of this Agreement, the RDA shall convey the Project Site to the DEVELOPER in accordance with the terms and conditions of the Development Agreement, and any associated documentation.

12. If a Development Agreement is not agreed to by the parties prior to the expiration of this Agreement, and no extension has been agreed to by the parties, this Agreement is hereby terminated and the DEVELOPER shall furnish to the RDA all environmental reports and studies, and surveys relating to the Project Site.

13. In the event the DEVELOPER determines that the proposed use on the Project Site is not feasible during the pendency of this Agreement, DEVELOPER may terminate this Agreement and shall notify the RDA in writing of the termination.

14. RDA and DEVELOPER shall pay all of their own legal fees, third party fees, customary closing costs and other costs related to this Agreement, the Development Agreement, and any lease or sale associated with this Agreement.

SIGNATURE PAGE TO FOLLOW

IN WITNESS WHEREOF,

this Agreement has been duly executed as of the date first above written.

The Redevelopment Authority of the City of Green Bay

Gary Delveaux, Chair

Kevin J Vonck, Secretary

Merge Urban Development

Name, Title Manager

EXHIBIT A
LEGAL DESCRIPTION OF PROJECT SITE

321-325 N. Broadway

Parcels 5-586 & 5-587

Lot Forty-Nine (49) and the Northerly Twenty-five (25) feet of Lot Fifty (50) Dousman's Addition, According to the Recorded Plat Thereof: and the Southerly 2.6 feet of Lot One(1), Elmore's Addition, according to the Recorded Plat Thereof, in the City of Green Bay, West side of Fox River, Brown County, Wisconsin.

EXHIBIT A

LEGAL DESCRIPTION OF PROJECT SITE

321-325 N. Broadway

Parcels 5-586 & 5-587

Lot Forty-Nine (49) and the Northerly Twenty-five (25) feet of Lot Fifty (50) Dousman's Addition, according to the Recorded Plat Thereof; and the Southerly 2.6 feet of Lot One (1), Elmore's Addition, according to the Recorded Plat Thereof, in the City of Green Bay, West side of Fox River, Brown County, Wisconsin.

Report to the
Redevelopment Authority
of the City of Green Bay

MEETING DATE	PREPARED BY
August 13, 2019	Krista Cisneroz, Staff

AGENDA ITEM # D.6.

Consideration with possible action on award of Contract CD 19-01 Part "A" Sidewalk & Pavement Repair to the low qualified bidder, Martell Construction, in the amount of $141,991.00 and Part "B" Alley Resurfacing to the low qualified bidder, Northeast Asphalt Inc., in the amount of $274,435.80.

BACKGROUND

Bids were received on July 30, 2019 by the Department of Public Works for CDBG funded contract CD 19-01 Part "A" Sidewalk and Pavement Repair; Part "B" Alley Resurfacing. Staff has reviewed the bids received and determined that all bids are responsive and complete. At this time, Department of Public Works recommends awarding the contract as follows:

Award Part "A" to Martell Construction as received in the amount of $141,991.00.
Award Part "B" to Northeast Asphalt, Inc. as received in the amount of $274,435.80.

RECOMMENDATION

Award of Contract CD 19-01 Part "A" Sidewalk & Pavement Repair to the low qualified bidder, Martell Construction, in the amount of $141,991.00 and Part "B" Alley Resurfacing to the low qualified bidder, Northeast Asphalt Inc., in the amount of $274,435.80.

FISCAL IMPACT

ATTACHMENTS

1. sharpscans@greenbaywi.gov_20190808_150609

CITY OF GREEN BAY, WISCONSIN

SUMMARY OF BIDS FOR CONTRACT

CD 19-01 PART "A" SIDEWALK AND PAVEMENT REPAIR; PART "B" ALLEY RESURFACING

Tuesday, July 30, 2019

Contractor	Part A	Part B	Bid Bond
MARTELL CONSTRUCTION	**$141,991.00**		**10%**
NORTHEAST ASPHALT, INC.		**$274,435.80**	**10%**
Any questions, call 920-448-3100			

Report to the
Redevelopment Authority
of the City of Green Bay

MEETING DATE	PREPARED BY
August 13, 2019	Cheryl Renier-Wigg, Staff

AGENDA ITEM # D.7.

Consideration with possible action to approve the purchase of a mobile stage for the KI Convention Center.

BACKGROUND

The KI Convention Center is in need of replacing the original staging for the Center. New staging was purchased for the expansion back in 2015. The original staging from before the expansion has become old and unstable.

The Purchasing Dept. obtained a bid from the company that provided the original stage. The new stage will be compatible with the one purchased from the same company in 2015.

RECOMMENDATION

Approve purchase of a new stage from StageRight Corporation for $33,322.00 using KI Maintenance Funds.

FISCAL IMPACT

ATTACHMENTS

1. KI Convention Center - Portable Stage - 080219

StageRight Proposal
For
KI Convention Center - City of Greenbay

August 2, 2019

Prepared For:
Rick Jensen

30'x24' Mobile Stage

Qty	Description	Part Number	Unit Price	Extended
15	AlphaRoll 6x8 Elite Deck with Black PolyTrac/Gray Carpet Surfaces 16"-24"	360022	$1,748	$26,220
15	AlphaRoll Leg Pack, 24"-32"	107044	$67	$1,005
4	Stair - Tilt & Tote 3 Step, 24"-32"	330083	$416	$1,664
25	Skirt, 8' x 24"-32" Black Janus, Velcro Attachment	321442	$100	$2,500
	Services - Freight			
	Freight to: Green Bay, WI			
	TOTAL:			**$33,322**

Scope of Work / Clarifications

Proposal Includes:

Manufacture and Delivery of above product.

Proposal does not include:

Applicable Taxes (if any)

Clarifications:

All product is per StageRight standard specifications.
Quote is valid for 60 days
Freight Terms: FOB Clare, MI
Shipment: Estimated 90 Days ARO (To be confirmed at time of order)
Warranty: 3 Years
Credit Terms: Net 30

StageRight Corporation
Jeff Schultz
Vice President & General Manager, Sports & Entertainment
Mobile: (989) 615-7355
Toll Free: (800) 438-4499 extension 346
Fax: (989) 386-3500
Email: jschultz@stageright.com

Report to the
Redevelopment Authority
of the City of Green Bay

MEETING DATE	PREPARED BY
August 13, 2019	Krista Cisneroz, Staff

AGENDA ITEM # E.1.

Financial report and check register.

BACKGROUND

RECOMMENDATION

FISCAL IMPACT

ATTACHMENTS

1. Check Register
2. RDA Financial Report 2019

City of Green Bay RDA
Check Register
31-Jul

CHECK #	CHECK DATE	VENDOR NAME	AMOUNT
21042	07/12/2019	CITY OF GREEN BAY	7,500.00
21043	07/12/2019	FEDERAL EXPRESS CORP	76.38
21044	07/12/2019	ENVIRONMENTAL HAZARDS SERVICES, LLC	8.00
21045	07/12/2019	LAFORCE INC	697.00
21046	07/12/2019	BROWN COUNTY REGISTER OF DEEDS	60.00
21047	07/12/2019	WISCONSIN PUBLIC SERVICE CORPORATION	99.22
21048	07/12/2019	NEIGHBOR-WORKS GREEN BAY	15,000.00
21049	07/12/2019	NEIGHBORHOOD HOUSING SERVICES OF GB, INC	1,000.00
21050	07/12/2019	TRANS UNION, LLC	40.00
21051	07/12/2019	ANDERSEN BASEMENT REPAIR INC	16,340.00
21052	07/12/2019	LIGHTHOUSE TITLE INC	50.00
21053	07/12/2019	KAREN WALKER	485.00
21054	07/30/2019	BROWN COUNTY TREASURER	3,000.00
21055	07/30/2019	CITY OF GREEN BAY	24,642.34
21056	07/30/2019	GREEN BAY AREA PUBLIC SCHOOLS	6,198.80
21057	07/30/2019	WISCONSIN MEDIA	158.67
21058	07/30/2019	SHEFCHIK INC.	5,760.83
21059	07/30/2019	REMODEL SHOP	2,599.00
21060	07/30/2019	ANDERSEN BASEMENT REPAIR INC	12,240.00
21061	07/30/2019	LIGHTHOUSE TITLE INC	50.00
			$ 96,005.24

Redevelopment Authority
Financial Report
CDBG
7/31/2019

	2019 Budget	2018 Carry Over	Program Income	Expenses	Obligated	Remaining Balance
Park Improvements	-	200,300.00	-	110,000.00	-	90,300.00
Public Works Improvements	-	207,281.41	-	-	-	207,281.41
Public Service	-	62,408.97	-	30,728.42	-	31,680.55
Fair Housing	-	23,750.00	-	5,950.00	-	17,800.00
CDBG Eligible Areas	-	278,167.35	130,937.60	116,423.92	15,482.03	277,199.00
CDBG Eligible Areas-Beautificatio/Art	-	50,000.00	-	7,500.00	-	42,500.00
CDBG Eligible Areas-Lead Lines	-	25,000.00	-	-	-	25,000.00
Economic Development	-	88,084.39	195,504.80	40,000.00	-	243,589.19
ED Blight Elimination-Walnut Street	-	89,904.86	-	4,379.50	-	85,525.36
ED Façade & Demo Loans	-	50,000.00	-	-	-	50,000.00
Administration	-	150,810.40	-	94,742.41	-	56,067.99
	$ -	**$ 1,225,707.38**	**$ 326,442.40**	**$ 409,724.25**	**$ 15,482.03**	**$ 1,126,943.50**

Redevelopment Authority
Financial Report
CDBG
7/31/2019

-

Redevelopment Authority
Financial Report
HOME
7/31/2019

	2019 Budget	2018 Carry Over	Program Income	Expenses	Obligated	Remaining Balance
Single Family Rehab Loan Program	-	350,881.55	99,729.65	137,756.33	269,708.36	43,146.51
Housing Development Projects	-	475,599.96	-	83,075.00	189,999.96	202,525.00
CHDO Projects	-	4,615.63	14,824.72	4,615.63	-	14,824.72
Downpayment Closing Cost Assistance	-	100,000.00	-	50,000.00	-	50,000.00
Administration	-	52,575.56	12,728.26	47,828.83	-	17,474.99
	$ -	**$ 983,672.70**	**$ 127,282.63**	**$ 323,275.79**	**$ 459,708.32**	**$ 327,971.22**