# AGENDA OF THE COMMON COUNCIL

## TUESDAY, MARCH 21, 2023, 6:00 PM
## In person at City Hall, Room 203 - Council Chambers.
## Virtual attendance also available via Zoom.

**A. Zoom Meeting Information.**

1. This item contains instructions and information for the Zoom virtual meeting. It also contains a link to the comment form.

**B. Roll Call.**

**C. Pledge of Allegiance.**

**D. Invocation.**

**E. Approval of Minutes.**

**F. Approval of the Agenda.**

**G. Report by the Mayor.**

**H. Announcements.**

**I. Appointments.**

1. **Appointments:**

   Transit Commission
   Hector Rodriguez, 1460 Waterford Dr., Green Bay, WI 54313
   Term to expire: February 1, 2024 (filling the remainder of a term)

   **Reappointments:**

   Green Bay Area Room Tax Commission
   Larry Vesely, 1715 E. Sonata Dr, Green Bay, WI 54311
   Term to expire: April 1, 2024

   Green Bay Public Arts Commission

Rissel Peguero Almonte, 110 Little Swiss Pl., Green Bay, WI 54302
Term to expire: April 1, 2026

Zoning & Planning Board of Appeals
Noel Halverson, 2443 Deckner Ave., Green Bay, WI 54302
Term to expire: April 1, 2026

2. Interim Treasurer, effective April 8, 2023
   Celestine Jeffreys, 614 Kellogg St, Green Bay, WI 54303

## J. Ordinances - Second Reading for Adoption.

1. Zoning Ordinance No. 03-23
   An Ordinance creating a planned unit development (PUD) overlay district for property on the 1100 Block of East Walnut Street.

2. General Ordinance 05-23
   An ordinance creating a floodplain overlay district, subject to Department of Natural Resources required revisions.

## K. Report of the Redevelopment Authority (March 14, 2023).

1. To approve and recommend to the Common Council the City of Green Bay's 2023 Annual Action Plan for Community Development Block Grant Program (CDBG) and HOME Investment Partnerships Program (HOME) entitlement programs.

2. To terminate and replace a grant agreement with BFAM, LLC for the renovation of 317 Dousman Street.

## L. Report of the Improvement & Services Committee (March 15, 2023).

1. To approve the request by Meade Electric Co. Inc. to enter into an annual Hold Harmless Agreement for access to the City of Green Bay sewer system to conduct inspections of the sewer mains and laterals.

2. To approve the request by Department of Public Works to contract with Kone, Inc., the City's elevator maintenance contractor, to complete repairs to Elevator #4 at the Pine Street Ramp in the amount of $29,995.

3. To approve the request by Department of Public Works to award Danz and Military Landfills - Native Planting Maintenance to NES Ecological Services in the amount of $28,500.

4. To approve the request by Department of Public Works to enter into a Memorandum of Understanding between the City of Green Bay and the University of Wisconsin – Green Bay to allow access to the Tank Farm Pond property (Parcels 6-18 and 6-29) for data collection and on-going research.

5. To approve the request by Department of Public Works to purchase a replacement tractor for Closed Circuit Television (CCTV) inspection of sanitary and storm sewer facilities within the City.

6. To approve the request by Department of Public Works to amend the Brown County Solid Waste Management Agreement for 2023 establishing a "Direct Haul Contract Rate" for waste hauled directly to the landfill by the City of Green Bay instead of hauling to the transfer station.

7. To approve ordering the improvements constructed and levying the assessments for asphalt pavement for S. Maple Avenue from Ninth Street to North Termini.

8. To hold the list of Department of Public Works projects to be included in the 2023 City of Green Bay Capital Improvement Plan until the next regularly scheduled Improvement and Services Committee meeting (held from the March 1, 2023 Improvement & Services meeting).

9. To approve the award of the contract PAVEMENT 1-23 S. VAN BUREN STREET RECONSTRUCTION to Peters Concrete Company in the amount of $1,388,022.95.

10. To approve the award of the contract PAVEMENT 2-23 HURON ROAD SIDEWALK ADDITION to Peters Concrete Company in the amount of $299,226.20.

11. To approve and accept the additional rights-of-way required for the reconstruction of School Place – Oak Street to 13th Avenue.

| Part of Tax Parcel # | Interest Required | Owner Name(s) | Amount |
|---|---|---|---|
| 3-660 | Fee | Donna M & Melissa M Corpus | $1,400 |
| 3-662 | Fee | Jackie Micolichek | $1,400 |

12. To receive and place on file the actions taken by Department of Public Works.

    A. Granting of Licenses

        1. Sidewalk Builder

            a. Allied Concrete Construction Inc.
            b. Loch Construction Co., Inc.
            c. Three Corners Concrete LLC
            d. Verheyen Construction Co.

        2. Underground Sprinkler System

            a. Roberts Quality Irrigation, LLC

## M. Report of the Protection & Policy Committee (March 13, 2023).

1. To approve a change of agent to Sarah J. Thibodeau for Kwik Trip, Inc. (Kwik Trip 420) at 1712 E. Mason St.

2. To grant an application for a "Class A" Liquor and Class "A" Beer license for Sarpanch 3, Inc. at 1335 Main St. with a license premises description as "shelves, in coolers, behind cash counter," with the approval of the proper authorities (Currently licensed as ASN Petroleum).

3. To grant an application for a "Class A" Liquor and Class "A" Beer license for Oasis Enterprises LLC at 612 S. Military Ave. with a license premises description as "BEHIND THE COUNTER, SHELVES, BACKOFFICE," with the approval of the proper authorities (Currently licensed with a Class "A" Beer license as Ran-di Enterprises LLC).

4. To deny the appeal by Gregory and Jennifer Van Den Nelzen, 3486 Yorkshire Rd, regarding Building Inspector ORDER 22-1588-106, Case #132019, issued November 4, 2022 (staff confirmed they will not require the property owner to do additional work regarding this water issue if the work under the order is completed).

5. To refer to staff a communication by Ald. Wery regarding the audio listening devices at City Hall, amended to limit the scope of the referral to internally gather information regarding the possible scope of work, including identifying entities able to perform the work, and any implications regarding legal proceedings. Staff will return to P & P with information.

6. To refer to staff a request by Ald. Wery, which was referred from the Parks Committee, for consideration with possible action on the creation of a broad surveillance ordinance and policy. For full transparency to the public, employees and elected officials, all requests for surveillance must be submitted by each department and approved by City Council.

   *The Council may convene in closed session pursuant to Section 19.85(1)(g), Wis. Stats., for the purpose of conferring with legal counsel for the governmental body who is rendering oral or written advice concerning strategy to be adopted by the body with respect to litigation in which it is or is likely to become involved. The Council will thereafter reconvene in open session pursuant to Section 19.85(2), Wis. Stats., to take action on items discussed in closed session, if appropriate, and to consider the remainder of the agenda.*

7. Informational Only: The Liquor Violation Report.

8. Informational Only: The Clerk's Office Liquor Licensing Report

## N. Report of the Protection & Policy Committee Granting Operator Licenses.

1. Operator Licenses

## O. Report of the Plan Commission (March 13, 2023).

1. To amend the City's Comprehensive Plan for properties at 1035 VanderBraak (#20-350), 1030 Weise (#20-349), and unaddressed properties near 1119 VanderBraak (#20-381, #20-382 & #20-383) from Commercial to Low-Medium Density Residential. (Public Hearing held 03/13/23)

2. To establishment of a Planned Unit Development (PUD) for the Development of an Auto sales Use at 1577 Langlade Avenue (6-299-A & 6H-299-A-8), subject to the following conditions:

a. Adoption of the draft PUD; and
b. Consolidation of the two (2) individual lots.

(Public Hearing held 03/13/23)

## P. Report of the Finance Committee. (March 14, 2023)

1. To approve the reimbursement of the City portion of taxes only, excluding the pavement special assessment, for the parcels identified by the Assessor that would have met the exemption requirement had the request been submitted by the deadline. Parcels include 14-426 (612 Stuart St) and 14-410-A (618 Stuart St) for St. John Evangelist Homeless Shelter Inc for a total reimbursement of $5,356.64 from 2023 contingency account.

2. To deny the reimbursement of the City portion of taxes, for parcel 14-410 (304 S Quincy St) for St. John Evangelist Homeless Shelter Inc as identified by the Assessor as not meeting the exemption requirements regardless of deadline.

3. To deny the reimbursement of the City portion of taxes, for parcel 5-1523-1 (610 N Broadway) for N.E.W. Community Clinic as identified by the Assessor as not meeting the exemption requirements regardless of deadline.

4. To purchase camera and related equipment for the GBPD Investigative Division from Foster + Freeman for $37,341.91.

5. To approve the resolution of financial institutions the City does business with.

6. To amend 2022 budget lines.

7. To amend 2023 budget lines.

8. To receive and place on file a request by Ald. Wery to the Finance Committee which states: "Request an independent/outside cyber investigation of the audio listening system at city hall to include who accessed it and when since their installation. Were any audio recordings downloaded/saved?"

9. To approve the 2025 and 2027 community leader agreements for the NFL Draft Bid Booklets to be submitted by the Green Bay Packers.

## Q. Report of the Park Committee. (March 15, 2023)

1. To approve funding $32,500 to go towards 1/3 of the total cost of a new Sam and Sadie otter memorial/sculpture/exhibit at the Wildlife Sanctuary, with the Friends of the Wildlife Sanctuary funding the remaining 2/3 of the total cost.

2. To approve the donation of a turtle sculpture from the Baird Creek Preservation Foundation with the condition that staff will work with the artist and the Baird Creek Preservation Foundation to select the best location within the Baird Creek Greenway.

## R. Report of the Personnel Committee.

1. To approve the request to fill the following replacement position and all subsequent vacancies resulting from internal transfers.
   a. GIS Analyst

2. To refer to staff to prepare a proposal to the committee which includes solutions and costs to secure City Hall; a report that details the police calls to City Hall and a draft of an employee survey to gauge employee opinions on City Hall security.

3. Consideration with possible action on the 2023 Agreement Between the City of Green Bay and the Green Bay Professional Police Association (From the February 28, 2023 Personnel Committee Meeting).

*The Common Council may convene in closed session pursuant to Section 19.85(1)(e), Wis. Stats., for purposes of deliberating or negotiating public employee contracts for competitive or bargaining reasons. The Common Council will thereafter reconvene in open session pursuant to Section 19.85(2), Wis. Stats., to take action on items discussed in closed session, if appropriate, and to consider the remainder of the agenda.*

## S. Informational.

1. MuniCtReportFeb2023

## T. Resolutions.

1. Resolution authorizing a budget amendment to 2022 budgeted line items.

2. Resolution authorizing a budget amendment to 2023 budgeted line items.

3. Resolution authorizing transfer of funds for the City's portion of property taxes for St. John's (parcel 14-426 for $4,900.97 and 14-410-A for $455.67) for a total of $5,356.64.

4. Resolution designating public depositories and authorizing withdrawal of city moneys.

## U. Ordinances - First Reading and Final Reading for Adoption.

1. Zoning Ordinance No. 05-23
   An Ordinance repealing Zoning Ordinance No. 14-21 and creating a planned unit development (PUD) overlay district for part of 216 South Military Avenue.

2. Zoning Ordinance No. 06-23
   An ordinance creating a planned unit development (PUD) overlay district for part of 216 South Military Avenue (ZP 22-31).

## V. Ordinances - First Reading.

1. Zoning Ordinance No. 07-23
   An Ordinance creating a planned unit development (PUD) overlay district for property on 1577 Langlade Avenue.

2. Miscellaneous Ordinance No.04-23
   An ordinance adopting an amendment to the Smart Growth 2022 Comprehensive Plan of the City of Green Bay pertaining to properties located near the intersections of Vanderbraak, N. Clay, and Weise Streets (Parcel #20-350, #20-349, #20-381, #20-382, #20-383).

## W. Referral of Petitions & Communications.

## X. Adjournment.

1) SUPPLEMENTAL INFORMATION: The Video of this meeting, Agenda, Agenda Packet, and Minutes are available online at www.greenbaywi.gov/Meetings.
2) ACCESSIBILITY: Any person wishing to attend who requires special accommodation because of a disability, should contact the City Safety Manager at 920-448-3125 at least 48 hours before the scheduled meeting time so that arrangements can be made.
3) QUORUM: Please take notice that a majority or quorum of the Common Council will attend this committee meeting and will constitute a meeting of the Common Council for purposes of discussion and information gathering relative to this agenda.
4) REPRESENTATION: The party requesting the communication, or their representative, should be present at this meeting.

# Virtual Meeting Instructions

## 2023-03-21 Common Council

Zoom Meeting Information

Topic: 2023-03-21 Zoom Council
Time: Mar 21, 2023 06:00 PM Central Time (US and Canada)

Join Zoom Meeting
https://us02web.zoom.us/j/89859913439

Meeting ID: 898 5991 3439
Passcode: 895381
One tap mobile
+13052241968,,89859913439#,,,,*895381# US
+13092053325,,89859913439#,,,,*895381# US

Dial by your location
+1 305 224 1968 US
+1 309 205 3325 US
+1 312 626 6799 US (Chicago)
+1 646 931 3860 US
+1 929 205 6099 US (New York)
+1 301 715 8592 US (Washington DC)
+1 253 215 8782 US (Tacoma)
+1 346 248 7799 US (Houston)
+1 360 209 5623 US
+1 386 347 5053 US
+1 507 473 4847 US
+1 564 217 2000 US
+1 669 444 9171 US
+1 669 900 6833 US (San Jose)
+1 689 278 1000 US
+1 719 359 4580 US
+1 253 205 0468 US
Meeting ID: 898 5991 3439
Passcode: 895381
Find your local number: https://us02web.zoom.us/u/ke5H9MBFg

## Public Comments

If you wish to speak at this public meeting or leave a comment, please fill out the online Comment Form prior to the meeting. Online comments will be accepted until 4:30 pm on Council day.

## Additional Information

1. Wisconsin Open Meetings Law still applies
    a. Persons interested in speaking to an item must state their name and address for the minutes.
    b. Committee/Commission/Board members will still follow *Roberts Rules of Order Newly Revised 12th edition.*
2. Please log into the Zoom meeting at least 10 minutes before the meeting begins to ensure a proper connection and that your technology is working.
    a. If you are a Board Member, please log into CivicClerk with a computer, laptop, or tablet device.
3. Once you are in the meeting please mute yourself.
    a. You may unmute yourself when you are called upon to speak.
4. Waiting room
    a. When you call in or connect via web or Zoom app, you will be placed in a "waiting room."
    b. The meeting host will then admit you to the meeting, and mute you upon entrance (you will still be able to hear and or otherwise observe the meeting).
5. Registering
    a. The host may ask you to register for the meeting. A registration link will be sent to you along with the invite. You'll receive another email confirming that you're registered for the meeting.
    b. If you're using a phone, your registration will be tied to an email.
6. Raising your hand
    a. Committee/Commission/Board members—you can either use CivicClerk and request to speak or you can also utilize the "raise your hand" tool in the Zoom platform (you'd need to use a computer or tablet) to let the host know you would like to speak. You can also un-mute yourself and start speaking.
    b. Persons with items on the agenda or other interested parties —you can also utilize the "raise your hand" tool on the Zoom platform via computer or mobile device. You will be allowed to speak once the committee, commission, or board has moved to "open the floor for interested parties to speak." Once discussion on your agenda item has concluded, the host will mute you, unless the committee opens the floor again.
7. What devices should I use?
    a. Smart phone (please see more detailed instructions on page 3)
    b. Land line
    c. Tablet— in advance of the meeting, please download the Zoom Meeting app by using either the Apple Store or the Play Store. You will be asked to input your name, to identify you for the meeting.
    d. Computer— you can access the meeting through a web browser by clicking on the meeting link, or through the Zoom Meeting app. If using the app, please download it in advance of the meeting. You will be asked to input your name, to identify yourself for the meeting.
    e. For tablet and computer users--if you download the app you may be asked to verify your email.

8. Zoom etiquette
    a. Muting yourself when you're not speaking will prevent your background noise from interfering with others' ability to listen to and participate in the meeting.
    b. If you're using a telephone, please identify yourself with your phone number and state your name and address before you speak. Zoom meeting hosts can see only your telephone number and will ask you to identify yourself.
9. Closed session
    a. Persons in the Zoom meeting will be put into a waiting room while the committee/commission/board meets in Closed Session. Participants will be admitted back into the Zoom meeting once the committee reconvenes in Open Session.
    b. Persons watching a Common Council meeting live on YouTube will see a gray screen with the City logo during closed session.
10. Persons interested in attending anonymously or listening to the meeting may call in by dialing *67 followed by the phone number in the Zoom Meeting Information box.

## Calling into the Zoom meeting using a smartphone

1. Dial the phone number listed at the beginning of this document.
2. When prompted, enter the Meeting ID number followed by **#**
3. Once you are in the meeting, notify the meeting host that you are in and state your name.
4. If you do not wish to speak, please make sure your phone is on **Mute**
    a. If you're using a smartphone, look at your screen and click the Mute button

**iPhone Users** **Android Users**

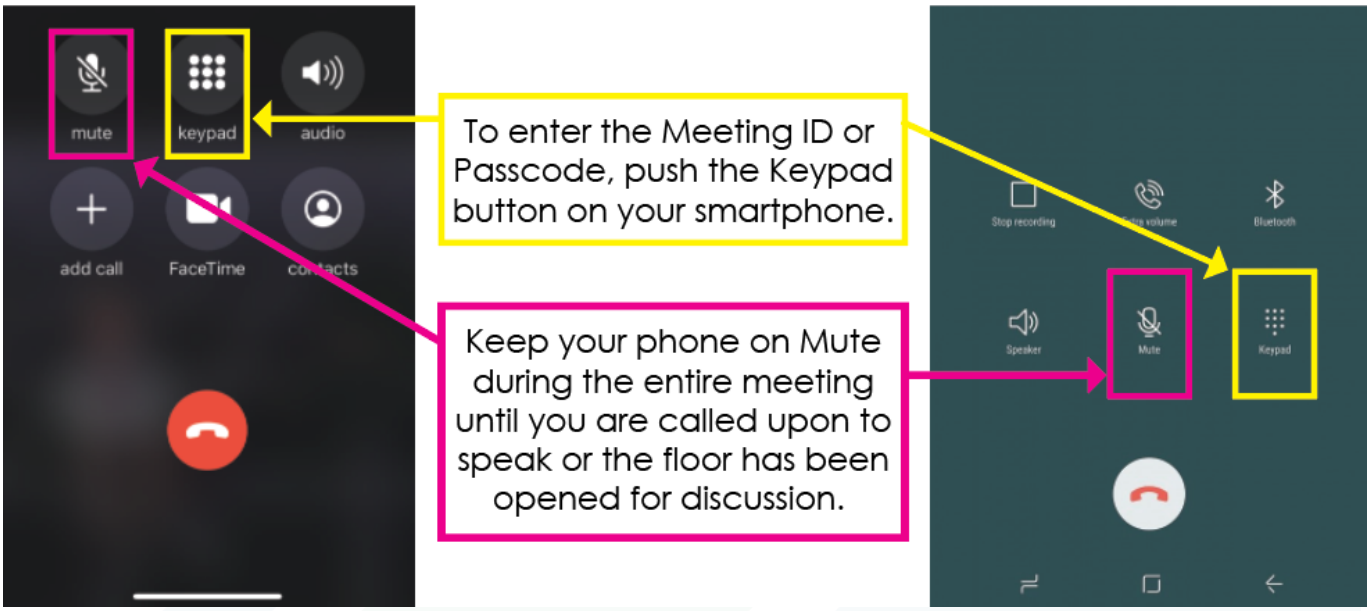

**ZONING ORDINANCE NO. 03-23**

**AN ORDINANCE**
**CREATING A PLANNED UNIT DEVELOPMENT (PUD)**
**OVERLAY DISTRICT FOR PROPERTY ON THE**
**1100 BLOCK OF EAST WALNUT STREET**

THE COMMON COUNCIL OF THE CITY OF GREEN BAY DOES ORDAIN AS FOLLOWS:

**SECTION 1.** Section 44-30, Green Bay Municipal Code, together with the zoning map referred to therein, is hereby amended by establishing a Planned Unit Development Overlay District on the following described properties, as also depicted on Exhibit A - Location Map:

Parcel Identification and Legal Description:

| Parcel No. | Address | Legal Description |
|---|---|---|
| 14-195 | 1147 E Walnut Street, Green Bay, WI 54301 | 0.202 AC M/L PLAT OF NAVARINO LOT 748 |
| 14-196 | 1159 E Walnut Street, Green Bay, WI 54301 | 0.202 AC M/L PLAT OF NAVARINO LOT 749 |
| 14-197 | 1161 E Walnut Street, Green Bay, WI 54301 | 0.202 AC M/L PLAT OF NAVARINO LOT 750 |
| 14-198 | 1165 E Walnut Street, Green Bay, WI | 0.101 AC M/L PLAT OF NAVARINO W 26.5 FT OF LOT 751 |
| 14-199 | 1167 E Walnut Street, Green Bay, WI 54301 | 0.101 AC M/L PLAT OF NAVARINO E 26.5 FT OF LOT 751 |
| 14-200 | 1173 E Walnut Street, Green Bay, WI 54301 | 0.202 AC M/L PLAT OF NAVARINO LOT 752 |
| 14-201 | 1177 E Walnut Street, Green Bay, WI 54301 | 0.137 AC M/L PLAT OF NAVARINO S 112 FT OF LOT 753 |
| 14-202 | 111 N Roosevelt Street, Green Bay, WI 54301 | 0.065 AC M/L PLAT OF NAVARINO N 53 FT OF LOT 753 |

Land Area comprises approximately 52,795 square feet/1.21 acres

**SECTION 2.** Pursuant to Chapter 44, Article XX, Green Bay Municipal Code, as it applies, the following conditions are imposed:

A. Purpose and Intent. The Planned Unit Development (PUD) is being utilized to

permit the development of a mixed-use apartment building with 43 living units and no greater than 5,000 square feet of office/community service space. The overall appearance and design of the site, site improvements and the building shall be in substantial conformance with the attached Exhibits and as regulated within this PUD.

B. Development Site. Area included within this PUD currently consists of eight (8) individual parcels; seven (7) that front East Walnut Street and one (1) that fronts North Roosevelt Street, as specified in Section 1 of this ordinance. The eight (8) individual parcels shall be combined to a single tax parcel prior to issuance of administrative site plan approval, building permit issuance and occupancy permit.

C. Land Use Regulations. The principal and accessory land uses which may be established and/or maintained on the subject property are as follows:
   1. Principal uses (within a single structure):
      a. 43 residential dwelling units consisting of five (5) one-bedroom, twenty-six (26) two-bedroom, and twelve (12) three-bedroom units.
      b. No greater than 5,000 square foot office space/community service facility.
   2. Accessory uses customarily associated with multiple family dwelling and office space including lobby, mail room, janitorial services, community room, resident storage areas, office space associated with the residential use, home occupations, childcare for residents, and other uses deemed appropriate by the Zoning Administrator.

D. Prohibited Uses. The PUD limits certain uses from being established on the site or as accessory to the multi-family dwelling and office principal uses including rooming/boarding houses, shelter facilities, transitional housing, dormitories, assisted living/nursing homes, commercial uses typically associated with dwelling (family daycares and live-work units). All other proposed uses are subject to a PUD amendment.

E. Dimensional and Area Requirements. Dimensional and area requirements for principal structure and surface parking on the subject property shall be regulated as follows:
   1. General Site
      a. Lot Size. Minimum lot area is 52,795 square feet/1.21 acres
      b. Floor Area Ratio (FAR) Range: 1.0-1.5
      c. Maximum Impervious Surface: 80%
      d. Accessory building(s) shall be regulated as if in the OR Office Residential Zoning District.
   2. Building
      a. Front Yard Setbacks
         1. East Walnut Street: 5 feet
         2. North Roosevelt Street: 5 feet
      b. Side Yard Setback (west lot line): 7 feet

c. Rear Yard Setbacks (north lot line): 8 feet
d. Maximum Height: Principal building shall not exceed 45 feet in height.

3. Surface Parking/Refuse Enclosure.
   a. Front Yard Setbacks
      1. East Walnut Street: Shall be located with building situated in front of the parking facility
      2. North Roosevelt Street: 5 feet
   b. Side Yard Setback (west lot line): 5.5 feet
   c. Rear Yard Setbacks (north lot line): 6 feet

F. Access Circulation and Parking. Access, circulation, and parking within the PUD area shall meet the standards as set forth within the Green Bay Zoning Code, Article XVIII of the Green Bay Municipal Code, and as modified as follows:
   1. The site is limited to one (1) vehicular access driveway with ingress/egress from North Roosevelt Street approximately 115 feet north of the East Walnut Street intersection.
   2. Development shall provide a minimum of 56 parking spaces
      a. 6 may be "stacked" but must be assigned to 6 of the three-bedroom units.
      b. 40 stalls shall be dedicated to residents.
      c. 10 stalls shall be dedicated/assigned to the office uses but may, at the discretion of the property owner, be assigned to residents during evening hours.
   3. Bicycle parking shall be provided near the northern pedestrian entrance.
   4. Pedestrian access shall be provided from all public streets with public sidewalks adjoining the development and connected via an internal pedestrian network to the entrances of the principal structure.

G. Architectural Design. All building elevations shall generally comply with Exhibit C and subject to the following requirements:
   1. Four-sided design. All sides of the building shall include materials and design characteristics similar to and compatible with those on the front.
   2. Exterior Materials. Building materials shall be durable and appropriate for the residential district as well as being regulated as follows:
      a. Exterior building façades shall be predominately fiber cement siding with the following considerations:
         1. Brick or brick veneer knee wall on the south elevation, and portions of the west and east elevations as depicted on Exhibit C.
         2. Brick or brick veneer will be incorporated into the design of the first floor of the office portion of the building as depicted on Exhibit C.
         3. Siding shall be both vertical and horizontal as well as siding panels be incorporated to help differentiate components of the structure, break up the mass of single material and provide relief and interest to the building's exterior.

b. Windows and doors. Windows shall include trim and all building entrances shall include a canopy or other roofing element over the doorway.
c. Accessory structures. Accessory structures are limited to no greater than 16 feet in height and shall match the character of the principal structure, reflected in colors, materials, windows, and architectural features.

H. Lighting. All lighting within the PUD area shall meet the standards as set forth within the Green Bay Zoning Code, Article V of the Green Bay Municipal Code.

I. Signage. All signage within the PUD area shall meet the standards of the OR Office Residential Zoning District, as set forth within Chapter 30 of the Green Bay Municipal Code.

J. Refuse and Mechanical Equipment. Screening of refuse material containers and mechanical equipment throughout the PUD area shall meet the standards as set forth within the Green Bay Zoning Code, Article XIX of the Green Bay Municipal Code.

K. Landscaping and Transitional Yards. Landscaping within the PUD area shall meet the standards as set forth within the Green Bay Zoning Code, Article XIX of the Green Bay Municipal Code with the following addition:
1. Increased level of buffering shall include the installation of a 6-foot-tall opaque vinyl fence running along the entire west and north property lines, excluding front yard building setbacks.

L. Stormwater Management and Grading. A storm water management and grading plan meeting the standards established by the Department of Public Works shall be submitted to and approved by the City prior to the issuance of building permits. The purpose of these standards to manage stormwater runoff volumes and quality but shall also:
1. Be of human-scale interest with native plantings encouraged.
2. Stormwater management facilities shall function not only as a utility but also as site amenity.
3. Stormwater management areas such as bioretention areas, rain gardens, stormwater trees, or other plantings may count toward required landscape minimums of subsection J, above.

M. Compliance with all of the regulations of the Green Bay Municipal Code not covered under the PUD.

**SECTION 3.** The provisions of this ordinance, including, without limitation, the granting of a conditional-use permit and all obligations, conditions, restrictions, and limitations related thereto shall run with and be jointly and severally binding upon the fee simple owner and the beneficial owner of all or any portion of the subject property. All obligations, requirements, and rights of the owner shall run with the land and shall

automatically be assigned to be binding upon and inure to the benefit of its successors and assigns, including, but not limited to, any entity acquiring any financial interest in the subject property and/or any subsequent owner and/or beneficial owner of all or any portion of the subject property.

**SECTION 4.** Each exhibit which is attached to this ordinance is deemed to be and is expressly made a part of and incorporated into this ordinance to the same extent as if each such exhibit, and the plans identified therein, had been set forth in its entirety in the body of this ordinance.

**SECTION 5.** All ordinances or parts of ordinances, in conflict herewith are hereby repealed.

**SECTION 6.** In addition to all other remedies available to the City of Green Bay, the City may decline to issue any building or other permits otherwise required by any ordinance of this City while any violation of this ordinance remains uncured.

**SECTION 7.** If any provision in this ordinance is held invalid or unconstitutional by any court of competent jurisdiction, such a decision shall not affect the validity of any other provision of this ordinance. It is hereby declared to be the intention of the City of Green Bay that all provisions of this ordinance are separable.

**SECTION 8.** This ordinance shall not take effect until a public hearing is held thereon as provided by Chapter 44, Article II, Division 2, Section 44-82 Zoning Amendments, Green Bay Municipal Code, and the adoption and publication of this ordinance.

Dated at Green Bay, Wisconsin, this _____ day of _____, 2023.

APPROVED:

_____
Eric Genrich, Mayor

ATTEST:

_____
Celestine Jeffreys, City Clerk

db:

**Attachments:**
Exhibit A – Location Map
Exhibit B – Conceptual Site Plan
Exhibit C – Conceptual Building Elevations

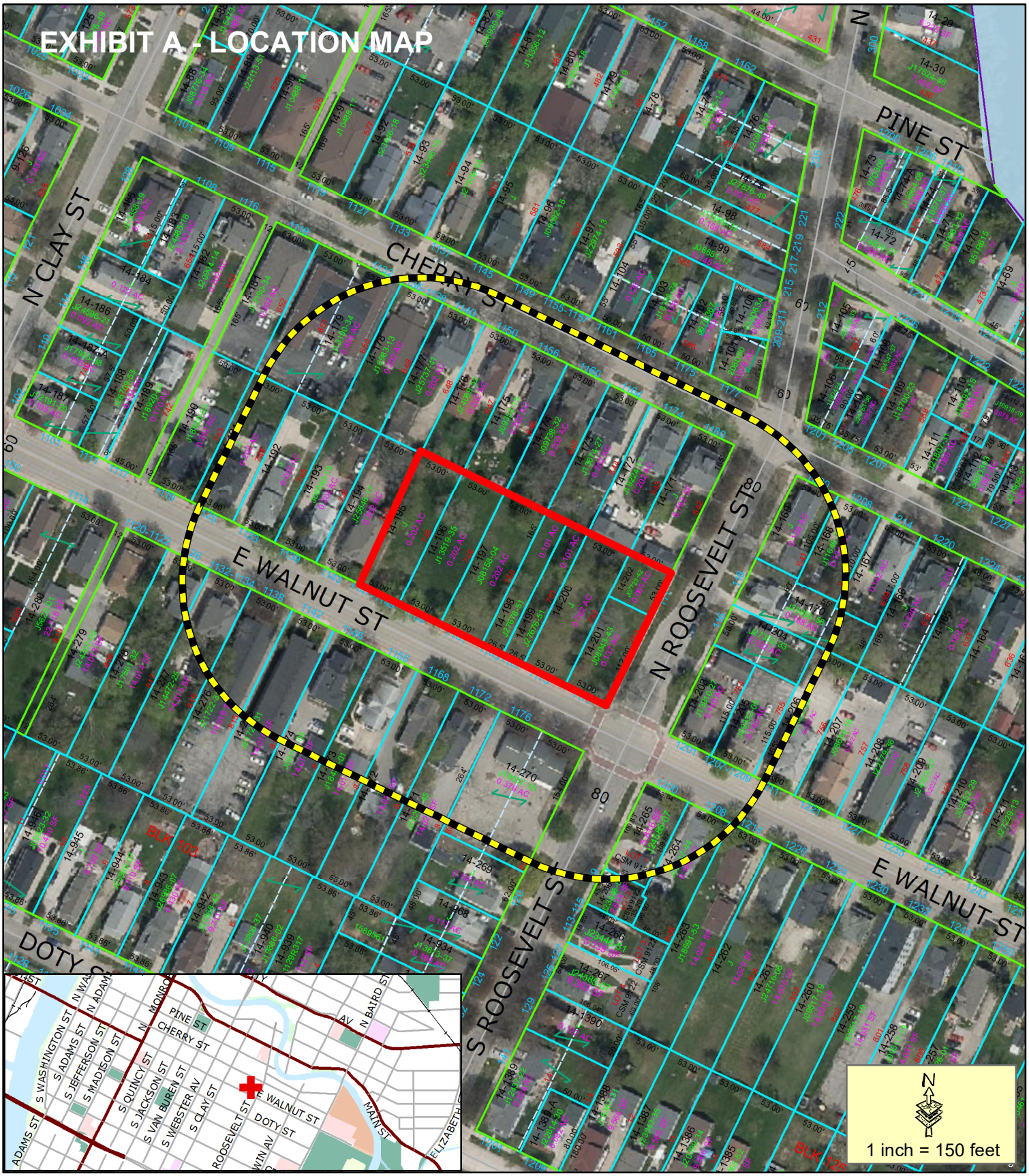


Proposed PUD

200' Property Owner Notice

This is a compilation of records and data located in various City of Green Bay offices and is to be used for reference purposes only. The City of Green Bay is not responsible for any inaccuracies or unauthorized use of the information contained within. No warranties are implied.
Map prepared by DB

**Zoning Petition (ZP 23-03)**
**Proposed Planned Unit Development (PUD) at**
**1100 Block East Walnut St**

CITY OF GREEN BAY 1854 Titletown, USA

# EXHIBIT B - CONCEPTUAL SITE PLAN

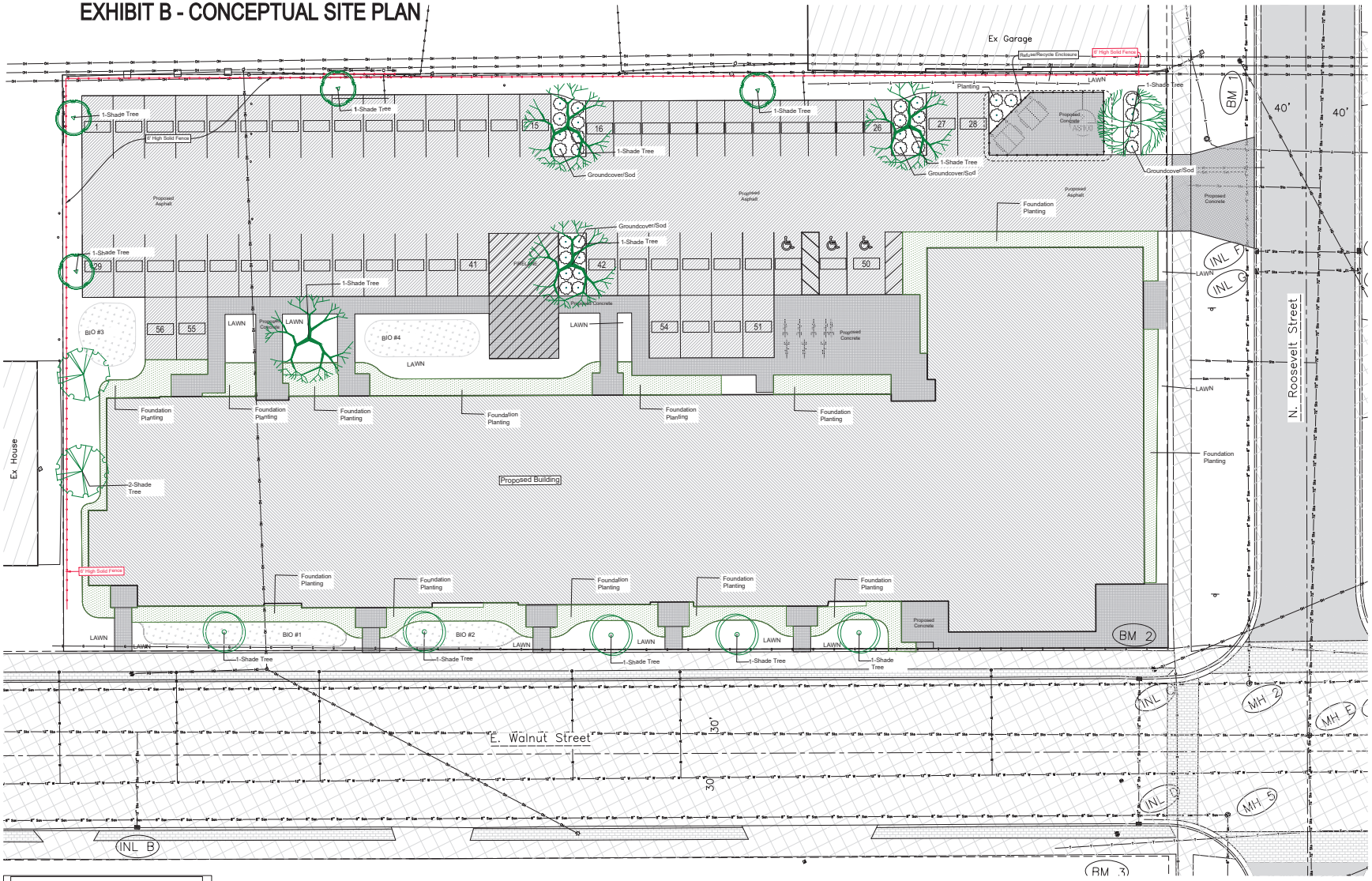


## KEYNOTES PER SHEET

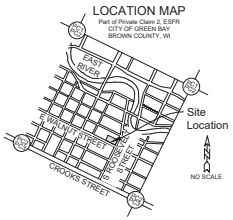


Landscape Requirements

Perimeter Buffer: 6' Height with 80% or more opaque. 1 Tree + 5 Shrubs per 50 ' length.
Actual = 6' Tall Solid Fence on West & North Property lines.
Actual = 3 trees on West, North Side overhead wires do not allow room for trees.

Interior Parking Lot: 1 Tree per 10 parking spaces
Total Parking Spaces = 56
Trees Required = 6
Actual Trees = 6
Required Sod or Groundcover
Actual = Low Grow Sumac or Lawn

Parking Perimeter: Screen 6' Tall along adjacent Properties.
Actual - 6' Tall Solid Fence
Frontage - 3' wide strip with 1 tree per 40'
Actual Frontage = 3
Actual Trees = 2, 5 Shrubs
Shrubs height = 2' (planting bed located in vision triangle.)

Building Foundation Landscaping: Building adjoining parking areas, walkways & open space need plant material.
Actual = North (Parking) , East & South (Road Frontage)
Actual = Mix of trees, shrubs, evergreens and perennials.

General: No Tree more than 50% of total trees.
Trees to be determined.

Dumpsters have fence to screen.

Landscape Design by : Christine Kosiorek, PLA
Lowney's Landscaping Center, Inc.
1177 Walnut St.
Appleton, WI
(920)739-2840
Jan. 24, 2023

## LEGEND

| | |
|---|---|
| CATV CATV | Underground Cable TV |
| FO FO | Underground Fiber Optic |
| OH OH | Overhead Electric Lines |
| | Utility Guy Wire |
| San San | Sanitary Sewer |
| Sto Sto | Storm Sewer |
| E E | Underground Electric |
| G G | Underground Gas Line |
| T T | Underground Telephone |
| | Water Main |
| | Fence - Steel |
| | Fence - Wood |
| | Fence - Barbed Wire |
| | Treeline |
| | Railroad Tracks |
| | Culvert |
| 800 | Index Contour |
| 790 | Intermediate Contour |
| | Delineated Wetlands |
| | Sanitary MH / Tank / Base |
| | Clean Out / Curb Stop / Pull Box |
| | Storm Manhole |
| | Inlet |
| | Catch Basin / Yard Drain |
| | Water MH / Well |
| | Hydrant |
| | Utility Valve |
| | Utility Meter |
| | Utility Pole |
| | Light Pole / Signal |
| | Guy Wire |
| | Electric Pedestal |
| | Electric Transformer |
| | Air Conditioner |
| | Telephone Pedestal |
| | Telephone Manhole |
| +709.9 | Ex Spot Elevation |
| | CATV Pedestal |
| | Gas Regulator |
| | Railroad Signal |
| | Sign |
| | Tower / Silo |
| | Post / Guard Post |
| | Satellite Dish |
| | Large Rock |
| | Flag Pole |
| | Deciduous Tree |
| | Coniferous Tree |
| | Bush / Hedge |
| | Stump |
| | Soil Boring |
| | Benchmark |
| | Asphalt Pavement |
| | Concrete Pavement |
| | Gravel |
| | Proposed Building |
| | Proposed Asphalt |
| | Proposed Concrete |
| | Proposed Gravel |

10 0 10 20 30


DAVEL ENGINEERING & ENVIRONMENTAL, INC.
Civil Engineers and Land Surveyors
1164 Province Terrace, Menasha, WI 54952
Ph: 920-991-1866 Fax: 920-441-0804
www.davel.pro


1/27/2023 10:51 AM J:\Projects\7485for\dwg\Lowney\City East Landscape Concept.dwg Printed by: tim


eua
333 East Chicago Street
Milwaukee, WI 53202
(414) 271-5350
www.eua.com
milwaukee | madison | green bay | denver | atlanta


KEY PLAN

ISSUANCE AND REVISIONS

| DATE | DESCRIPTION |
|---|---|

**PROGRESS DOCUMENTS NOT FOR CONSTRUCTION**

These documents reflect progress and intent and may be subject to change, including additional detail. These are not final construction documents and shall not be used for final bidding or construction-related purposes.

PROJECT INFORMATION

CITY EAST APARTMENTS

1177 WALNUT ST.
GREEN BAY, WI 54301

PROJECT NUMBER: 121366-01
PROJECT MANAGER: CR

SHEET INFORMATION

SHEET NAME: LANDSCAPING Concept Plan

SHEET NUMBER: **L100**

© 2022 Engeleen Uhen Architects, Inc.

# EXHIBIT C.1 - CONCEPTUAL ELEVATIONS

## SHEET NOTES - EXTERIOR ELEVATIONS

| | |
|---|---|
| 1 | SEE SHEET A3000 FOR EXTERIOR FRAME TYPES AND DIMENSIONS |
| 2 | PROVIDE CONTINUOUS SEALANT AND BACKER ROD AT ALL PRECAST CONCRETE JOINTS |
| 3 | ALL INSIDE AND OUTSIDE CORNERS OF PRECAST TRIM TO NOT BE MITERED |
| 4 | EXTERIOR SIGNAGE ON BUILDING TO BE COORDINATED AND VERIFIED WITH ARCHITECT, OWNER AND SIGNAGE VENDOR |
| 5 | ALL VERTICAL INSIDE CORNERS TO HAVE 1/2" MOVEMENT JOINT |
| 6 | MJ = INDICATES MOVEMENT JOINT - 1/2" GAP |
| 7 | PJ = INDICATES METAL PANEL JOINT - 1/8" GAP |

## KEYNOTES PER SHEET

| | |
|---|---|
| 0731 | ASPHALT SHINGLES |
| 0746-01 | LAP SIDING |
| 0746-02 | PANEL SIDING |
| 0746-04 | VERTICAL SIDING |
| 0746-05 | TRIM BOARD |
| 0762-15 | PREFINISHED METAL DOWNSPOUT |
| 2337-01 | LOUVER TO MATCH ADJACENT MATERIAL COLOR, TYP |
| Div 04 | Masonry |

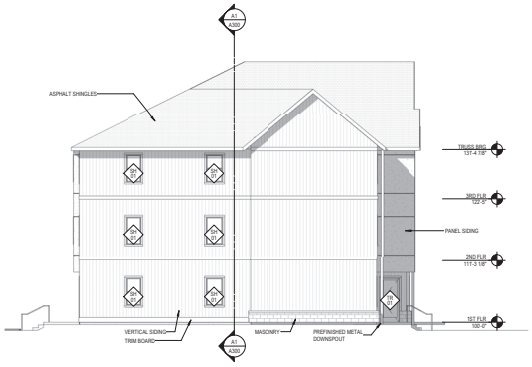


C3 WEST ELEVATION 1
1/8" = 1'-0"

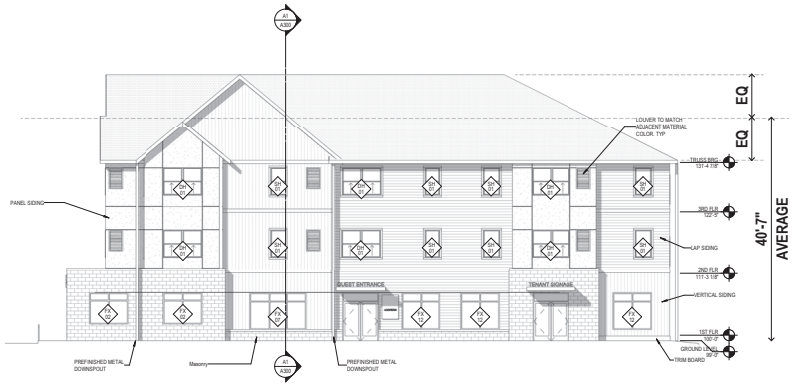


C6 EAST ELEVATION
1/8" = 1'-0"

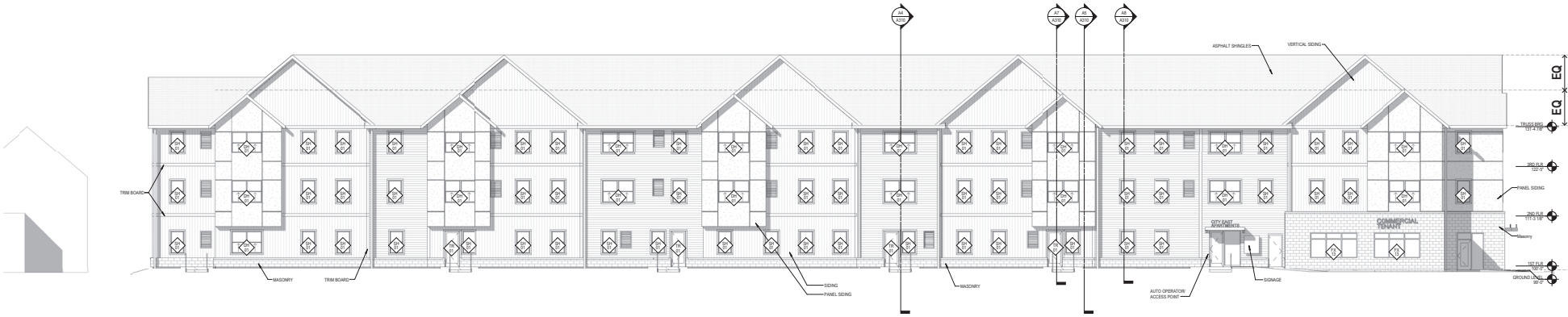


A1 SOUTH ELEVATION
1/8" = 1'-0"


eua
333 East Chicago Street
Milwaukee, WI 53202
(414) 271-5350
www.eua.com
milwaukee | madison | green bay | denver | atlanta


KEY PLAN

ISSUANCE AND REVISIONS

| DATE | DESCRIPTION |
|---|---|

**PROGRESS DOCUMENTS NOT FOR CONSTRUCTION**

These documents reflect progress and intent and may be subject to change, including additional detail. These are not final construction documents and shall not be used for final bidding or construction-related purposes.

PROJECT INFORMATION

CITY EAST APARTMENTS

1177 WALNUT ST.
GREEN BAY, WI 54301

PROJECT NUMBER: 121366
PROJECT MANAGER: CR

SHEET INFORMATION

SHEET NAME: EXTERIOR ELEVATIONS
SHEET NUMBER: A200

© 2022 Eppstein Uhen Architects, Inc.

# EXHIBIT C.2 - CONCEPTUAL ELEVATIONS

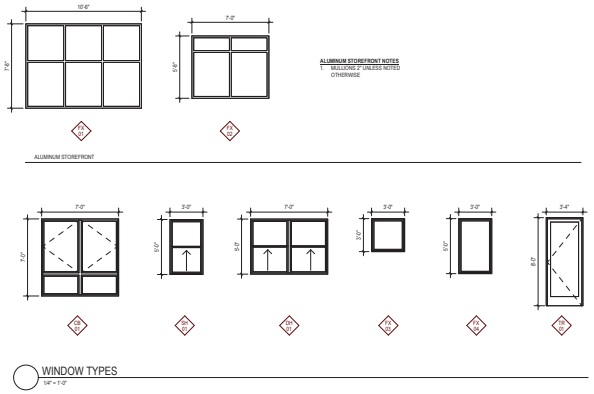


**ALUMINUM STOREFRONT NOTES**
1. MULLIONS 2" UNLESS NOTED OTHERWISE

WINDOW TYPES
1/4" = 1'-0"

## SHEET NOTES - EXTERIOR ELEVATIONS

| | |
|---|---|
| 1 | SEE SHEET A2000-FOR EXTERIOR FRAME TYPES AND DIMENSIONS |
| 2 | PROVIDE CONTINUOUS SEALANT AND BACKER ROD AT ALL PRECAST CONCRETE JOINTS |
| 3 | ALL INSIDE AND OUTSIDE CORNERS OF PRECAST TRIM TO NOT BE MITERED |
| 4 | EXTERIOR SIGNAGE ON BUILDING TO BE COORDINATED AND VERIFIED WITH ARCHITECT, OWNER AND SIGNAGE VENDOR |
| 5 | ALL VERTICAL INSIDE CORNERS TO HAVE 1/2" MOVEMENT JOINT |
| 6 | MJ = INDICATES MOVEMENT JOINT - 1/2" GAP |
| 7 | PF = INDICATES METAL PANEL JOINT - 1/4" GAP |

## KEYNOTES PER SHEET

| | |
|---|---|
| 0731 | ASPHALT SHINGLES |
| 0746-01 | LAP SIDING |
| 0746-02 | PANEL SIDING |
| 0746-04 | VERTICAL SIDING |
| 0748-05 | TRIM BOARD |
| 0782-15 | PREFINISHED METAL DOWNSPOUT |
| 2337-01 | LOUVER TO MATCH ADJACENT MATERIAL COLOR, TYP |

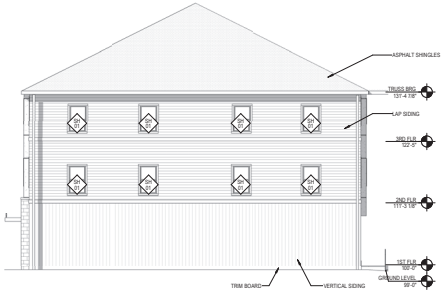


B1 NORTH ELEVATION 1
1/8" = 1'-0"

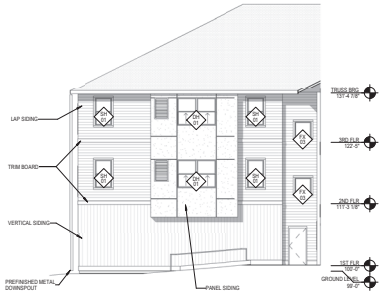


A5 WEST ELEVATION 2
1/8" = 1'-0"

A3 NORTH ELEVATION 2
1/8" = 1'-0"


eua
333 East Chicago Street
Milwaukee, WI 53202
(414) 271-5350
www.eua.com
milwaukee | madison | green bay | denver | atlanta


KEY PLAN

ISSUANCE AND REVISIONS

| DATE | DESCRIPTION |
|---|---|

**PROGRESS DOCUMENTS NOT FOR CONSTRUCTION**
These documents reflect progress and intent and may be subject to change, including additional detail. These are not final construction documents and shall not be used for final bidding or construction-related purposes.

PROJECT INFORMATION

CITY EAST APARTMENTS

1177 WALNUT ST.
GREEN BAY, WI 54301

PROJECT NUMBER: 121366
PROJECT MANAGER: CR

SHEET INFORMATION

SHEET NAME: EXTERIOR ELEVATIONS
SHEET NUMBER: A201

© 2022 Eppstein Uhen Architects, Inc.

**GENERAL ORDINANCE NO. 05-23**

AN ORDINANCE
REPEALING AND RECREATING CHAPTER 44, ARTICLE XIII,
GREEN BAY MUNICIPAL CODE,
RELATING TO FLOODPLAIN OVERLAY DISTRICT

THE COMMON COUNCIL OF THE CITY OF GREEN BAY DOES ORDAIN AS FOLLOWS:

**SECTION 1.** Article XIII of Chapter 44, Green Bay Municipal Code, is hereby repealed and recreated to read:

## DIVISION 1. STATUTORY AUTHORIZATION, FINDING OF FACT, STATEMENT OF PURPOSE, TITLE, AND DEFINITIONS

**44-1041. Statutory authorization.** The ordinance from which this article is derived is adopted pursuant to the authorization in Wis. Stat. § 62.23 and the requirements in Wis. Stat. § 87.30.

**44-1042. Finding of Fact.** Uncontrolled development and use of the floodplains and rivers of this municipality would impair the public health, safety, convenience, general welfare, and tax base.

**44-1043. Statement of purpose.** This Article is intended to regulate floodplain development to:

(1) Protect life, health, and property;

(2) Minimize expenditures of public funds for flood control projects;

(3) Minimize rescue and relief efforts undertaken at the expense of the taxpayers;

(4) Minimize business interruptions and other economic disruptions;

(5) Minimize damage to public facilities in the floodplain;

(6) Minimize the occurrence of future flood blight areas in the floodplain;

(7) Discourage the victimization of unwary land and homebuyers;

(8) Prevent increases in flood heights that could increase flood damage and result in conflicts between property owners; and

(9) Discourage development in a floodplain if any practicable alternative exists to locate the activity, use, or structure outside of the floodplain.

**44-1044. Title.** This Article shall be known as the Floodplain Zoning Code of the City of Green Bay.

**44-1045. Definitions.** Unless specifically defined, words and phrases in this article shall have their common law meaning and shall be applied in accordance with their common usage. Words used in the present tense include the future, the singular number includes the plural and the plural number includes the singular. The word "may" is permissive; "shall" is mandatory and is not discretionary. If a conflict should arise between a definition in this section and any definition(s) applicable elsewhere in this Chapter, the definition in this section shall control.

*A Zone* means that area shown on the Official Floodplain Zoning Map which would be inundated by the regional flood. These areas may be numbered or unnumbered A Zones. The A Zones may or may not be reflective of flood profiles, depending on the availability of data for a given area.

*AH Zone* has the meaning given to *Area of shallow flooding*.

*AO Zone* has the meaning given to *Area of shallow flooding*.

*Accessory structure or use* means a facility, structure, building, or use which is accessory or incidental to the principal use of a property, structure, or building. An accessory structure shall not be used for human habitation.

*Alteration* means an enhancement, upgrade, or substantial change or modification other than an addition or repair to a dwelling or to electrical, plumbing, heating, ventilating, air conditioning, and other systems within a structure.

*Area of shallow flooding* means a designated AO, AH, AR/AO, AR/AH, or VO zone on a community's Flood Insurance Rate Map (FIRM) with a one (1) percent or greater annual chance of flooding to an average depth of one (1) to three (3) feet where a clearly defined channel does not exist, where the path of flooding is unpredictable, and where velocity flood may be evident. Such flooding is characterized by ponding or sheet flow.

*Base flood* means the flood having a one (1) percent chance of being equaled or exceeded in any given year, as published by FEMA as part of a FIS and depicted on a FIRM.

*Basement* means any enclosed area of a building having its floor sub-grade on all sides.

*Breakaway wall* means a wall that is not part of the structural support of the building and is intended through its design and construction to collapse under specific lateral loading forces, without causing damage to the elevated portion of the building or supporting foundation system.

*Building* has the meaning given to *Structure*.

*Bulkhead line* means a geographic line along a reach of navigable water that has been adopted by a municipal ordinance and approved by the Department pursuant to Wis. Stats. § 30.11 and which allows limited filling between this bulkhead line and the original ordinary highwater mark, except where such filling is prohibited by the floodway provisions of this article.

*Campground* means any parcel of land which is designed, maintained, intended, or used for the purpose of providing sites for nonpermanent overnight use by four (4) or more camping units, or which is advertised or represented as a camping area.

*Camping unit* means any portable device, no more than 400 square feet in area, used as a temporary shelter, including but not limited to a camping trailer, motor home, bus, van, pick-up truck, or tent that is fully licensed, if required, and ready for highway use.

*Certificate of compliance* means a certification that the construction and the use of land or a building, the elevation of fill, or the lowest floor of a structure is in compliance with all of the provisions of this article.

*Channel* means a natural or artificial watercourse with definite bed and banks to confine and conduct normal flow of water.

*Coastal floodplain* means an area along the coast of Lake Michigan which is inundated by the regional flood and which is also subject to additional hazard due to wave runup.

*Coastal high hazard area* means an area of special flood hazard extending from offshore to the inland limit of a primary frontal dune along an open coast, and any other area subject to high velocity wave action from storms.

*Crawlway* or *crawl space* means an enclosed area below the first usable floor of a building, generally less than five (5) feet in height, used for access to plumbing and electrical utilities.

*Deck* means an unenclosed exterior structure that has no roof or sides and has a permeable floor which allows the infiltration of precipitation.

*Department* or *DNR* means the Wisconsin Department of Natural Resources.

*Development* means any artificial change to improved or unimproved real estate, including, but not limited to, the construction of buildings, structures, or accessory structures; the construction of additions or alterations to buildings, structures, or accessory structures; the repair of any damaged structure or the improvement or renovation of any structure, regardless of percentage of damage or improvement; the placement of buildings or structures; subdivision layout and site preparation; mining, dredging, filling, grading, paving, excavation, or drilling operations; the storage, deposition, or extraction of materials or equipment; and the installation, repair, or removal of public or private sewage disposal systems or water supply facilities.

*Director* means the Director of the Department of Community and Economic Development or their designee.

*Dryland access* means a vehicular access route which is above the regional flood elevation and which connects land located in the floodplain to land outside the floodplain, such as a road with its surface above regional flood elevation and wide enough for wheeled rescue and relief

vehicles.

*Encroachment* means any fill, structure, equipment, use, or development in the floodway.

*Federal Emergency Management Agency* or *FEMA* means the federal agency that administers the National Flood Insurance Program.

*Flood* or *flooding* means a general and temporary condition of partial or complete inundation of normally dry land areas caused by one of the following conditions:

(1) The overflow or rise of inland waters.
(2) The rapid accumulation or runoff of surface waters from any source.
(3) The inundation caused by waves or currents of water exceeding anticipated cyclical levels along the shore of Lake Michigan.
(4) The sudden increase caused by an unusually high water level in a natural body of water, accompanied by a severe storm or an unanticipated force of nature, such as a seiche, or by some similarly unusual event.

*Flood frequency* means the probability of a flood occurrence which is determined from statistical analyses. The frequency of a particular flood event is usually expressed as occurring, on the average, once in a specified number of years or as a percent chance of occurring in any given year.

*Flood hazard boundary map* means a map designating approximate flood hazard areas. Flood hazard areas are designated as unnumbered A-Zones and do not contain floodway lines or regional flood elevations. This map forms the basis for both the regulatory and insurance aspects of the National Flood Insurance Program until superseded by a Flood Insurance Study and a Flood Insurance Rate Map.

*Flood Insurance Rate Map* or *FIRM* means a map of a community on which the Federal Insurance Administration has delineated both the floodplain and the risk premium zones applicable to the community. This map can only be amended by the Federal Emergency Management Agency.

*Flood insurance study* or *FIS* means a technical engineering examination, evaluation, and determination of the local flood hazard areas. It provides maps designating those areas affected by the regional flood and provides both flood insurance rate zones and base flood elevations and may provide floodway lines. The flood hazard areas are designated as numbered and unnumbered A-Zones. Flood Insurance Rate Maps, that accompany the Flood Insurance Study, form the basis for both the regulatory and the insurance aspects of the National Flood Insurance Program.

*Flood profile* means a graph or longitudinal profile line showing the relationship of the water surface elevation of a flood event to locations of land surface elevations along a stream or river.

*Flood protection elevation* means an elevation of two (2) feet of freeboard above the Regional Flood Elevation. (Also see *freeboard*.)

*Flood storage* means those floodplain areas where storage of floodwaters has been taken into account during analysis in reducing the regional flood discharge.

*Floodfringe* means that portion of the floodplain outside of the floodway which is covered by flood waters during the regional flood and associated with standing water rather than flowing water.

*Floodplain* means land which has been or may be covered by flood water during the regional flood. It includes the floodway and the floodfringe and may include other designated floodplain areas for regulatory purposes.

*Floodplain island* means a natural geologic land formation within the floodplain that is surrounded, but not covered, by floodwater during the regional flood.

*Floodplain management* means policies and procedures used to ensure wise use of floodplains, including mapping and engineering, mitigation, education, and administration and enforcement of floodplain regulations.

*Floodproofing* means any combination of structural provisions, changes, or adjustments to properties and structures, water and sanitary facilities, and contents of buildings subject to flooding, for the purpose of reducing or eliminating flood damage.

*Floodway* means the channel of a river or stream and those portions of the floodplain adjoining the channel required to carry the regional flood discharge.

*Freeboard* means a safety factor expressed in terms of a specified number of feet above a calculated flood level. Freeboard compensates for any factors that cause flood heights greater than those calculated, including ice jams, debris accumulation, wave action, obstruction of bridge openings and floodways, the effects of watershed urbanization, loss of flood storage areas due to development, and aggregation of the river or stream bed.

*Habitable structure* means any structure or portion thereof used or designed for human habitation.

*Hearing notice* means publication or posting meeting the requirements of Wis. Stats. Ch. 985. For appeals, a Class 1 notice, published once at least one week (7 days) before the hearing, is required. For all zoning ordinances and amendments, a Class 2 notice, published twice, once each week consecutively, the last at least one week (7 days) before the hearing, is required. Local ordinances or bylaws may require additional notice exceeding these minimums.

*High flood damage potential* means damage that could result from flooding that includes any danger to life or health or any significant economic loss to a structure or building and its contents.

*Highest adjacent grade* means the highest natural elevation of the ground surface prior to

construction next to the proposed walls of a structure.

*Historic structure* means any structure that meets one of the following criteria:

(1) The structure is listed individually in the National Register of Historic Places or the Secretary of the Interior has preliminarily determined that it meets the requirements for individual listing on the National Register.
(2) The structure has been certified as contributing, or the Secretary of the Interior has preliminarily determined that the structure contributes, to the historical significance of a registered historic district or a district preliminarily determined by the Secretary to qualify as a registered historic district.
(3) The structure is individually listed on a state inventory of historic places in states with historic preservation programs that have been approved by the Secretary of the Interior.
(4) The structure is individually listed on a local inventory of historic places in communities with historic preservation programs that have been certified either by an approved state program, as determined by the Secretary of the Interior, or by the Secretary of the Interior in states without approved programs.

*Increase in regional flood height* means a calculated upward rise in the regional flood elevation greater than 0.00 foot, based on a comparison of existing conditions and proposed conditions which is directly attributable to development in the floodplain but not attributable to manipulation of mathematical variables such as roughness factors, expansion and contraction coefficients and discharge.

*Land use* means any nonstructural use made of unimproved or improved real estate. (Also see *development*.)

*Lowest adjacent grade* means elevation of the lowest ground surface that touches any of the exterior walls of a building.

*Lowest floor* means the lowest floor of the lowest enclosed area, including a basement. An enclosed space as provided in Section 44-1241(6)c., is not considered the building's lowest floor.

*Maintenance* means the act or process of ordinary upkeep and repairs, including redecorating, refinishing, nonstructural repairs, or the replacement of existing fixtures, systems, or equipment with equivalent fixtures, systems, or structures.

*Manufactured home* means a structure transportable in one or more sections, which is built on a permanent chassis and is designed to be used with or without a permanent foundation when connected to required utilities. The term "manufactured home" includes a mobile home but does not include a "mobile recreational vehicle."

*Mobile/manufactured home park or subdivision* means a parcel or contiguous parcels of land divided into two or more manufactured home lots for rent or sale.

*Mobile/manufactured home park or subdivision, existing* means a parcel of land divided into

two or more manufactured home lots for rent or sale, on which the construction of facilities for servicing the lots is completed before the effective date of the ordinance from which this article is derived. This includes, but is not limited to, the installation of utilities, the construction of streets, and either final site grading or the pouring of concrete pads.

*Mobile/manufactured home park, expansion to existing* means the preparation of additional sites by the construction of facilities for servicing the lots on which the manufactured homes are to be affixed. This includes installation of utilities, construction of streets, and either final site grading or the pouring of concrete pads.

*Mobile recreational vehicle* means a vehicle which is built on a single chassis, 400 square feet or smaller when measured at the largest horizontal projection; designed to be self-propelled, carried, or permanently towable by a licensed, light-duty vehicle; licensed for highway use if registration is required; and designed primarily for use as temporary living quarters for recreational, camping, travel, or seasonal use, and not as a permanent dwelling. Manufactured homes that are towed or carried onto a parcel of land but do not remain capable of being towed or carried, including park model homes, do not fall within the definition of "mobile recreational vehicles."

*Model, corrected effective* means a hydraulic engineering model that corrects any errors that occur in the Duplicate Effective Model, adds any additional cross sections to the Duplicate Effective Model, or incorporates more detailed topographic information than that used in the current effective model.

*Model, duplicate effective* means a copy of the hydraulic analysis used in the effective FIS and referred to as the effective model.

*Model, effective* means the hydraulic engineering model that was used to produce the current effective Flood Insurance Study.

*Model, existing (pre-project)* means a modification of the Duplicate Effective Model or Corrected Effective Model to reflect any humanmade modifications that have occurred within the floodplain since the date of the effective model but prior to the construction of the project for which the revision is being requested. If no modification has occurred since the date of the effective model, then this model would be identical to the Corrected Effective Model or Duplicate Effective Model.

*Model, revised (post-project)* means a modification of the Existing or Pre-Project Conditions Model, Duplicate Effective Model, or Corrected Effective Model to reflect revised or post-project conditions.

*Moderate wave action area (MoWA)* means a special flood hazard area subject to the potential for breaking wave heights of greater than or equal to one and one-half (1.5) feet, but less than three (3) feet, where the primary source of flooding is astronomical tides, storm surges, seiches, and/or tsunamis. A MoWA is an area within zone AE on a FIRM that is between the inland limit of zone VE and a Limit of Moderate Wave Action, where identified. (Also known as "coastal A zone.")

*National Geodetic Vertical Datum* or *NGVD* means elevations referenced to mean sea level datum, 1929 adjustment.

*New construction* means structures for which the start of construction commenced on or after the effective date of a floodplain zoning regulation adopted by this community and includes any subsequent improvements to such structures.

*Non-flood disaster* means a fire or an ice storm, tornado, windstorm, mudslide or other destructive act of nature, but excludes a flood.

*Nonconforming structure* means an existing lawful structure or building which is not in conformity with the dimensional or structural requirements of this article for the area of the floodplain it occupies. For example, an existing residential structure in the floodfringe district is a conforming use. However, if the lowest floor is lower than the flood protection elevation, the structure is nonconforming.

*Nonconforming use* means an existing lawful use or accessory use of a structure or building which is not in conformity with the provisions of this article for the area of the floodplain which it occupies, such as a residence in the floodway.

*North American Vertical Datum* or *NAVD* means elevations referenced to mean sea level datum, 1988 adjustment.

*Obstruction to flow* means any development which blocks the conveyance of floodwaters such that the development alone or together with any future development will cause an increase in regional flood height.

*Official floodplain zoning map* means that map, adopted and made part of this article, as described in Section 44-1075, which has been approved by the Department and FEMA.

*Open space use* means those uses having a relatively low flood damage potential and not involving structures.

*Ordinary highwater mark* means the point on the bank or shore up to which the presence and action of surface water is so continuous as to leave a distinctive mark such as by erosion, destruction, or prevention of terrestrial vegetation, predominance of aquatic vegetation, or other easily recognized characteristic.

*Person* means an individual or group of individuals, corporation, partnership, association,

municipality, or state agency.

*Primary frontal dune* means a continuous or nearly continuous mound or ridge of sand with relatively steep seaward and landward slopes immediately landward and adjacent to the beach and subject to erosion and overtopping from high tides and waves during major coastal storms. The inland limit of the primary frontal dune occurs at the point where there is a distinct change from a relatively steep slope to a relatively mild slope.

*Private sewage system* means a sewage treatment and disposal system serving one structure with a septic tank and soil absorption field located on the same parcel as the structure. It also means an alternative sewage system approved by the Department of Safety and Professional Services, including a substitute for the septic tank or soil absorption field, a holding tank, a system serving more than one structure, or a system located on a different parcel than the structure.

*Public utilities* means those utilities using underground or overhead transmission lines such as electric, telephone, and telegraph, and distribution and collection systems such as water, sanitary sewer, and storm sewer.

*Ready for highway use* means a mobile recreational vehicle that is on its wheels or jacking system, is attached to a site only by quick-disconnect utilities and security devices, and has no permanently attached additions.

*Reasonably safe from flooding* means base flood waters will not inundate the land or damage structures to be removed from the floodplain and that any subsurface waters related to the base flood will not damage existing or proposed buildings.

*Regional flood* means a flood determined to be representative of large floods known to have occurred in Wisconsin. A regional flood is a flood with a one (1) percent chance of being equaled or exceeded in any given year, and if depicted on the FIRM, the regional flood elevation (RFE) is equivalent to the base flood elevation (BFE).

*Sand dunes* means naturally occurring accumulations of sand in ridges or mounds landward of the beach.

*Start of construction* means the date the building permit was issued, provided the actual start of construction, repair, reconstruction, rehabilitation, addition, placement, or other improvement was within 180 days of the permit date. The actual start means either the first placement of permanent construction on a site, such as the pouring of slab or footings, the installation of piles, the construction of columns, or any work beyond initial excavation, or the placement of a manufactured home on a foundation. Permanent construction does not include land preparation, such as clearing, grading, and filling, nor does it include: the installation of streets and/or walkways; the excavation for a basement, footings, piers, or foundations or the erection of temporary forms; the installation on the property of accessory buildings, such as garages or sheds not occupied as dwelling units nor part of the main structure. For an alteration, the actual start of construction means the first alteration of any wall, ceiling, floor, or other

structural part of a building, whether or not that alteration affects the external dimensions of the building.

*Structure* means any manmade object with form, shape, and utility, either permanently or temporarily attached to, placed upon, or set into the ground, stream bed, or lakebed, including, but not limited to, roofed and walled buildings, gas or liquid storage tanks, bridges, dams, and culverts.

*Subdivision* means has the meaning given in Wis. Stats. § 236.02(12).

*Substantial damage* means damage of any origin sustained by a structure, whereby the cost of restoring the structure to its pre-damaged condition would equal or exceed 50 percent of the equalized assessed value of the structure before the damage occurred.

*Substantial improvement* means any repair, reconstruction, rehabilitation, addition, or improvement of a building or structure, the cost of which equals or exceeds 50 percent of the equalized assessed value of the structure before the improvement or repair is started. If the structure has sustained substantial damage, any repairs are considered substantial improvement regardless of the work performed. The term does not include any alteration of a historic structure, provided that the alteration will not preclude the structure's continued designation as a historic structure, nor any project for the improvement of a building required to correct existing health, sanitary, or safety code violations identified by the Director of the Department of Community and Economic Development and which improvements are the minimum necessary to assure safe living conditions.

*Unnecessary hardship* means special conditions affecting a particular property which were not self-created and have made strict conformity with restrictions governing areas, setbacks, frontage, height, or density unnecessarily burdensome or unreasonable in light of the purposes of this article.

*Variance* means an authorization by the Board of Appeals for the construction or maintenance of a building or structure in a manner which is inconsistent with dimensional standards (not uses) contained in this article.

*Violation* means the failure of a structure or other development to be fully compliant with this article. A structure or other development without required permits, lowest floor elevation documentation, floodproofing certificates, or required floodway encroachment calculations is presumed to be in violation until such time as that documentation is provided.

*Watershed* means the entire region contributing runoff or surface water to a watercourse or body of water.

*Water surface profile* means a graphical representation showing the elevation of the water surface of a watercourse for each position along a reach of river or stream at a certain flood flow. A water surface profile of the regional flood is used in regulating floodplain areas.

*Well* means an excavation opening in the ground made by digging, boring, drilling, driving, or other methods to obtain groundwater regardless of its intended use.

*Zoning Administrator* means the appointed Zoning Administrator or their designee.

**Sections 44-1046 to 44-1073. Reserved.**

**DIVISION 2. GENERAL PROVISIONS**

**44-1074. Areas to be regulated.** This Article regulates all areas of special flood hazard identified as zones A, AO, AH, A1-30, AE, VE, V1-30, or V on the Flood Insurance Rate Map. Additional areas identified on maps approved by the DNR and the City may also be regulated under the provisions of this article, where applicable.

**44-1075. Official maps and revisions.** Special Flood Hazard Areas (SFHA) are designated as zones A, A1-30, AE, AH, AO, VE, V1-30 or V on the Flood Insurance Rate Maps (FIRMs) based on flood hazard analyses summarized in the Flood Insurance Study (FIS) listed in subsection (1) below. Additional flood hazard areas subject to regulation under this article are identified on maps based on studies approved by the DNR and listed in subsection (2) below. These maps and revisions are on file in the office of the Zoning Administrator for the City of Green Bay.

(1) *Official maps based on the Flood Insurance Study (FIS).*

a. Flood Insurance Rate Map (FIRM), City of Green Bay, Wisconsin

| Panel number | Dated |
|---|---|
| 55009C0168G | 5/9/2023 |
| 55009C0161F | 8/18/2009 |
| 55009C0162F | 8/18/2009 |
| 55009C0166G | 5/9/2023 |
| 55009C0187G | 5/9/2023 |
| 55009C0188G | 5/9/2023 |
| 55009C0189G | 5/9/2023 |
| 55009C0191G | 5/9/2023 |
| 55009C0192F | 8/18/2009 |
| 55009C0194F | 8/18/2009 |
| 55009C0215F | 8/18/2009 |
| 55009C0232F | 8/18/2009 |
| 55009C0251F | 8/18/2009 |
| 55009C0252F | 8/18/2009 |
| 55009C0256G | 5/9/2023 |
| 55009C0257G | 5/9/2023 |
| 55009C0277F | 8/18/2009 |
| 55009C0281F | 8/18/2009 |
| 55009C0282F | 8/18/2009 |
| 55009C0193G | 5/9/2023 |
| 55009C0163F | 8/18/2009 |

| | |
|---|---|
| 55009C0142G | 3/17/2014 |
| 55009C0144G | 3/17/2014 |
| 55009C0164F | 8/18/2009 |
| 55009C0276G | 5/9/2023 |
| 55009C0169G | 5/9/2023 |
| 55009C0167G | 5/9/2023 |
| 55009C0183G | 5/9/2023 |
| 55009C0186G | 5/9/2023 |
| 55009C0184G | 5/9/2023 |

b. Flood Insurance Study (FIS) volumes 55009CV001C, 55009CV002C, 55009CV003C, and 55009CV004C for the City of Green Bay, Brown County WI dated 05/23/2023 Flood Insurance Study (FIS)

c. *Letter of Map Revision*. The following are Letter of Map Revisions Based on Fill (LOMR-F) on file with the Community & Economic Development Department:

| Case Number | Tax Parcel | Date Approved |
|---|---|---|
| 22-05-1062A | 21-1083 | 2/9/2022 |
| 22-05-0940A | 18-781 | 1/24/2022 |
| 21-05-3855C | 22-55-1 | 11/16/2021 |
| 21-05-1276A | 21-947 | 2/10/2021 |
| 20-05-1747A | 15-168-A | 3/6/2020 |
| 19-05-2212A | 22-58 | 4/3/2019 |
| 18-05-2755A | 22-1231 | 4/5/2018 |
| 17-05-4875A | 23-260-2 | 7/12/2017 |
| 15-05-4265A | 21-1159 | 7/8/2015 |

Approved by: The DNR and FEMA

(2) *Official maps based on other studies*. Any official maps adopted pursuant to this article shall be approved by the DNR prior to adoption and must be more restrictive than those based on the FIS at the site of the proposed development.

**Sections 44-1076 to 44-1103. Reserved.**

**DIVISION 3. ESTABLISHMENT OF FLOODPLAIN ZONING DISTRICTS**

**44-1104. Districts defined.** The flood hazard areas regulated by this article are divided into districts as follows.

(1) The Floodway District (FW) consists of the channel of a river or stream and those portions of the floodplain adjoining the channel required to carry the regional

floodwaters, within AE Zones as shown on the FIRM, or within A Zones shown on the FIRM when determined according to Section 44-1224.

(2) The Floodfringe District (FF) consists of that portion of a riverine special flood hazard area outside the floodway within AE Zones on the FIRM, or, when floodway limits have been determined according to Section 44-1224, within A Zones shown on the FIRM.

(3) The General Floodplain District (GFP) consists of those riverine areas that may be covered by floodwater during the regional flood in which a floodway boundary has not been delineated on the FIRM and also includes shallow flooding areas identified as AH and AO zones on the FIRM.

(4) The Coastal Floodplain District (CFP) is an area of special flood hazard extending from offshore to the inland limit of a primary frontal dune along an open coast, and any other area subject to high velocity wave action from storms, including areas identified as zone V, V1-30, or VE on the FIRM. Where a riverine AE floodway extends into the CFP district, development within the floodway must comply with the regulations for both the FW and CFP districts. Where a riverine A zone or AE zone with no floodway determination abuts the CFP district, the riverine study's floodway limit must be determined based on standard floodway expansion principles within the CFP district and development within the floodway must comply with the standards for both the FW and CFP districts.

**44-1105. Locating floodplain boundaries.** Discrepancies between the exterior boundaries of zones A1-30, AE, AH, or A on the official floodplain zoning map and actual field conditions may be resolved using the criteria in this subsection. If a significant difference exists, the map shall be amended according to this article. The Zoning Administrator can rely on a boundary derived from a profile elevation to grant or deny a land use permit, whether or not a map amendment is required. The Zoning Administrator shall be responsible for documenting actual pre-development field conditions and the basis upon which the district boundary was determined. Disputes between the Zoning Administrator and an applicant over the district boundary line shall be settled according to Section 44-1281 and the criteria in this subsection**.** Where the flood profiles are based on established base flood elevations from a FIRM, FEMA must approve any map amendment or revision pursuant to Division 11 of this article.

(1) If flood profiles exist, the map scale and profile elevations shall determine the district boundary. The regional or base flood elevations shall govern if there are any discrepancies.

(2) Where flood profiles do not exist for projects, including any boundary of zone A, AO, V1-30, VE or V, the location of the boundary shall be determined by the map scale.

**44-1106. Removal of lands from floodplain.**

(a) Compliance with the provisions of this article shall not be grounds for removing land from the floodplain unless it is filled at least two (2) feet above the regional or base flood

elevation, the fill is contiguous to land outside the floodplain, and the map is amended pursuant to this article.

(b) The delineation of any of the Floodplain Districts may be revised by the City where natural or human-made changes have occurred and/or where more detailed studies have been conducted. Prior to any such change, approval must be obtained from the DNR and FEMA. A completed Letter of Map Revision is a record of this approval. The floodplain administrator shall not sign a community acknowledgement form unless all of the following criteria are met.

(1) The land and/or land around the structure must be filled at least two (2) feet above the regional or base flood elevation.

(2) The fill must be contiguous to land outside the floodplain.

(3) The applicant shall obtain a floodplain development permit before applying for a LOMR or LOMR-F.

(c) Removal of lands from the floodplain may also occur by operation of Wis. Stats. § 87.30(1)(e) if a property owner has obtained a letter of map amendment from FEMA under 44 C.F.R. 70.

**44-1107. Compliance.**

(a) No structure or use within the areas regulated by this article shall hereafter be located, erected, constructed, reconstructed, repaired, extended, converted, enlarged, or altered without full compliance with the terms of these regulations and all other regulations applicable to uses within the jurisdiction of these regulations.

(b) Failure to obtain a floodplain development permit shall be a violation of these regulations and shall be punishable in accordance with Division 12.

(c) Floodplain development permits issued on the basis of plans and applications approved by the Floodplain Administrator authorize only the use and arrangement set forth in such approved plans and applications, or amendments thereto if approved by the Floodplain Administrator. Use, arrangement, or construction contrary to that authorized shall be deemed a violation of these regulations and punishable in accordance with Division 12.

**44-1108. Municipalities and state agencies regulated.** Unless specifically exempted by law, all cities, villages, towns, and counties are required to comply with this article and obtain all necessary permits. State agencies are required to comply if Wis. Stats. § 13.48(13) applies. The construction, reconstruction, maintenance, and repair of state highways and bridges by the Wisconsin Department of Transportation is exempt when Wis. Stats. § 30.2022 applies. Although exempt from local zoning permitting requirements and fees, DOT must provide sufficient project documentation and analysis to ensure that the City remains in compliance with federal, state, and local floodplain standards.

**44-1109. Abrogation and greater restrictions.**

(a) The ordinance from which this article is derived supersedes all provisions of any municipal zoning ordinance enacted under Wis. Stat. § 62.23 which relate to floodplains. A more restrictive provision shall continue in full force and effect to the extent of the greater restrictions, but not otherwise.

(b) The ordinance from which this article is derived is not intended to repeal, abrogate, or impair any existing deed restrictions, covenants, or easements. If this article imposes greater restrictions, the provisions of this article shall prevail.

**44-1110. Interpretation.** In their interpretation and application, the provisions of this article are the minimum requirements liberally construed in favor of the City and are not a limitation on or repeal of any other powers granted by the Wisconsin Statutes. If a provision of this article required by Wis. Admin. Code NR ch. 116 is unclear, the provision shall be interpreted in light of the standards in effect on the date of the adoption of the ordinance from which this article is derived or in effect on the date of the most recent text amendment to this article.

**44-1111. Warning and disclaimer of liability.** The flood protection standards in this article are based on engineering experience and research. Larger floods may occur, or flood height may be increased by man-made or natural causes. This Article does not imply or guarantee that non-floodplain areas or permitted floodplain uses will be free from flooding and flood damages. This Article does not create liability on the part of, or a cause of action against, the municipality or any officer or employee thereof for any flood damage that may result from reliance on this article.

**44-1112. Severability.** Should any portion of this article be declared unconstitutional or invalid by a court of competent jurisdiction, the remainder of this article shall not be affected.

**44-1113. Annexed areas.** The Brown County floodplain zoning provisions in effect on the date of annexation shall remain in effect and shall be enforced by the City for all annexed areas until the City adopts and enforces an ordinance which meets the requirements of Wis. Admin. Code NR ch. 116 and 44 CFR 59-72, National Flood Insurance Program (NFIP). These annexed lands are described on the City's official zoning map. County floodplain zoning provisions are incorporated by reference for the purpose of administering this section and are on file in the office of the Zoning Administrator. All plats or maps of annexation shall show the regional flood elevation and the floodway location.

**Sections 44-1114 to 44-1132. Reserved.**

## DIVISION 4. GENERAL STANDARDS APPLICABLE TO ALL FLOODPLAIN DISTRICTS

**44-1133. General development standards.** The community shall review all permit applications to determine whether proposed building sites will be reasonably safe from flooding and assure that all necessary permits have been received from those governmental agencies whose approval is required by federal or state law.

(1) If a proposed building site is in a flood-prone area, all new construction and substantial improvements shall be all of the following.

a. Designed and anchored to prevent flotation, collapse, or lateral movement of the structure resulting from hydrodynamic and hydrostatic loads, including the effects of buoyancy.

b. Constructed with flood-resistant materials.

c. Constructed by methods and practices that minimize flood damages.

d. Constructed with electrical, heating, ventilation, plumbing, and air conditioning equipment and other service facilities that are designed and/or located so as to prevent water from entering or accumulating within the components during conditions of flooding.

(2) All subdivision proposals, including for manufactured home parks, shall include regional flood elevation and floodway data for any development that meets the subdivision definition of this article and all other land use permit requirements in Section 44-1279(b). If a subdivision or other proposed new development is in a flood-prone area, the community shall assure that:

a. Such proposed subdivision or other proposed new development is consistent with the need to minimize flood damage within the flood-prone area;

b. Public utilities and facilities such as sewer, gas, electrical, and water systems are located and constructed to minimize or eliminate flood damage; and

c. Adequate drainage is provided to reduce exposure to flood hazards.

**44-1134. Hydraulic and hydrologic analyses.**

(a) No floodplain development shall:

(1) Obstruct flow, defined as development which blocks the conveyance of floodwaters by itself or with other development, causing any increase in the regional flood height; or

(2) Cause any increase in the regional flood height due to floodplain storage area lost.

(b) The Zoning Administrator shall deny permits if it is determined the proposed development will obstruct flow or cause any increase in the regional flood height, based on the officially adopted FIRM or other adopted map, unless the provisions of Division 11 of this article are met.

**44-1135. Watercourse alterations.**

(a) No land use permit to alter or relocate a watercourse in a mapped floodplain shall be issued until the Zoning Administrator has notified all adjacent municipalities, the Department and FEMA regional offices, in writing, and required the applicant to secure all necessary state and federal permits. The standards of Section 44-1134 must be met and the flood carrying capacity of any altered or relocated watercourse shall be maintained.

(b) As soon as is practicable, but not later than six (6) months after the date of the watercourse alteration or relocation and pursuant to Division 11 of this article, the City shall apply for a Letter of Map Revision (LOMR) from FEMA. Any such alterations must be reviewed and approved by FEMA and the DNR through the LOMC process.

**44-1136. Development under Wis. Stats. Chs. 30 and 31.** Development which requires a permit from the Department under Wis. Stats. Chs. 30 and 31, such as docks, piers, wharves, bridges, culverts, dams, and navigational aids, may be allowed if the necessary permits are obtained and amendments to this article are made according to Division 11 hereof.

**44-1137. Public or private campgrounds.** Public or private campgrounds shall have a low flood damage potential and shall satisfy all of the following requirements.

(1) The campground is approved by the Department of Agriculture, Trade and Consumer Protection.

(2) The Zoning Administrator has issued a land use permit for the campground.

(3) The character of the river system and the campground elevation are such that a 72-hour warning of an impending flood can be given to all campground occupants.

(4) There is an adequate flood warning procedure for the campground that offers the minimum notice required under this section to all persons in the campground. This procedure shall include a written agreement between the campground owner, the municipal emergency government coordinator, and the chief law enforcement official which specifies the flood elevation at which evacuation shall occur, the personnel responsible for monitoring flood elevations, the types of warning systems to be used, the procedures for notifying at-risk parties, and the methods and personnel responsible for conducting the evacuation.

(5) An agreement under subsection (4) shall be for no more than one (1) calendar year, at which time the agreement shall be reviewed and updated by the officials identified in that subsection to remain in compliance with all applicable regulations, including those of the state Department of Agriculture, Trade and Consumer Protection and all other applicable regulations.

(6) Any mobile recreational vehicle placed on the campground must satisfy one of the following requirements.

a. The vehicle is fully licensed, if required, and ready for highway use.

b. The vehicle must not occupy any site in the campground for more than 180 consecutive days, at which time the vehicle must be removed from the floodplain for a minimum of 24 hours.

c. The vehicle must meet the requirements in Divisions 5 through 8 of this article for the floodplain district in which the campground is located.

(7) All camping units that remain on site for more than thirty (30) days shall be issued a limited authorization by the campground operator, a written copy of which shall be kept on file at the campground. Such authorization shall allow placement of a camping unit consistent with subsection (6) and shall ensure compliance with all the provisions of this section.

(8) The municipality shall monitor the limited authorizations issued by the campground operator to assure compliance with the terms of this section.

(9) All camping units that remain in place for more than 180 consecutive days must meet the applicable requirements in Divisions 5 through 8 of this article for the floodplain district in which the structure is located.

(10) The campground shall have signs clearly posted at all entrances warning of the flood hazard and the procedures for evacuation when a flood warning is issued.

(11) All service facilities, including but not limited to refuse collection, electrical service, gas lines, propane tanks, sewage systems, and wells shall be properly anchored and placed at or floodproofed to the flood protection elevation.

**Sections 44-1138 to 44-1167. Reserved.**

**DIVISION 5. <u>FLOODWAY DISTRICT (FW)</u>**

**44-1168. Applicability.** This section applies to all floodway areas on the floodplain zoning maps and those identified pursuant to Section 44-1224.

**44-1169. Permitted uses.** The following open space uses are allowed in the Floodway District and the floodway areas of the General Floodplain District if they are not prohibited by any other provision of this chapter, they meet the standards in Sections 44-1170 and 44-1171, and all permits or certificates have been issued according to Section 44-1279.

(1) Agricultural uses such as farming, outdoor plant nurseries, horticulture, viticulture, and wild crop harvesting.

(2) Nonstructural industrial and commercial uses such as loading areas, parking areas, and airport landing strips.

(3) Nonstructural recreational uses such as golf courses, tennis courts, archery ranges, picnic grounds, boat ramps, swimming areas, parks, wildlife and nature preserves, game farms, fish hatcheries, shooting, trap, and skeet activities, hunting and fishing areas, and hiking and horseback riding trails, subject to the fill limitations of Section 44-1170.

(4) Uses or structures accessory to open space uses or classified as historic structures that comply with Sections 44-1170 and 44-1171.

(5) Extraction of sand, gravel, or other materials that comply with Section 44-1170(d).

(6) Functionally water-dependent uses such as docks, piers, or wharves, dams, flowage areas, culverts, navigational aids, and river crossings of transmission lines, and pipelines that comply with Wis. Stats. Chs. 30 and 31.

(7) Public utilities, streets, and bridges that comply with Section 44-1170(c).

(8) Portable latrines that are removed prior to flooding and systems associated with recreational areas and Department-approved campgrounds that meet the applicable provisions of local ordinances and Wis. Admin. Code SPS ch. 383.

(9) Public or private wells used to obtain potable water for recreational areas that meet the requirements of local ordinances and Wis. Admin. Code NR chs. NR 811 and 812.

(10) Wastewater treatment ponds or facilities permitted under Wis. Admin. Code NR § 110.15(3)(b).

(11) Sanitary sewer or water supply lines to service existing or proposed development located outside the floodway that comply with the regulations for the floodplain area occupied.

**44-1170. Standards for developments in the floodway.**

(a) *General*.

(1) Any development in the floodway shall comply with Division 4 of this article and have a low flood damage potential.

(2) Applicants shall provide an analysis calculating the effects of this proposal on the regional flood height to determine the effects of the proposal according to Sections 44-1134 and 44-1279(c). The analysis must be completed by a registered professional engineer in the state of Wisconsin.

(3) Any encroachment on the regulatory floodway is prohibited unless the data submitted pursuant to subsection (2) above demonstrates that the encroachment will cause no increase in flood elevations in flood events up to the base flood at any location or removes the encroached area from the regulatory floodway as provided in Section 44-1106.

(b) *Structures*.

(1) Structures accessory to permanent open space uses, including utility and sanitary facilities, or which are functionally dependent on a waterfront location may be allowed by permit if the structures comply with the following criteria.

a. Such structure is not designed for human habitation, does not have a high flood damage potential, and is constructed to minimize flood damage.

b. Either the lowest floor of the structure is elevated to or above the flood protection elevation or the structure otherwise meets all the following standards.

1. The lowest floor is elevated to or above the regional flood elevation and is dry floodproofed so that the structure is watertight with walls substantially impermeable to the passage of water and completely dry to the flood protection elevation without human intervention during flooding.

2. The structural components are capable of meeting all provisions of subsection (b)(3) below.

3. A registered professional engineer or architect has certified, through the use of a Federal Emergency Management Agency Floodproofing Certificate, that the design and methods of construction are in accordance with subsection (b)(3).

c. The structure is anchored to resist flotation, collapse, and lateral movement.

d. Mechanical and utility equipment are elevated to or above the flood protection elevation.

e. The structure does not obstruct the flow of flood waters or cause any increase in flood levels during the occurrence of the regional flood.

(2) In order to develop a structure designed to allow the automatic entry of floodwaters below the regional flood elevation, an applicant shall submit a plan that satisfies the requirements of this section and meets or exceeds the following standards.

a. The lowest floor is elevated to or above the regional flood elevation.

b. The structure has a minimum of two (2) openings which have a total net area of not less than one (1) square inch for every square foot of enclosed area subject to flooding.

c. The bottom of all such openings shall be no higher than one (1) foot above the lowest adjacent grade. Openings may be equipped with screens, louvers, valves, or other coverings or devices, provided that they permit the automatic entry and exit of floodwaters, otherwise must remain open.

d. The use must be limited to parking, building access, or limited storage.

(3) *Certification*. Whenever floodproofing measures are required, a registered professional engineer or architect shall certify that the following floodproofing measures will be utilized, where appropriate, and are adequate to withstand the flood depths, pressures, velocities, impact and uplift forces, and other factors associated with the regional flood.

a. Reinforcement of floors and walls to resist rupture, collapse, or lateral movement caused by water pressures or debris buildup.

b. Construction of wells, water supply systems, and waste treatment systems so as to prevent the entrance of flood waters in such systems. Said systems must comply with this Division, including the provisions of Sections 44-1171(4) and (5).

c. Subsurface drainage systems to relieve external pressures on foundation walls and basement floors.

d. Cutoff valves on sewer lines or the elimination of gravity flow basement drains.

e. Placement of utilities at or above the flood protection elevation.

(c) *Public utilities, streets, and bridges*. Public utilities, streets, and bridges may be allowed by permit if the following criteria are met.

(1) Adequate floodproofing measures are provided to the flood protection elevation.

(2) Construction meets the development standards of Section 44-1134.

(d) *Fills or deposition of materials*. Fills or deposition of materials may be allowed by permit if the following criteria are met.

(1) The requirements of Section 44-1134 are satisfied.

(2) No material is deposited in navigable waters unless a permit is issued by the Department pursuant to Wis. Stats. Ch. 30 and, if applicable, the federal government issues a permit pursuant to Section 404 of the Federal Water Pollution Control Act, Amendments of 1972, 33 U.S.C. 1344, and all other requirements have been met.

(3) The fill or other materials will be protected against erosion by riprap, vegetative cover, sheet piling, or bulkheading.

(4) The fill is not classified as a solid or hazardous material.

**44-1171. Prohibited uses.** All uses not listed as permitted uses in Section 44-1169 are prohibited, including the following uses:

(1) Habitable structures, structures with high flood damage potential, or those not associated with permanent open-space uses.

(2) Storing materials that are buoyant, flammable, explosive, or injurious to property, water quality, or human, animal, plant, fish or other aquatic life.

(3) Uses not in harmony with or detrimental to uses permitted in the adjoining districts.

(4) Any private or public sewage systems, except portable latrines that are removed prior to flooding and systems associated with recreational areas and Department-approved campgrounds that meet the applicable provisions of local ordinances and Wis. Admin. Code SPS ch. 383.

(5) Any public or private wells which are used to obtain potable water, except those for recreational areas that meet the requirements of local ordinances and Wis. Admin. Code NR chs. 811 and 812.

(6) Any solid or hazardous waste disposal sites.

(7) Any wastewater treatment ponds or facilities, except those permitted under Wis. Admin. Code NR § 110.15(3)(b).

(8) Any sanitary sewer or water supply lines, except those providing to service existing or proposed development located outside the floodway which complies with the regulations for the floodplain area occupied.

**Sections 44-1172 to 44-1190. Reserved.**

**DIVISION 6. FLOODFRINGE DISTRICT (FF)**

**44-1191. Applicability.** This section applies to all floodfringe areas shown on the floodplain zoning maps and those identified pursuant to Section 44-1224.

**44-1192. Permitted uses.** Any structure, land use, or development is allowed in the Floodfringe District if the standards in Section 44-1193 are met, the use is not prohibited by this article or any other zoning regulation, and all permits or certificates specified in Section 44-1279 have been issued.

**44-1193. Standards for development in the floodfringe.** In addition to all of the general provisions from Division 2 of this article, the following requirements shall apply to development in the floodfringe according to the use requested. Any existing structure in the floodfringe must meet the nonconforming use requirements of Division 9 of this article.

(1) *Residential uses.* Any structure, including a manufactured home, which is to be newly constructed or moved into the floodfringe shall meet or exceed the following standards. Any existing structure in the floodfringe must meet the requirements of Division 9 Nonconforming Uses;

a. All new construction, including placement of manufactured homes, and substantial improvement of residential structures, shall have the lowest floor elevated to or above the flood protection elevation on fill. The fill around the structure shall be one (1) foot or more above the regional flood elevation extending at least fifteen (15) feet beyond the limits of the structure. No area may be removed from the floodfringe district unless it can be shown to meet Section 44-1106.

b. Notwithstanding subsection a. above, a basement or crawlspace floor may be placed one (1) foot above the regional flood elevation if the basement or crawlspace is designed to make all portions of the structure below the flood protection elevation watertight with walls substantially impermeable to the passage of water and with structural components having the capability of resisting hydrostatic and hydrodynamic loads and effects of buoyancy. No floor of any kind is allowed lower than one (1) foot above the regional flood elevation.

c. Contiguous dryland access shall be provided from a structure to land outside of the floodplain, except as provided in subsection (d).

d. In developments where existing street or sewer line elevations make compliance with subsection (c) impractical, the City may permit new development and substantial improvements where roads are below the regional flood elevation, provided that at least one of the following criteria is satisfied.

1. The City has written assurance from police, fire, and emergency services that rescue and relief will be provided to the structure(s) by wheeled vehicles during a regional flood event; or

2. The City has a DNR-approved emergency evacuation plan that follows acceptable hazard mitigation planning guidelines.

(2) *Accessory structures or uses.* In addition to all of the general provisions from Division 2 of this article, new construction and substantial improvements of Accessory structures shall be constructed on fill with the lowest floor at or above the regional flood elevation.

(3) *Commercial uses*. In addition to all of the general provisions from Division 2 of this article, any commercial structure which is erected, altered, or moved into the floodfringe shall meet or exceed the standards for residential uses under subsection (1). Subject to the requirements of subsection (5), storage yards, surface parking lots, and other such uses may be placed at lower elevations if an adequate warning system exists to protect life and property.

(4) *Manufacturing and industrial uses.* In addition to all of the general provisions from Division 2 of this article, any manufacturing or industrial structure which is erected, altered, or moved into the floodfringe shall have the lowest floor elevated to or above the flood protection elevation or meet the floodproofing standards in Section 44-1283.

Subject to the requirements of subsection (5), storage yards, surface parking lots, and other such uses may be placed at lower elevations if an adequate warning system exists to protect life and property.

(5) *Storage of materials.* Materials that are buoyant, flammable, explosive, or injurious to property, water quality, or human, animal, plant, fish, or aquatic life shall be stored at or above the flood protection elevation or floodproofed in compliance with Section 44-1283. Adequate measures shall be taken to ensure that such materials will not enter the water body during flooding.

(6) *Public utilities, streets, and bridges.* All utilities, streets, and bridges shall be designed to be compatible with comprehensive floodplain development plans.

a. When failure of public utilities, streets, and bridges would endanger public health or safety, or where such facilities are deemed essential, construction or repair of such facilities shall only be permitted if they are designed to comply with Section 44-1283.

b. Minor roads or non-essential utilities may be constructed at lower elevations if they are designed to withstand flood forces to the regional flood elevation.

(7) *Sewage systems*. All sewage disposal systems shall be designed to minimize or eliminate infiltration of flood water into the system, in accordance with Section 44-1283(c), to the flood protection elevation and shall meet the provisions of all local ordinances and Wis. Admin. Code SPS ch. 383.

(8) *Wells*. All wells shall be designed to minimize or eliminate infiltration of flood waters into the system, in accordance with Section 44-1283(c), to the flood protection elevation and shall meet the provisions of Wis. Admin. Code NR chs. 811 and 812.

(9) *Solid waste disposal sites.* Disposal of solid or hazardous waste is prohibited in floodfringe areas.

(10) *Deposition of materials.* Any deposited material must meet all the provisions of this article.

(11) *Manufactured homes.*

a. Owners or operators of all manufactured home parks and subdivisions shall provide adequate surface drainage to minimize flood damage and prepare, secure approval of, and file an evacuation plan indicating vehicular access and escape routes with local emergency management authorities.

b. In existing manufactured home parks, all new homes, replacement homes on existing pads, and substantially improved homes shall satisfy the following criteria.

1. The lowest floor shall be elevated to the flood protection elevation.

2. The homes shall be anchored so they do not float, collapse, or move laterally during a flood.

c. Outside of existing manufactured home parks, including new manufactured home parks and all single units outside of existing parks, all new, replacement, and substantially improved manufactured homes shall meet the residential development standards for the floodfringe subsection (1).

(12) *Mobile recreational vehicles.* All mobile recreational vehicles must be on site for fewer than 180 consecutive days and satisfy one of the following requirements.

(a) The vehicle is fully licensed, if required, and ready for highway use.

(b) The vehicle meets the elevation and anchoring requirements in subsection (11).

**Sections 44-1194 to 44-1219. Reserved.**

**DIVISION 7. <u>GENERAL FLOODPLAIN DISTRICT (GFP)</u>**

**44-1220. Applicability.** The provisions for the General Floodplain District shall apply to development in all floodplains mapped as A, AO, AH, and in AE zones within which a floodway is not delineated on the Flood Insurance Rate Maps identified in Section 44-1075(1).

**44-1221. Floodway boundaries.** For proposed development in zone A, or in zone AE within which a floodway is not delineated on the Flood Insurance Rate Map identified in Section 44-1075(1), the boundaries of the regulatory floodway shall be determined pursuant to Section 44-1224. If the proposed development would encroach upon the regulatory floodway, the development is subject to the standards of Division 5. If the development is located entirely within the floodfringe, the development is subject to the standards of Division 6.

**44-1222. Permitted uses.** Pursuant to Section 44-1224, it shall be determined whether the proposed use is located within the floodway or floodfringe. Those uses permitted in the Floodway (Section 44-1169) and Floodfringe (Section 44-1192) Districts are allowed within the General Floodplain District, according to the standards of Section 44-1223 provided that all permits or certificates required under Section 44-1279 have been issued.

**44-1223. Standards for development in the general floodplain district.** Division 5 applies to floodway areas, determined pursuant to Section 44-1224; Division 6 applies to floodfringe areas, determined pursuant to Section 44-1224.

(1) New construction and substantial improvement of structures in zone AO shall have the lowest floor, including basement, elevated to or above one of the following.

a. The depth, in feet, as shown on the FIRM, above the highest adjacent natural grade, plus one (1) additional foot of freeboard; or

b. If the depth is not specified on the FIRM, three (3) feet above the highest adjacent natural grade.

(2) New construction and substantial improvement of structures in zone AH shall have the lowest floor, including basement, elevated to or above the flood protection elevation.

(3) In zones AO and AH, all new construction and substantial improvement of structures shall provide adequate drainage paths to guide floodwaters around structures.

(4) All development in zones AO and AH shall meet the requirements applicable to floodfringe areas in Division 6.

**44-1224. Determining floodway and floodfringe limits.** Upon receiving an application for development within zone A or within zone AE where a floodway has not been delineated on the Flood Insurance Rate Maps, the Zoning Administrator shall require the applicant to:

(1) Submit two (2) copies of an aerial photograph or a plan which shows the proposed development with respect to the general floodplain district limits, stream channel, and existing floodplain developments, along with a legal description of the property, fill limits and elevations, building floor elevations, and flood proofing measures, as well as the flood zone as shown on the FIRM.

(2) Furnish any of the following information deemed necessary by the Department to evaluate the effects of the proposal upon flood height and flood flows, regional flood elevation, and to determine floodway boundaries.

a. A Hydrologic and Hydraulic Study as specified in Section 44-1279(c).

b. A surface view plan showing elevations or contours of the ground; pertinent structure, fill or storage elevations; size, location, and layout of all proposed and existing structures on the site; location and elevations of streets, water supply, and sanitary facilities; and soil types and other pertinent information.

c. Specifications for building construction and materials, floodproofing, filling, dredging, channel improvement, storage, water supply, and sanitary facilities.

**Sections 44-1225 to 44-1239. Reserved.**

## DIVISION 8. COASTAL FLOODPLAIN DISTRICT (CFD)

**44-1240. Applicability.** The provisions of this Division apply to all Coastal Floodplain Districts (CFD) shown on the floodplain zoning maps, including zones V, V1-30, and VE. Where a floodway shown on the floodplain zoning maps, a floodway determined as explained in Section

44-1104(4), or a regulatory floodway identified pursuant to Section 44-1224 extends into a Coastal Floodplain District, development shall comply with the standards of Division 5.

**44-1241. Standards for development in the coastal floodplain district.** Development in the CFD shall meet the requirements of Division 4, as well as all of the following requirements.

(1) New construction shall be located landward of the Ordinary High Water Mark.

(2) Bulkheads, seawalls, revetments, and other erosion control measures shall not be connected to the foundation or superstructure of a building and shall be designed and constructed so as not to direct floodwaters or increase flood forces or erosion impacts on the foundation or superstructure of any building.

(3) Human-made alterations of sand dunes are prohibited unless an engineering report documents that the alterations will not increase potential flood damage by reducing the wave and flow dissipation characteristics of the sand dunes.

(4) The use of fill for structural support of buildings is prohibited.

a. Non-structural fill shall be permitted only if an engineering report demonstrates that the fill will not cause runup, ramping, or deflection of floodwaters that cause damage to buildings.

(5) New construction and substantial improvement of buildings shall be elevated, consistent with Wis. Admin. Code SPS § 321.34, on pilings or columns so that the bottom of the lowest horizontal structural member of the lowest floor (excluding the pilings or columns) is elevated to or above the FPE.

a. The pile or column foundation and structure attached thereto shall be anchored to resist flotation, collapse, and lateral movement due to the effects of wind and water loads acting simultaneously on all building components. Water loading values shall be those associated with the base flood. Wind loading values shall be those defined according to American Society of Civil Engineers 7-16 *Minimum design loads and associated criteria for buildings and other structures* or other equivalent standard.

b. A registered professional engineer or architect shall develop or review the structural design, specifications, and plans for the construction and shall certify that the design and methods of construction to be used are in accordance with accepted standards of practice for meeting the provisions of Section 44-1241(5).

(6) New construction and substantial improvement of buildings shall have the space below the lowest floor either free of obstruction or constructed with non-supporting breakaway walls, open wood lattice-work, or insect screening intended to collapse without causing collapse, displacement, or other structural damage to the elevated portion of the building or supporting foundation system.

a. For the purpose of Section 44-1241(6), a breakaway wall shall have a design safe loading resistance of not less than ten (10) and not more than twenty (20) pounds per square foot.

b. Use of breakaway walls which exceed a design safe loading resistance of twenty (20) pounds per square foot, either by design or where so required by local or state codes, may be permitted only if a registered professional engineer or architect certifies that the designs proposed meet all of the following conditions.

1. Breakaway wall collapse shall result from a water load less than that which would occur during the base flood; and

2. The elevated portion of the building and supporting foundation system shall not be subject to collapse, displacement, or other structural damage due to the effects of wind and water loads acting simultaneously on all building components (structural and non-structural). Water loading values shall be those associated with the base flood. Wind loading values shall be those defined according to American Society of Civil Engineers 7-16 *Minimum design loads and associated criteria for buildings and other structures*, or equivalent standard.

c. All space enclosed by breakaway walls, open wood lattice-work, or insect screening below the lowest floor shall be used solely for parking, building access, or storage.

(7) Require within flood-prone areas:

a. New and replacement water supply systems to be designed to minimize or eliminate infiltration of flood waters into the systems; and

b. New and replacement sanitary sewage systems to be designed to minimize or eliminate infiltration of flood waters into the systems, discharges from the systems into flood waters, and onsite waste disposal systems to be located to avoid impairment to them or contamination from them during flooding.

(8) All mobile recreation vehicles must be on site for fewer than 180 consecutive days and satisfy one of the following requirements.

a. The vehicle must be fully licensed and ready for highway use.

b. The vehicle must meet the standards of Section 44-1241(1) through (9), inclusive.

(9) Manufactured homes placed or substantially improved within the Coastal Floodplain District shall meet the standards of Section 44-1241(1) through (9), inclusive.

**Section 44-1242 to 44-1249. Reserved.**

## DIVISION 9. NONCONFORMING USES

### 44-1250. General regulations.

(a) *Applicability*.

(1) The standards in this section shall apply to all uses and buildings that do not conform to the provisions contained within this article or with Wis. Stats. § 87.30, Wis. Admin. Code NR §§ 116.12 through 116.14, and 44 CFR 59-72. These standards shall apply to all modifications or additions to any nonconforming use or structure and to the use of any structure or premises which was lawful before the passage of the ordinance from which this article is derived or any amendment thereto. A party asserting the existence of a lawfully established nonconforming use or structure has the burden of proving that the use or structure was compliant with the floodplain zoning regulations in effect at the time the use or structure was created.

(2) As permit applications are received for additions, modifications, or substantial improvements to nonconforming buildings in the floodplain, the City shall develop a list of those nonconforming buildings, their present equalized assessed values, and the costs of those activities associated with changes to those buildings.

(b) The existing lawful use of a structure or its accessory use which is not in conformity with the provisions of this article may continue subject to the following conditions.

(1) No modifications or additions to a nonconforming use or structure shall be permitted unless they comply with this article. The words “modification” and “addition” include, but are not limited to, any alteration, addition, modification, structural repair, rebuilding, or replacement of any such existing use, structure, or accessory structure or use. “Modification” does not include maintenance activities, including, but not limited to, painting, decorating, paneling, and other nonstructural components and the maintenance, repair, or replacement of existing private sewage or water supply systems or connections to public utilities. Any costs associated with the repair of a damaged structure are not considered maintenance. The construction of a deck that does not exceed 200 square feet and that is adjacent to the exterior wall of a principal structure is not an extension, modification, or addition. The roof of the structure may extend over a portion of the deck in order to provide safe ingress and egress to the principal structure.

(2) If a nonconforming use or the use of a nonconforming structure is discontinued for twelve (12) consecutive months, it is no longer permitted and any future use of the property, including any structure or building thereon, shall conform to the applicable requirements of this article.

(3) The municipality shall keep a record which lists all nonconforming uses and nonconforming structures, their present equalized assessed values, the cost of all modifications or additions which have been permitted, and the percentage of each structure’s total current value those modifications represent;

(4) No modification or addition to any nonconforming structure or any structure with a nonconforming use which over the life of the structure would equal or exceed 50 percent of its present equalized assessed value shall be allowed unless the entire structure is permanently changed to a conforming structure with a conforming use in compliance with the applicable requirements of this article. Contiguous dry land access must be provided for residential and commercial uses in compliance with Section 44-1193(1). The costs of elevating the lowest floor of a nonconforming building or a building with a nonconforming use to the flood protection elevation are excluded from the 50 percent provisions of this subsection.

(5) No maintenance on a per-event basis to any nonconforming structure or any structure with a nonconforming use, the cost of which would equal or exceed 50 percent of its present equalized assessed value, shall be allowed unless the entire structure is permanently changed to a conforming structure with a conforming use in compliance with the applicable requirements of this article. Contiguous dry land access must be provided for residential and commercial uses in compliance with Section 44-1193(1). Maintenance to any nonconforming structure which does not exceed 50 percent of its present equalized assessed value on a per-event basis does not count against the cumulative calculations over the life of the structure for substantial improvement calculations.

(6) If on a per-event basis the total value of the work being done under subsections (4) and (5) equals or exceeds 50 percent of the present equalized assessed value the work shall not be permitted unless the entire structure is permanently changed to a conforming structure with a conforming use in compliance with the applicable requirements of this article. Contiguous dry land access must be provided for residential and commercial uses in compliance with Section 44-1193(1).

(7) Except as provided in subsection (8), if any nonconforming structure or any structure with a nonconforming use is destroyed or is substantially damaged, it cannot be replaced, reconstructed, or rebuilt unless the use and the structure meet the current requirements of this article. A structure is considered substantially damaged if the total cost to restore the structure to its pre-damaged condition equals or exceeds 50 percent of the structure's present equalized assessed value.

(8) For nonconforming buildings that are substantially damaged or destroyed by a nonflood disaster, the repair or reconstruction of any such nonconforming building shall be permitted in order to restore it to the size and use in effect prior to the damage event, provided that the following minimum requirements are met and all required permits have been granted prior to the start of construction.

a. *Residential Structures*. The following minimum requirements for residential structures must be met.

1. The lowest floor, including basement, shall be elevated to or above the base flood elevation using fill, pilings, columns, posts, or perimeter walls. Perimeter walls must meet the requirements of Section 44-1283(b).

2. The structure shall be anchored to prevent flotation, collapse, or lateral movement resulting from hydrodynamic and hydrostatic loads, including the effects of buoyancy, and shall be constructed with methods and materials resistant to flood damage.

3. The structure shall be constructed with electrical, heating, ventilation, plumbing, and air conditioning equipment and other service facilities that are designed and/or elevated so as to prevent water from entering or accumulating within the components during conditions of flooding.

4. In A Zones, City staff must obtain, review, and utilize any flood data available from a federal, state, or other source.

5. For residential structures in AO Zones with no elevations specified, the lowest floor, including basement, shall meet the standards in Section 44-1223.

6. In AO Zones, there shall be adequate drainage paths around structures on slopes to guide floodwaters around and away from said structures.

b. *Nonresidential Structures.* The following minimum requirements for nonresidential structures must be met.

1. The structure shall meet the requirements of Section § 44-1250(b)(8)a.

2. The structure shall either have the lowest floor, including basement, elevated to or above the regional flood elevation; or, together with attendant utility and sanitary facilities, shall meet the standards in Section 44-1283(a) or (b).

3. In AO Zones with no elevations specified, the structure shall have the lowest floor, including basement, meet the standards in Section 44-1223.

(c) A nonconforming historic structure may be altered if the alteration will not preclude the structure's continued designation as a historic structure, the alteration will comply with Section 44-1170(a), flood resistant materials are used, and construction practices and floodproofing methods that comply with Section 44-1283 are used. Repair or rehabilitation of historic structures shall be exempt from the development standards of Section 44-1250(b)(8)a. if it is determined that the proposed repair or rehabilitation will not preclude the structure's continued designation as a historic structure and constitutes the minimum alteration necessary to preserve the historic character and design of the structure.

**44-1251. Floodway District.**

(a) No modification or addition shall be allowed to any nonconforming structure or any structure with a nonconforming use in the Floodway District, unless such modification or addition meets the following criteria.

(1) The City has granted a permit or variance which meets all requirements of this article for the modification or addition.

(2) The modification or addition meets the requirements of Section 44-1250.

(3) The modification or addition shall not increase the obstruction to flood flows or regional flood height.

(4) Any addition to the existing structure shall be floodproofed pursuant to Section 44-1283, by means other than the use of fill, to the flood protection elevation.

(5) If any part of the foundation below the flood protection elevation is enclosed, the following standards shall apply.

1. The enclosed area shall be designed by a registered architect or engineer to allow for the efficient entry and exit of flood waters without human intervention. A minimum of two (2) openings must be provided with a minimum net area of at least one (1) square inch for every one (1) square foot of the enclosed area. The lowest part of the opening can be no more than twelve (12) inches above the adjacent grade.

2. The parts of the foundation located below the flood protection elevation must be constructed of flood-resistant materials.

3. Mechanical and utility equipment must be elevated or floodproofed to or above the flood protection elevation.

4. The use must be limited to parking, building access, or limited storage.

(b) No new on-site sewage disposal system or addition to an existing on-site sewage disposal system, except where an addition has been ordered by a government agency to correct a hazard to public health, shall be allowed in the Floodway District. Any replacement, repair, or maintenance of an existing on-site sewage disposal system in a floodway area shall meet the applicable requirements of this Code, including Section 44-1283(c), and Wis. Admin. Code SPS ch. 383.

(c) No new well or modification to an existing well used to obtain potable water shall be allowed in the Floodway District. Any replacement, repair, or maintenance of an existing well in the Floodway District shall meet the applicable requirements of this Code, including Section 44-1283(c), and Wis. Admin. Code NR chs. 811 and 812.

**44-1252. Floodfringe District.**

(a) No modification or addition shall be allowed to any nonconforming structure or any structure with a nonconforming use unless the City has granted a permit or variance for such modification or addition and the modification or addition meets the requirements of Section 44-1193 except where subsection (b) is applicable.

(b) Where compliance with the provisions of subsection (a) would result in unnecessary hardship and only where the structure will not be used for human habitation or be associated with a high flood damage potential, the Board of Appeals, using the procedures established in Section 44-1281, may grant a variance from those provisions of subsection (a) for modifications or additions using the criteria listed below. Modifications or additions which are protected to elevations lower than the flood protection elevation may be permitted if all of the following criteria are met.

(1) No floor is allowed below the regional flood elevation for residential or commercial structures.

(2) Human lives are not endangered.

(3) Public facilities, such as water or sewer, shall not be installed.

(4) Flood depths shall not exceed two (2) feet.

(5) Flood velocities shall not exceed two (2) feet per second.

(6) The structure shall not be used for storage of materials as described in Section 44-1193(5).

(c) All new private sewage disposal systems, or addition to, replacement, repair, or maintenance of a private sewage disposal system shall meet all the applicable provisions of this Code, including Section 44-1283(c) and Wis. Admin. Code SPS ch. 383.

(d) All new wells, or addition to, replacement, repair, or maintenance of a well shall meet the applicable provisions of this Code, including Section 44-1283(c), and Wis. Admin. Code NR chs. 811 and 812.

**44-1253. Coastal Floodplain District.**

(a) New construction and substantial improvements to structures in the Coastal Floodplain District shall meet the standards of Division 8.

(b) No structural repairs, modifications, or additions to any existing building, the cost of which exceeds, over the life of the existing building, 50 percent of its present equalized assessed value, may be allowed in a coastal floodplain area unless the entire building is permanently changed to conform with the standards prescribed in Division 8.

**Sections 44-1254 to 44-1277. Reserved.**

## DIVISION 10. ADMINISTRATION

**44-1278. Applicability.** The Zoning Administrator, Plan Commission, and Board of Appeals shall administer this article in accordance with Section 44-53 of this Code and Wis. Stats. § 62.23(7).

**44-1279. Zoning Administrator.**

(a) *Duties and powers.* The Zoning Administrator is authorized to administer this article and shall have the duties and powers listed in this section.

(1) Advise applicants of the provisions of this article, assist in preparing permit applications and appeals, and assure that the regional flood elevation for the proposed development is shown on all permit applications.

(2) Issue permits and inspect properties for compliance with provisions of this article and issue certificates of compliance where appropriate.

(3) Inspect and assess all damaged floodplain structures to determine if substantial damage to the structures has occurred.

(4) Keep records of all official actions, including, but not limited to:

a. All permits issued, inspections made, and work approved.
b. Documentation of certified lowest floor and regional flood elevations.
c. Floodproofing certificates.
d. Water surface profiles, floodplain zoning maps and regulations, and nonconforming uses and structures including changes, appeals, variances, and amendments.
e. All substantial damage assessment reports for floodplain structures.
f. List of nonconforming structures and uses.
g. In the Coastal Floodplain District, documentation of the certified elevation of the bottom of the lowest horizontal structural member of new construction and substantial improvements.
h. In the Coastal Floodplain District, certification by a licensed professional engineer or architect where required for new construction and substantial improvement under Division 8.

(5) Submit copies of the following items to the Department Regional office:

a. Within ten (10) days of the decision, a copy of any decisions on variances, appeals for map or text interpretations, and map or text amendments.

b. Copies of case-by-case analyses and other required information.

c. Copies of substantial damage assessments performed and all related correspondence concerning the assessments.

(6) Investigate, prepare reports, and report violations of this article to the Plan Commission and City Attorney for prosecution. Copies of the reports shall also be sent to the Department Regional office.

(7) Submit copies of amendments to the FEMA Regional office.

(b) *Land use permit.* A land use permit shall be obtained before any development; repair, modification, or addition to an existing structure; or change in the use of a building or structure, including sewer and water facilities, may be initiated.

(1) *Expiration.* All permits issued under the authority of this article shall expire no more than 180 days after issuance. The permit may be extended for a maximum of 180 days for good and sufficient cause. If the permitted work has not started within 180 days of the permit date, the development must comply with any regulation, including any revision to the FIRM or FIS, that took effect after the permit date.

(2) The application to the Zoning Administrator shall include the following general information:

a. Name and address of the applicant, property owner and contractor.

b. Legal description, proposed use, and whether it is new construction or a modification.

(3) *Site development plan.* A site plan drawn to scale shall be submitted with the permit application form and shall contain all of the following information.

a. The location, dimensions, area, and elevation of the lot.

b. The location of the ordinary highwater mark of any abutting navigable waterways.

c. The location of any structures with distances measured from the lot lines and street center lines.

d. The location of any existing or proposed on-site sewage systems or private water supply systems.

e. The location and elevation of existing or future access roads.

f. The location of floodplain and floodway limits as determined from the official floodplain zoning maps.

g. The elevation of the lowest floor of proposed buildings and any fill using the vertical datum from either National Geodetic Vertical Datum (NGVD) or North American Vertical Datum (NAVD).

h. Data sufficient to determine the regional flood elevation in NGVD or NAVD at the location of the development and to determine whether or not the requirements of Division 5 and/or 6 are met.

i. Data to determine if the proposed development will cause an obstruction to flow or an increase in regional flood height or discharge according to Section 44-1134. This may include any of the information noted in Section 44-1170.

j. Hydraulic and hydrologic studies as described in subsection (c), at the discretion of the Zoning Administrator.

(c) *Hydraulic and hydrologic studies to analyze development.* All hydraulic and hydrologic studies shall be completed under the direct supervision of a professional engineer registered in the State. The study contractor shall be responsible for the technical adequacy of the study. All studies shall be reviewed and approved by the Department.

(1) *Zone A floodplains and AE zones within which a floodway is not delineated.*

a. *Hydrology.* The appropriate method shall be based on the standards in Wis. Admin. Code NR ch. 116.07(3), *Hydrologic Analysis: Determination of Regional Flood Discharge.*

b. *Hydraulic modeling.* The regional flood elevation shall be based on the standards in Wis. Admin. Code NR ch. 116.07(4), *Hydraulic Analysis: Determination of Regional Flood Elevation* and on the following:

1. The required limits of the hydraulic model shall be based on detailed study information for downstream structures (dam, bridge, culvert) to determine adequate starting Water Service Elevation (WSEL) for the study.

2. Channel sections must be surveyed.

3. Minimum four-foot (4’) contour data in the overbanks shall be used for the development of cross section overbank and floodplain mapping.

4. A maximum distance of 500 feet between cross sections is allowed in developed areas with additional intermediate cross sections required at transitions in channel bottom slope, including a survey of the channel at each location.

5. The most current version of the Hydrologic Engineering Center River Analysis System (HEC-RAS) shall be used.

6. A survey of bridge and culvert openings and the top of road is required at each structure.

7. Additional cross sections are required at the downstream and upstream limits of the proposed development and any necessary intermediate locations based on the length of the reach if greater than 500 feet.

8. Standard accepted engineering practices shall be used when assigning parameters for the base model such as flow, Manning's N values, expansion and contraction coefficients, and effective flow limits. The base model shall be calibrated to past flooding data such as high water marks to determine the reasonableness of the model results. If no historical data is available, adequate justification shall be provided for any parameters outside standard accepted engineering practices.

9. The model must extend past the upstream limit of the difference in the existing and proposed flood profiles in order to provide a tie-in to existing studies. The height difference between the proposed flood profile and the existing study profiles shall be no more than 0.00 feet.

c. *Mapping.* A work map of the reach studied shall be provided, showing all cross-section locations, floodway/floodplain limits based on best available topographic data, geographic limits of the proposed development, and whether the proposed development is located in the floodway.

1. If the proposed development is located outside of the floodway, it is determined to have no impact on the regional flood elevation.

2. If any part of the proposed development is in the floodway, it must be added to the base model to show the difference between existing and proposed conditions. The study must ensure that all coefficients remain the same as in the existing model, unless adequate justification based on standard accepted engineering practices is provided.

(2) *Zone AE floodplains.*

a. *Hydrology*. If the proposed hydrology will change the existing study, the appropriate method to be used shall be based on Wis. Admin. Code NR ch. 116.07(3), *Hydrologic Analysis: Determination of Regional Flood Discharge.*

b. *Hydraulic modeling.* The regional flood elevation shall be based on the standards in Wis. Admin. Code NR ch. 116.07(4), *Hydraulic Analysis: Determination of Regional Flood Elevation* and on the following:

1. *Duplicate Effective Model*. The effective model shall be reproduced to ensure correct transference of the model data and to allow integration of the revised data to provide a continuous FIS model upstream and downstream of the revised reach. If data from the effective model is available, models shall be generated that duplicate the FIS profiles and the elevations shown in the Floodway Data Table in the FIS report to within 0.1 foot.

2. *Corrected Effective Model.* The Corrected Effective Model shall not include any human-made physical changes since the effective model date but shall import the model into the most current version of HEC-RAS for Department review.

3. *Existing (Pre-Project Conditions) Model*. The Existing Model shall be required to support conclusions about the actual impacts of the project associated with the Revised (Post-Project) Model or to establish more up-to-date models on which to base the Revised (Post-Project) Model.

4. *Revised (Post-Project Conditions) Model.* The Revised (Post-Project Conditions) Model shall incorporate the Existing Model and any proposed changes to the topography caused by the proposed development. This model shall reflect proposed conditions.

5. All changes to the Duplicate Effective Model and subsequent models must be supported by certified topographic information, bridge plans, construction plans, and survey notes.

6. Changes to the hydraulic models shall be limited to the stream reach for which the revision is being requested. Cross sections upstream and downstream of the revised reach shall be identical to those in the effective model and result in water surface elevations and topwidths computed by the revised models matching those in the effective models upstream and downstream of the revised reach as required. The Effective Model shall not be truncated.

c. *Mapping.* Maps and associated engineering data shall be submitted to the Department for review and must meet the following conditions.

1. Consistency between the revised hydraulic models, the revised floodplain and floodway delineations, the revised flood profiles, topographic work map, annotated FIRMs and/or Flood Boundary Floodway Maps (FBFMs), construction plans, and bridge plans.

2. Certified topographic map of suitable scale, contour interval, and a planimetric map showing the applicable items. If a digital version of the map is available, it may be submitted in order that the FIRM may be revised more easily.

3. Annotated FIRM panel showing the revised 1.0 percent and 0.2 percent annual chance floodplains and floodway boundaries.

4. If an annotated FIRM and/or FBFM and digital mapping data (GIS or CADD) are used, all supporting documentation or metadata must be included with the data submission along with the Universal Transverse Mercator (UTM)

projection and State Plane Coordinate System in accordance with FEMA mapping specifications.

5. The revised floodplain boundaries shall tie into the effective floodplain boundaries.

6. All cross sections from the effective model shall be labeled in accordance with the effective map and a cross section lookup table shall be included to relate to the model input numbering scheme.

7. Both the current and proposed floodways shall be shown on the map.

8. The stream centerline or profile baseline used to measure stream distances in the model shall be visible on the map.

(d) *Certificate of compliance.* No land shall be occupied or used, and no building which is hereafter constructed, altered, added to, modified, repaired, rebuilt, or replaced shall be occupied until a certificate of compliance is issued by the Zoning Administrator, except where no permit is required, subject to the following provisions.

(1) The certificate of compliance shall show that the building or premises or part thereof, and the proposed use, conform to the provisions of this article.

(2) Application for such certificate shall be concurrent with the application for a permit.

(3) If all provisions of this article are met, the certificate of compliance shall be issued within ten (10) days after written notification that the permitted work is completed.

(4) The applicant shall submit a certification signed by a registered professional engineer, architect, or land surveyor that the fill, lowest floor, and floodproofing elevations are in compliance with the permit issued. Floodproofing measures also require certification by a registered professional engineer or architect that the requirements of Section 44-1283 are met.

(5) Where applicable pursuant to Section 44-1223, the applicant must submit a certification by a registered professional engineer or surveyor of the elevation of the bottom of the lowest horizontal structural member supporting the lowest floor, excluding pilings or columns, and an indication of whether the structure contains a basement.

(6) Where applicable pursuant to Section 44-1223, the applicant must submit certifications by a registered professional engineer or architect that the structural design and methods of construction meet accepted standards of practice as required by Section 44-1223.

(e) *Other permits.* Prior to obtaining a floodplain development permit, the applicant must secure all necessary permits from federal, state, and local agencies, including but not

limited to those required by the U.S. Army Corps of Engineers under § 404 of the Federal Water Pollution Control Act, Amendments of 1972, 33 U.S.C. 1344.

**44-1280. Zoning agency.**

(a) The Green Bay Plan Commission shall:

(1) Oversee the functions of the office of the Zoning Administrator.

(2) Review and advise the Common Council on all proposed amendments to this article, maps, and text.

(3) Publish adequate notice pursuant to Wis. Stats. Ch. 985 specifying the date, time, place, and subject of the public hearing.

(b) The Green Bay Plan Commission shall not:

(1) Grant variances to the terms of this article in place of action by the Board of Appeals.

(2) Amend the text or zoning maps in place of official action by the Common Council.

**44-1281. *Board of Appeals.*** The Board of Appeals, established under Article II, Division 4 of this Chapter and in accordance with Wis. Stats. § 62.23(7)(e), is hereby authorized or shall be appointed to act for the purposes of this article. The Board shall exercise the powers conferred by this Code and the Wisconsin Statutes. The Zoning Administrator shall not be the secretary of the Board.

(1) *Powers and duties.*

a. *Appeals*. The Board shall hear and decide appeals where it is alleged there is an error in any order, requirement, decision, or determination made by an administrative official in the enforcement or administration of this article.

b. *Boundary Disputes*. The Board shall hear and decide disputes concerning the district boundaries shown on the official floodplain zoning map.

c. *Variances*. The Board shall hear and decide, upon appeal, variances from the standards of this article.

(2) *Appeals to the Board.*

a. Appeals to the Board may be taken by any person aggrieved, or by any officer or department of the City affected by any decision of the Zoning Administrator or other administrative officer. Such appeal shall be taken within thirty (30) days, unless otherwise provided by the rules of the Board, by filing with the official whose decision is in question, and with the Board, a notice of appeal specifying the reasons for the appeal. The official whose decision is in question shall transmit to the Board all records regarding the matter appealed.

b. *Application materials*.

1. When applying for a variance, the applicant shall provide site and building plans containing sufficient detail to allow the Board to evaluate whether the criteria for granting a variance can be met.

2. When an applicant requests a variance to the minimum floodproofing standards established by Section 44-1170 or 44-1193, the applicant shall submit the plans and certifications prepared by a registered professional engineer or architect, as required by Section 44-1283, and shall also submit the following information, prepared by a qualified professional such as a surveyor, engineer, architect, or other construction professional:

   (i) The basic anticipated drainage pattern that would be expected to provide positive draining throughout the subject area.

   (ii) How surface drainage would reach storm sewers within the road right-of-way or any other available stormwater facilities.

   (iii.) Whether back yard drains or sewers would be required.

   (iv.) Design details for the side slopes of fill areas that are treated in any way other than by grading to a slope no steeper than 3:1, including, but not limited to, retaining walls and terracing.

b. *Notice and hearing for appeals including variances.*

1. *Notice.* The Board shall:

   (i) Fix a reasonable time for the hearing.
   (ii) Publish adequate notice pursuant to Wisconsin Statutes specifying the date, time, place, and subject of the hearing.
   (iii) Ensure that notice shall be mailed to the parties in interest and the Department Regional office at least ten (10) days in advance of the hearing.

2. *Hearing*. Any party may appear in person or by agent. The Board shall:

   (i) Resolve boundary disputes according to Section 44-1281(3).
   (ii) Decide variance applications according to Section 44-1281(4).
   (iii) Decide appeals of permit denials according to Section 44-1282.

c. *Decision*. The final decision regarding the appeal or variance application shall:

1. Be made within a reasonable time.

2. Be sent to the Department Regional office within ten (10) days of the decision.

3. Take the form of a written determination signed by the chairman or secretary of the Board.

4. State the specific facts which are the basis for the Board's decision.

5. Either affirm, reverse, vary, or modify the order, requirement, decision, or determination appealed, in whole or in part, dismiss the appeal for lack of jurisdiction, or grant or deny the variance application.

6. If the Board grants the appeal, the decision shall include the reasons for granting an appeal, including a description of the hardship demonstrated by the applicant in the case of a variance, which reasons must be clearly stated in the recorded minutes of the Board proceedings.

(3) *Boundary disputes.* The following procedure shall be used by the Board in hearing disputes concerning floodplain district boundaries.

a. If a floodplain district boundary is established by approximate or detailed floodplain studies, the flood elevations or profiles shall prevail in locating the boundary.

b. The person contesting the boundary location shall be given a reasonable opportunity to present arguments and technical evidence to the Board.

c. If the boundary is incorrectly mapped, the Board should inform the Plan Commission or the person contesting the boundary location to petition the Common Council for a map amendment according to Division 11.

(4) *Variance.*

a. The Board may, upon appeal, grant a variance from the standards of this article if an applicant convincingly demonstrates all of the following.

1. Literal enforcement of this article will cause unnecessary hardship.

2. The hardship is due to adoption of the floodplain ordinance from which this article is derived and from unique property conditions which are not common to adjacent lots or premises. In such case this article or the map at issue must be amended.

3. The variance is not contrary to the public interest.

4. The variance is consistent with the purpose of this article in Section 44-1043.

b. In addition to the criteria in subsection a., to determine that an applicant qualifies for a variance under FEMA regulations, the Board must find that the following criteria have been met.

1. The variance will not cause any increase in the regional flood elevation.

2. The applicant has shown good and sufficient cause for issuance of the variance.

3. Failure to grant the variance would result in exceptional hardship.

4. Granting the variance will not result in additional threats to public safety, extraordinary expense, the creation of a nuisance, fraud on or victimization of the public, or a conflict with existing local laws.

5. The variance granted is the minimum necessary, considering the flood hazard, to afford relief.

c. *Variance limitations.* The Board shall not:

1. Grant any variance that would grant, extend, or increase any use prohibited in the zoning district.

2. Grant a variance for a hardship based solely on an economic gain or loss.

3. Grant a variance for a hardship which is self-created.

4. Grant a variance that would damage the rights or property values of other persons in the area.

5. Grant any variance that would permit actions to be taken without first amending this article and/or applicable maps as required by Division 11.

6. Grant any variance that would allow any alteration of a historic structure, including its use, which would preclude its continued designation as a historic structure.

d. When the Board grants a floodplain variance, it shall notify the applicant in writing that said variance may increase risks to life and property and flood insurance premiums could increase up to $25.00 per $100.00 of coverage. A copy of the notice shall be maintained with the variance record.

**44-1282. To review appeals of permit denials.**

(a) The Board of Appeals shall review all data related to the appeal. This may include, but is not limited to:

(1) Permit application data listed in Section 44-1279(b).

(2) Floodway/floodfringe determination data described in Section 44-1224.

(3) Data listed in Section 44-1170(a)(2), where the applicant has not submitted this information to the Zoning Administrator.

(4) Other data submitted with the application or submitted to the Board with the appeal.

(b) For appeals of all denied permits, the Board shall:

(1) Follow the procedures of Section 44-1281.

(2) Consider the Plan Commission's recommendations.

(3) Either uphold the denial or grant the appeal.

(c) For appeals concerning increases in regional flood elevation, the Board shall:

(1) Uphold the denial where the Board agrees with the data showing an increase in flood elevation. Increases may only be allowed after amending the flood profile and map and all appropriate legal arrangements have been made with all adversely affected property owners in accordance with Division 11.

(2) Grant the appeal upon a determination that the data properly demonstrates that the project does not cause an increase, provided that no other reasons for denial exist.

**44-1283. Floodproofing standards.**

(a) No permit or variance shall be issued for a non-residential structure designed to be watertight below the regional flood elevation until the applicant submits a plan certified by a registered professional engineer or architect which demonstrates that the floodproofing measures will protect the structure or development to or above the flood protection elevation and submits a FEMA Floodproofing Certificate. Floodproofing is not an alternative to the development standards in Divisions 4 through 8 of this article.

(b) For a structure designed to allow the entry of floodwaters, no permit or variance shall be issued until the applicant submits a plan that either:

(1) Has been certified by a registered professional engineer or architect; or

(2) Meets or exceeds all of the following standards:

a. Contains a minimum of two (2) openings having a total net area of not less than one (1) square inch for every square foot of enclosed area subject to flooding.

b. The bottom of all openings shall be no higher than one (1) foot above grade.

c. Openings may be equipped with screens, louvers, valves, or other coverings or devices provided that they permit the automatic entry and exit of floodwaters.

(c) Floodproofing measures shall be designed, as appropriate, to do all of the following.

(1) Withstand flood pressures, depths, velocities, uplift and impact forces, and other regional flood factors.

(2) Protect structures to the flood protection elevation.

(3) Anchor structures to foundations to resist flotation and lateral movement.

(4) Minimize or eliminate infiltration of flood waters.

(5) Minimize or eliminate discharges into flood waters.

(6) Place essential utilities at or above the flood protection elevation.

(7) Comply with the following standards if any part of the foundation below the flood protection elevation is enclosed.

a. The enclosed area shall be designed by a registered architect or engineer to allow for the efficient entry and exit of flood waters without human intervention. A minimum of two (2) openings must be provided with a minimum net area of at least one (1) square inch for every one (1) square foot of the enclosed area. The lowest part of the opening can be no more than twelve (12) inches above the adjacent grade.

b. The parts of the foundation located below the flood protection elevation must be constructed of flood-resistant materials.

c. Mechanical and utility equipment must be elevated or floodproofed to or above the flood protection elevation.

d. The use must be limited to parking, building access, or limited storage.

**44-1284. Public information.**

(a) Place marks on structures to show the depth of inundation during the regional flood.

(b) All maps, engineering data, and regulations shall be available and widely distributed.

(c) Real estate transfers shall show the floodplain district in which any real property is located.

**Sections 44-1285 to 44-1311. Reserved.**

## DIVISION 11. AMENDMENTS

**44-1312. Conditions for Amendments.**

(a) Obstructions or increases may only be permitted if amendments are made to this article, the official floodplain zoning maps, floodway lines, and water surface profiles, in accordance with Section 44-1313.

(b) In AE Zones with a mapped floodway, no obstructions or increases shall be permitted unless the applicant receives a Conditional Letter of Map Revision from FEMA and amendments are made to this article, the official floodplain zoning maps, floodway lines, and water surface profiles, in accordance with Section 44-1313. Any such alterations must be reviewed and approved by FEMA and DNR.

(c) In A Zones, increases equal to or greater than one (1) foot may only be permitted if the applicant receives a Conditional Letter of Map Revision from FEMA and amendments are made to this article, the official floodplain maps, floodway lines, and water surface profiles, in accordance with Section 44-1313.

**44-1313. Change of floodplain zoning district boundaries.** The Common Council shall change or supplement the floodplain zoning district boundaries and this article in the manner outlined in Section 44-1314. Actions which require an amendment to this article and the submission of a Letter of Map Change (LOMC) include, but are not limited to, the following.

(1) Any fill or floodway encroachment that obstructs flow causing any increase in the regional flood height.

(2) Any change to the floodplain boundaries and/or watercourse alterations on the FIRM.

(3) Any changes to any other officially adopted floodplain maps listed in Section 44-1074(2).

(4) Any floodplain fill which raises the elevation of the filled area to a height at or above the flood protection elevation and is contiguous to land lying outside the floodplain.

(5) Correction of discrepancies between the water surface profiles and floodplain maps.

(6) Any upgrade to the text of this article required by Wis. Admin. Code NR § 116.05 or otherwise required by law, or for changes by the City.

(7) All channel relocations and changes to the maps to alter floodway lines or to remove an area from the floodway or the floodfringe that is based on a base flood elevation from a FIRM require prior approval by FEMA.

**44-1314. Procedures.** Amendments to this article may be made upon petition of any party according to the provisions of Wis. Stats. § 62.23. The petitions shall include all data required by Sections 44-1224 and 44-1279(b). No land use permit shall be issued until a Letter of Map Revision is issued by FEMA for the proposed changes.

(1) The proposed amendment shall be referred to the Plan Commission for a public hearing and recommendation to Common Council. The amendment and notice of public hearing shall be submitted to the Department Regional office for review prior to the hearing. The amendment procedure shall comply with the provisions of Wis. Stats. § 62.23.

(2) No amendments shall become effective until reviewed and approved by the Department.

(3) All persons petitioning for a map amendment that obstructs flow causing any increase in the regional flood height shall obtain flooding easements or other appropriate legal arrangements from all adversely affected property owners and notify local units of government before the amendment can be approved by the Common Council.

**Sections 44-1315 to 44-1341. Reserved.**

**DIVISION 12. ENFORCEMENT AND PENALTIES**

**44-1342. Violation and penalty.** Any violation of the provisions of this article by any person shall be unlawful and shall be referred to the City Attorney who shall expeditiously prosecute all such violators. A violator shall, upon conviction, forfeit to the municipality a penalty of not more than $50.00 (fifty dollars), together with a taxable cost of such action. Each day of continued violation shall constitute a separate offense. Every violation of this article is a public nuisance and the creation may be enjoined and the maintenance may be abated by action at suit of the City, the state, or any citizen thereof pursuant to Wis. Stats. § 87.30.

**Sections 44-1343 to 44-1368. Reserved.**

**SECTION 2.** All ordinances or parts of ordinances in conflict herewith are hereby repealed.

**SECTION 3.** Effective date. This ordinance shall take effect on and after its passage and publication.

Dated at Green Bay, Wisconsin, this _____ day of _____, 2023.

APPROVED:

_____
Mayor

ATTEST:

_____
Clerk

law

03/07/2023

Report to the
# Redevelopment Authority of the City of Green Bay

| MEETING DATE | PREPARED BY |
| --- | --- |
| March 21, 2023 | Krista Cisneroz, Staff |

## AGENDA ITEM # K.1

To approve and recommend to the Common Council the City of Green Bay's 2023 Annual Action Plan for Community Development Block Grant Program (CDBG) and HOME Investment Partnerships Program (HOME) entitlement programs.

## BACKGROUND

The City of Green Bay is an entitlement jurisdiction that receives federal funds from the U.S. Department of Housing and Urban Development (HUD) to invest in the City of Green Bay. The funds are provided under the Community Development Block Grant Program (CDBG) and HOME Investment Partnerships Program (HOME) entitlement programs.

These programs provide funds for municipalities and other units of government around the country to develop viable urban communities. This is accomplished by providing affordable, decent housing, a suitable living environment and expanding economic opportunities principally for low and moderate income persons. Each local unit of government develops its own programs and funding priorities through a five-year Consolidated Plan required by the U.S. Department of Housing and Urban Development (HUD).

Public input was received through public hearings and the objectives and outcomes identified in this plan are the results of needs identified by the public, local organizations, and government departments.

The 2023 Annual Action Plan is attached and identifies how the CDBG and HOME Entitlement Allocations will be spent on activities that support the Five-Year (2020-2024) Consolidated Plan goals.

## RECOMMENDATION

Approve and recommend to the Common Council the City of Green Bay's 2023 Annual Action Plan for Community Development Block Grant Program (CDBG) and HOME Investment Partnerships Program (HOME) entitlement programs.

## FISCAL IMPACT

## ATTACHMENTS

1. 2023 RDA Funding Draft

## 2023 Community Development Block Grant Allocations

| Potential Projects | Staff Recommendations | Program Income | TOTAL |
|---|---|---|---|
| **Public Service Programs** | | | |
| Fair Housing Services | $30,000.00 | $0.00 | $30,000.00 |
| Community Gardens | $17,000.00 | $0.00 | $17,000.00 |
| Community Pubic Service Activities | $139,400.00 | $0.00 | $139,400.00 |
| ***Subtotal for Public Service (Max $186,400)*** | ***$186,400.00*** | ***$0.00*** | ***$186,400.00*** |
| **Home Improvement Loan Program (includes emergency rehabilition)** | $100,000.00 | $50,000.00 | $150,000.00 |
| **Infrastructure and Park Improvements in CDBG Eligible Areas** | $139,400.00 | $0.00 | $139,400.00 |
| **Beautification/Art Projects in CDBG Eligible Areas** | $25,000.00 | $0.00 | $25,000.00 |
| **Economic Development Revolving Loan** | $230,468.00 | $200,000.00 | $430,468.00 |
| *** CDBG Administration** | $232,500.00 | $0.00 | $232,500.00 |
| **TOTALS** | **$913,768.00** | **$250,000.00** | **$1,163,768.00** |

**2023 CDBG Allocation - $913,768.00**

**2023 Estimated Program Income $250,000 ($200,000.00 is restricted to Economic Revolving Loan fund)**

**Public Services-limited to a max of 15% total Entitlement + prior year PI ($329,066.00)**

*** CDBG Administration amount is limited to a maximum of 20% total Entitlement plus Program Income**

## 2023 HOME Allocations

| Potential Projects | Staff Recommendations | Program Income | TOTAL |
|---|---|---|---|
| Single Family Rehabilitation Loans | $150,000.00 | $0.00 | $150,000.00 |
| Housing Development Advancement Projects | $282,245.00 | $225,000.00 | $507,245.00 |
| Community Housing Development Organizations (CHDO) Set Aside (Min $86,500.00) | $86,500.00 | $0.00 | $86,500.00 |
| *HOME Administration | $57,600.00 | $25,000.00 | $82,600.00 |
| **TOTALS** | **$576,345.00** | **$250,000.00** | **$826,345.00** |

**2023 HOME Allocation $576,345.00**

2023 Estimated Program Income $250,000.00

* HOME Administration amount is limited to a maximum of 10% total Entitlement plus Program Income

CHDO set-aside must be a minimum of 15% ($) of total Entitlement amount; Eligible activities include:

- Acquisition and/or rehabilitation of housing
- New construction of housing

Report to the
# Redevelopment Authority of the City of Green Bay

| MEETING DATE | PREPARED BY |
| --- | --- |
| March 21, 2023 | Matt Buchanan, Staff |

## AGENDA ITEM # K.2

To terminate and replace a grant agreement with BFAM, LLC for the renovation of 317 Dousman Street.

## BACKGROUND

At the June 14, 2022 RDA meeting, the RDA approved a grant agreement with BFAM, LLC to award $240,000 of Tax Increment District Affordable Housing (TIDAH) funds toward the development of six affordable rental units at 317 Dousman Street. This funding assistance was contingent upon the City receiving a $250,000 Community Development Investment (CDI) Grant through Wisconsin Economic Development Corporation (WEDC) to further support the renovation of 317 Dousman Street. In December 2022, WEDC awarded the CDI grant to the City through a formal contract, obligating the City to ensure the renovation of 317 Dousman Street is completed as proposed by BFAM, LLC. The City's Law Department recommends the parties terminate the previous TIDAH grant agreement between RDA and BFAM, LLC and proceed with a new agreement that contemplates that change in scope due to the award of CDI funds.

## RECOMMENDATION

To terminate and replace the Grant Agreement with BFAM, LLC for the renovation of 317 Dousman Street

## FISCAL IMPACT

The new grant agreement formalizes the process for the City to provide up to $250,000 in WEDC CDI funds to BFAM, LLC. The contract between the City and WEDC restricts those funds to the renovation project at 317 Dousman Street.

## ATTACHMENTS

1. 317 Dousman TIDAH CDI Grant Agreement-BFAM 20230308
2. Exhibit A - Proposal for 317 Dousman Street
3. Exhibit B - CDI Contract - City and WEDC
4. 317 Dousman Map
5. Original TIDAH Grant Agreement BFAM LLC

GRANT AGREEMENT BETWEEN
THE REDEVELOPMENT AUTHORITY OF THE CITY OF GREEN BAY ("RDA")
THE CITY OF GREEN BAY ("City")
AND BFAM, LLC ("RECIPIENT")
FOR
317 DOUSMAN STREET

THIS AGREEMENT is made this 14th day of March, 2023 by and between the Redevelopment Authority of the City of Green Bay (hereinafter called "RDA"), the City of Green Bay, a Wisconsin municipal corporation, ("City"), and BFAM, LLC (hereinafter called "RECIPIENT"), collectively referred to as the Parties.
WHEREAS, 317 DOUSMAN STREET (hereinafter called the "Project Site"), includes a commercial building that is either owned or occupied by the RECIPIENT; and

WHEREAS, the RECIPIENT and RDA previously entered into a Grant Agreement dated June 14, 2022 ("Grant Agreement") related to the Project Site wherein Recipient desired to improve the building façade, restore the building to full occupancy with commercial tenants, Six (6) affordable residential units and assume the responsibilities outlined in the Grant Agreement; and

**WHEREAS**, the Grant Agreement provided for Tax Incremental District – Affordable Housing ("TIDAH") assistance for qualified expenditures for improvements at the Project Site; and

**WHEREAS,** the Grant Agreement specifies that TIDAH assistance shall be contingent upon the City receiving a Community Development Investment (CDI) Grant from Wisconsin Economic Development Corporation (WEDC), also to be used for qualified expenditures for improvements at the Project Site; and

**WHEREAS,** subsequent to the Grant Agreement, the WEDC awarded the City a $250,000.00 CDI Grant; and

**WHEREAS**, the Parties now desire to terminate the Grant Agreement and to enter into this Agreement to contemplate the changes in scope relating to the CDI grant to add the City as a party to the contract;

NOW, THEREFORE, in consideration of the promises and obligations herein set forth, it is mutually agreed between the RDA and RECIPIENT as follows:

I. TERMINATION. The Parties hereby by agree to terminate the Grant Agreement dated June 14, 2022.

II. PROJECT SCOPE. The Project includes interior and exterior building renovations to accommodate two (2) new commercial and Six (6) affordable residential units, as proposed in the attached proposal marked Exhibit "A" (hereinafter the "Project").

III. TIDAH GRANT AWARD.

A. The RDA shall provide RECIPIENT with a TAX INCREMENT DISTRICT AFFORDABLE HOUSING (TIDAH) grant award of up to $240,000 or $40,000 per Unit upon the RECIPIENT'S fulfillment of obligations and compliance with all policies and procedures identified in this Agreement.

B. The RDA shall award subgrant funds to the RECIPIENT in the form of reimbursement of Qualified Expenditures as referenced below under Section IV. Reimbursements will only be issued after the submission of proof of payment and compliance with all applicable local, state, and federal policies, procedures, or laws.

C. RDA will distribute said funds to RECIPIENT upon receipt of a drawdown request and necessary documentation for Qualified Expenditures. All drawdown requests for TIDAH funds must be received by 3:00 p.m. in the form required by the RDA by the 9th and/or the 24th of each month in order to guarantee timely payment.

D. The RECIPIENT may submit reimbursement requests in installments prior to Project Completion. TIDAH funds issued prior to Project Completion shall not exceed 50% of the eligible expenses paid by the RECIPIENT and shall not exceed 75% of the total grant award, or $180,000. Remaining costs shall be reimbursed only upon Project Completion and passing of final inspection by a City Inspector when inspection is required. Grant reimbursement may be reduced or rescinded if the participant is unable to verify compliance with all applicable local, state, and federal policies, procedures, or laws.

E. The RDA shall withhold payment of the final 25% of the grant award, or $60,000 until the Project is deemed complete by the City Building Inspector.

IV. COMMUNITY DEVELOPMENT INVESTMENT GRANT.

A. The Wisconsin Economic Development Corporation (WEDC) has awarded the City of Green Bay a Community Development Investment (CDI) grant in the amount of $250,000.00 to support the renovation of 317 Dousman Street. The executed CDI contract between WEDC and the City is attached hereto as Exhibit B and made a part hereof.

B. The City shall issue CDI funds to the RECIPIENT upon the Development Director's confirmation that the RECIPIENT'S actions enable the City's fulfillment of obligations and compliance with all policies and procedures identified in the CDI contract (Exhibit B).

C. The City shall issue CDI funds to the RECIPIENT in the form of reimbursement of Qualified Expenditures as referenced below under Section IV. Reimbursements will only be issued after the submission of proof of payment and compliance with all applicable local, state, and federal policies, procedures, or laws.

D. The City will distribute CDI funds to RECIPIENT upon receipt of a drawdown request and necessary documentation for Qualified Expenditures. All drawdown requests for CDI funds must be received by 3:00 p.m. in the form required by the RDA by the 9th and/or the 24th of each month in order to guarantee timely payment.

E. The RECIPIENT may submit reimbursement requests in installments prior to Project Completion. CDI funds issued prior to Project Completion shall not exceed 50% of the eligible expenses paid by the RECIPIENT and shall not exceed 75% of the total CDI grant award, or $187,500. Remaining costs shall be reimbursed only upon Project Completion and passing of final inspection by a City Inspector when inspection is required. Grant reimbursement may be reduced or rescinded if the participant is unable to verify compliance with all applicable local, state, and federal policies, procedures, or laws.

F. The City shall withhold payment of the final 25% of the grant award, or $62,500 until the Project is deemed complete by the City's Chief Building Official or their designee and the City's Community and Economic Development Director r, or their designee, has confirmed the City's obligations to WEDC have been met per the CDI Contract (Exhibit B).

V. QUALIFIED EXPENDITURES.

A. TIDAH grant funds shall only be used to reimburse the RECIPIENT for the following Qualified Expenditures:

1. Purchase of building materials and hiring of labor required to complete the specific property improvements described in Exhibit "A".
2. Any other activity specifically approved by the RDA.

B. CDI grant funds shall only be used to reimburse the RECIPIENT for the following Qualified Expenditures:

1. Costs expressly identified in Sections 3(b)(i), 3(b)(ii), and 3(b)(iii) of the CDI contract (Exhibit B).

VI. RECIPIENT OBLIGATIONS.

A. PROPOSAL CONFORMANCE. RECIPIENT shall complete the Project in conformance with the proposal submitted in conjunction with this Agreement (Exhibit "A").

B. COST SHARE. RECIPIENT is responsible for all costs required to complete the Project as proposed in Exhibit "A" which exceed the grant award for qualified expenditures as defined in Section II. RECIPIENT is responsible for contributing no less than $609,034.00 in private funds, per Section 3(b) of the CDI contract (Exhibit B).

C. PERMITS. RECIPIENT is responsible for obtaining all necessary permits and shall conduct the façade improvements in conformance with all state and local building codes, rules and regulations.

D. NON-DELINQUENCY. RECIPIENT shall not be delinquent on any current City charges, taxes, or assessments, or have defaulted on any previous City assistance.

E. RECORDS AND REPORTS. RECIPIENT will maintain and have available upon request of the City and RDA the following records in a format acceptable to the City and RDA:

1. Records which document receipt, utilization, and disbursement of funds pertinent to the assisted activity.
2. Be accessible for at least one on-site monitoring as needed to ensure contract compliance, verify performance goals, and confirm performance acceptability.
3. Records and information the City requires to comply with Section 5 and Section 6 of the CDI contract (Exhibit B)
4. The DEVELOPER shall maintain all applicable records for this Project with TIDAH Program regulations. In addition, the DEVELOPER shall make available copies of all records as may be requested by the RDA. The DEVELOPER shall furnish the RDA with such information and periodic reports as the RDA may request including, but not

limited to: all invoices, timesheets, canceled checks and other documentation supporting expenditures charged to this Agreement, project progress reports, final project reports, as well as reports detailing the number, type and income of households assisted via this project.

F. RETENTION. RECIPIENT shall retain all financial records, supporting documents, statistical records, and all other records pertinent to the Agreement for a period of four (4) years. The retention period begins on the date of the final draw of subgrant funds.

G. PROJECT COMPLETION. RECIPIENT agrees to complete the Project in accordance with RDA and CITY approved plans no later than December 31, 2023 (hereinafter "Completion Date"). The Project shall be deemed completed upon the final approval of the City's Chief Building Official or their designee. In the event RECIPIENT fails to complete the Project by the Completion Date, the RDA may at its sole discretion rescind the subgrant award and recover any and all funds previously issued to the RECIPIENT under this Agreement.

VII. CONFLICT OF INTEREST. No person who is an employee, agent, consultant, officer, elected official or appointed official of the City of Green Bay who exercises any function or responsibility in the review or approval of this undertaking or carrying out of this project, shall participate in any decision relating to this Agreement which affects his or her personal interest or have any personal or pecuniary interest, direct or indirect, in this Agreement or proceeds thereof. Further, no employee, officer or agent of the RECIPIENT shall participate in the selection, or in the award, or administration of, a contract or other matter relating to the receipt of federal funds if a conflict of interest, real or apparent, would be involved.

VIII. INDEMNIFICATION. For the purpose of use of TIDAH funds disbursed to RECIPIENT pursuant to this Agreement, RECIPIENT hereby agrees to indemnify, defend and hold harmless the RDA, its elected and appointed officials, officers, employees, agents, representatives and volunteers, and each of them, from and against any and all suits, actions, legal or administrative proceedings, claims, demands, damages, liabilities, interest, attorneys' fees, costs and expenses of whatsoever kind or nature in any manner directly or indirectly caused, occasioned, or contributed to in whole or in part or claimed to be caused, occasioned, or contributed to in whole or in part, by reason of any act, omission, fault, or negligence, whether active or passive, of RECIPIENT or of anyone acting under its direction or control or on its behalf, even if liability is also sought to be imposed on RDA, its elected and appointed officials, officers, employees, agents, representatives and volunteers. The obligation to indemnify, defend and hold harmless the RDA, its elected and appointed officials, officers, employees, agents, representatives and volunteers, and each of them, shall be applicable unless liability results from the sole negligence of the RDA, its elected and appointed officials, officers, employees, agents, representatives and volunteers.

RECIPIENT shall reimburse the RDA, its elected and appointed officials, officers, employees, agent or authorized representatives or volunteers for any and all legal expenses and costs incurred by each of them in connection therewith or in enforcing the indemnity herein provided.

In the event that RECIPIENT employs other persons, firms, corporations or entities as part of the work covered by this Agreement, it shall be RECIPIENT'S responsibility to require and confirm that each third party enters into an Indemnity Agreement in favor of the RDA,

its elected and appointed officials, officers, employees, agents, representatives and volunteers, which is identical to this Indemnity Agreement.

This indemnity provision shall survive the termination or expiration of this Agreement.

## IX. TERMINATION AND REMEDIES.

A. It is the intent of the Project to eliminate blight, generate increased tax base, and encourage business development. These goals have both tangible and intangible costs that are difficult to place a value on. Therefore, in the event the RECIPIENT fails to complete the Project by the Completion Date, the RDA may at its sole discretion rescind the subgrant award and recover any and all funds previously issued to the RECIPIENT under this Agreement.

B. Except as otherwise provided in this Agreement, in the event of any default or breach of this Agreement, the breaching party shall, upon written notice from the other party, proceed immediately to ensure or remedy such default or breach, and, in any event, within sixty (60) days after receipt of such notice unless such default or breach cannot, with reasonable diligence, be cured within this period. In this event, the breaching party shall commence action to cure within the 60-day period and diligently proceed to cure the breach. In case such action is not taken or not diligently pursued, or the default or breach is not be cured or remedied within a reasonable time, the aggrieved party may institute proceedings as may be necessary or desirable, in its opinion, to cure and remedy the breach, including, but not limited to, proceedings to compel specific performance by the party in default or breach of its obligation.

C. Completion of the Project in accordance with the terms and conditions of this Agreement is the essential and unique consideration for the obligations of the RDA. Accordingly, the RDA may, in the event of legal proceedings, seek remedies to compel the specific performance of the defaulting party as the only adequate remedy and shall not seek damages in lieu of specific performance unless specific performance is legally unavailable, in which event the RDA may seek damages as authorized.

## X. MISCELLANEOUS PROVISIONS.

A. The time for performance of any term, covenant, condition, or agreement of this Agreement shall be extended by any period of unavoidable delays. In this Agreement, "unavoidable delays" means beyond the reasonable control of the party obligated to perform the applicable term, covenant, condition, or agreement under this Agreement and shall include, without limiting the generality of the foregoing, delays, attributable to acts of God, any other party in this Agreement, strikes, labor disputes, governmental restrictions, court injunctions, riot, civil commotion, acts of public enemy and casualty.

B. The RDA and RECIPIENT shall have the right to institute such actions or proceedings as they may deem desirable for effectuating the purpose of this Agreement; provided that any delay in instituting or prosecuting any such actions or proceedings or otherwise asserting such rights, shall not operate as a waiver of such rights to, or deprive it of or limit such

rights in any way. It is the intent of this provision that a party should not be constrained, so as to avoid the risk of being deprived of or limited in the exercise of any remedy because of concepts of waiver, latches, or otherwise, to exercise such remedy at a time when it may still hope otherwise to resolve the problems involved. No waiver in fact made with respect to any specific default, shall be considered or treated as a waiver of any rights with respect to other defaults or with respect to the particular default except to the extent specifically waived in writing.

C. This Agreement shall be governed by and construed in accordance with the laws of the State of Wisconsin governing agreements made and fully performed in Wisconsin. If any provision of this Agreement, or the application thereof to any persons or circumstances shall, to any extent, be invalid or unenforceable, then the remainder of this Agreement or the application of such provision, or portion thereof, and each provision of this Agreement shall be valid and enforceable to the fullest extent permitted by law. This Agreement sets forth the entire understanding between the RDA and RECIPIENT with respect to its subject matter, there being no terms, conditions, warranties, or representatives with respect to its subject matter other than that contained herein. This Agreement shall be binding upon and shall inure to the benefit of the parties hereto, their respective successors and assigns.

D. ASSIGNMENT. RECIPIENT may not assign this Agreement or sell to a third party without the prior consent of the RDA.

E. AMENDMENTS TO AGREEMENT. This Agreement may not be changed orally, but only by agreement in writing and signed by the parties hereto.

F. THIRD PARTIES. Except as expressly provided otherwise in this Agreement, the provisions of this Agreement are for the exclusive benefit of the parties hereto and not for the benefit of any other persons, as third party beneficiaries or otherwise, and this Agreement shall not be deemed to have conferred any rights, expressed or implied, upon any other person.

G. NO PARTNERSHIP CREATED. This Agreement specifically does not create any partnership or joint venture between the parties hereto, or render any party liable for any of the debts or obligations of any other party.

H. FORMALITIES AND AUTHORITY. The parties hereto represent and warrant that they are validly existing and lawful entities with the power and authorization to execute and perform this Agreement. The headings set forth in this Agreement are for convenience and reference only, and in no way define or limit the scope of content of this Agreement or in any way affect its provisions.

I. NOTICES AND DEMANDS. A notice, demand, or other communications under this Agreement shall be sufficiently given or delivered if it is deposited in the United States mail, registered or certified mail, postage prepaid, return receipt requested, or delivered personally:

| | |
|---|---|
| TO RECIPIENT: | Garritt Bader, Manager<br>BFAM, LLC<br>300 N Van Buren St.<br>Green Bay, WI 54301 |
| TO RDA: | Neil Stechschulte, Secretary |

Redevelopment Authority of the City of Green Bay
100 North Jefferson Street, Room 608
Green Bay, WI 54301

TO CITY: City of Green Bay
Clerk's Office
100 N. Jefferson St.
Green Bay, WI 54301

or to such other address, within the United States, with respect to a party as that party may from time to time designate in writing and forward to the other as provided in this Section. A copy of any notice, demand, or other communication under this Agreement given by a party under this Agreement to any other party under this Section shall be given to each other party to this Agreement.

J. NONMERGER AND SURVIVAL. Any provision in this Agreement which has not been fully performed prior to transfer of possession shall not be deemed to have terminated, but shall, unless expressly waived in writing, survive such transfer of possession and be in force and effect until performed.

SIGNATURE PAGE TO FOLLOW

IN WITNESS WHEREOF, the parties hereto have caused this Agreement to be executed and effective as of the date first written above.

**Redevelopment Authority of the City of Green Bay**

_____
Gary J. Delveaux, Chairman

_____
Neil Stechschulte, Secretary

**ACKNOWLEDGMENT**

**State of Wisconsin**

Brown County. Personally came before me this _____ day of _____ _____, the above named Gary J. Delveaux, Chairman; Neil Stechschulte, Secretary Redevelopment Authority of the City of Green Bay

to me known to be the person ___ who executed the foregoing instrument and acknowledge the same.

Notary Public Brown County, Wis.
My commission is permanent. (If not, state expiration date:
_____ ,20 _____ .)

**THE CITY OF GREEN BAY**

By:_____
Eric Genrich, Mayor

By:_____
Celestine Jeffreys, Clerk

**ACKNOWLEDGMENT**

**State of Wisconsin**

Brown County. Personally came before me this
_____ day of _____ _____ , the above named
Eric Genrich, Mayor and Celestine Jeffreys Clerk for
The City of Green Bay

to me known to be the person ___ who executed the foregoing instrument and acknowledge the same.

Notary Public Brown County, Wis.
My commission is permanent. (If not, state expiration date:
_____ ,20 _____ .)

**RECIPIENT: BFAM, LLC**

_____

Garritt Bader

**ACKNOWLEDGMENT**

**State of Wisconsin**

Brown _____ County. Personally came before me this

_____ day of _____, the above named

Garritt Bader, BFAM, LLC

_____

to me known to be the person ___ who executed the foregoing instrument and acknowledge the same.

_____

_____

Notary Public ___Brown_____ County, Wis.

My commission is permanent. (If not, state expiration date:

_____ ,20 _____ .)

EXHIBIT A

See attached proposal for 317 Dousman Street

EXHIBIT B
CDI Contract

Community & Economic Development Department
100 North Jefferson Street • Room 608
Green Bay, Wisconsin 54301-5026
www.greenbaywi.gov

Phone 920.448.3400
Fax 920.448.3426

# TAX INCREMENT DISTRICT AFFORDABLE HOUSING (TIDAH) PROGRAM APPLICATION FORM

| | |
|---|---|
| **Name/Company:** GB Real Esate Investments, LLC | |
| **Contact Person:** Garritt R. Bader | |
| **Current Address:** 300 N. Van Buren Street | |
| **Telephone Number: ( Home)** (813) 500-0296 | **(Work)** |
| **Email:** gb@gb-re.com | |

**Type of Application: (mark all that apply)**

| | | |
|---|---|---|
| **Acquisition:** ✔ | **New Construction:** | **Rehabilitation:** ✔ |

**Type of Applicant: (mark all that apply)**

| | | | |
|---|---|---|---|
| **Non-Profit:** | **For-Profit:** ✔ | **Project Developer:** ✔ | **Project Owner:** ✔ |

| |
|---|
| **Project Location:** 317 Dousman Street, Green Bay, WI 54303 |
| **RDA/CITY owned parcel? YES or NO:** No |
| **Does applicant have formal control over the site? YES or NO:** Yes |
| **Is the project located in a Tax Incremental District or other priority location? YES or NO or UNSURE:** Not currently in a TID |

**Project Cost:**

| | |
|---|---|
| **Total Cost of Project:** $2,200,000 | **Total # Units in Project:** 6 |
| **TIDAH Funds Requested:** $240,000 ($40,000/unit) | **Rental Project or Homebuyer:** Upper-Floor Rental |

**Project Description:**

**a. Provide a narrative description of the project, including details of the existing neighborhood housing stock, its average age, and general condition:**

This is a proposed renovation of the "Bangkok Garden" building at the SEC of Broadway & Dousman Streets. Over the past thirty years, the building has deteriorated due to minimal maintenance by the current owners, and a "mothbolling" of the second floor that renders it currently uninhabitable. This project will restore the building to full occupancy by gutting the first and second floors; shoring up the roof support system; installing new HVAC, plumbing and electrical services; and signing leases with new commercial tenants for the first floor and creating six residential units on the second floor. There are no current residential units on the property, and immediately-nearby residential has also been created from renovated older buildings as well.

**b. Explain the need, intended use, and justification for TIDAH funds:**

This building is a very stately old building in the Broadway district that we should want to see preserved. But like many older buildings that haven't been maintained for decades, it's in danger of being demolished if we don't work to preserve it--and this work isn't cheap. Fully gutting this building, installing a new roof support under-structure, new windows, and tuckpointing, is far more costly than renovating a newer building. The nice thing about it, however, is being able to bring the second floor back to occupancy at rental rates that will meet TIDAH requirements. As a result, we can provide the upper-floor residential that adds character to our downtown neighborhoods, and quality new housing that's affordable for a wider range of the population.

c. Describe the population intended to be served by this project and TIDAH funds:

| |
|---|
| This project is aimed to meet the 80% threshold as required by TIDAH funds. Potential residents include service industry professionals |
| from nearby businesses; those who rely or choose to patronize public transportation; and/or those who want to be downtown but |
| can't afford upscale, luxury-designed apartments. |
| |
| |
| |

d. Describe any other formal City housing goals or other community objectives from approved City plans or policies that are addressed by this project that would make this application for TIDAH funds even more competitive:

| |
|---|
| The primary benefit of this project is bringing our second story back to life. We have too many buildings in downtown right now |
| with vacant second stories due to the cost of renovating them for residential use. This would help push this initiative ahead, |
| hopefully to other nearby buildings soon. |
| |
| |
| |

e. Households/Persons Benefited:

| | |
|---|---|
| Total # of households: Six | Total # of persons: 6-10 |

| Targeted Income Level* | RENTAL UNITS | | | | OWNER OCCUPIED | | | | STAND ALONE OR TOWNHOUSE |
|---|---|---|---|---|---|---|---|---|---|
| | Studio | 1 unit | 2 units | 3+ Units | Studio | 1 unit | 2 units | 3+ Units | |
| 0 to 30% AMI | | | | | | | | | |
| 31 to 80% AMI | | 5 | 1 | | | | | | |
| 81% + AMI | | | | | | | | | |
| TOTAL | | 5 | 1 | | | | | | |

Project Costs & Use of TIDAH funds:

a. New Construction or Rehabilitation

| | Total Budget | TIDAH Funding | TIDAH % | 20% Match |
|---|---|---|---|---|
| Rehabilitation of existing units | | | | |
| Renovation of non-residential structures into residential units | 2,200,000 | 240,000 | 10.9% | |
| New construction of residential units | | | | |
| Other: (Detailed explanation must be attached) | Please see attached | | | |
| Other: (Detailed explanation must be attached) | | | | |

b. Acquisition

| | Total Budget | TIDAH Funding | TIDAH % | 20% Match |
|---|---|---|---|---|
| Land | 450,000 | | | |
| Buildings | 1,544,585 | 240,000 | 15.5% | |
| Other Expenses: | 118,000 | | | |
| (Detailed explanation must be attached) | | | | |

c. Site/Off-site Improvements

| | Total Budget | TIDAH Funding | TIDAH % | 20% Match |
|---|---|---|---|---|
| Clearance/demolition | | | | |
| Drainage improvements | | | | |
| Installation/renovation of sanitary sewers | | | | |
| Remediation | | | | |
| Transportation improvements (on-site) | | | | |
| Transportation improvements (off-site) | | | | |
| Other: (Detailed explanation must be attached) | Please see attached | | | |
| Other: (Detailed explanation must be attached) | | | | |

d. Total Cost and Total Home Funding

| | Total Budget | TIDAH Funding | TIDAH % | 20% Match |
|---|---|---|---|---|
| TOTALS | $2,200,000 | 240,000 | 10.9% | |
| Percentage of TIDAH Financing Project | 10.9% | | | |
| Total number of units | Six | | | |
| Total number of TIDAH units | Six | | | |
| Other: (Detailed explanation must be attached) | Please see attached budget, rent roll and proforma | | | |
| | | | | |
| | | | | |

Sources of Funds: Grants, Loans or Other Investors

a. Please attach commitment letters

b. Grant sources (complete as applicable)

| Funding Agency | Amount | Application to be submitted/date | Application in review by agency/date | Approved for funding/date |
|---|---|---|---|---|
| WEDC / CDI Grant | $250,000 | June 1, 2022 | ? | ? |
| Investor Equity | $355,000 | N/A | N/A | N/A |
| | | | | |
| | | | | |
| | | | | |
| | | | | |

c. Provide a list of previous affordable housing projects and project references.

**Any award of TIDAH Funds is subject to an executed agreement that shall include clawbacks or other penalties for failure to perform on the approved project.

Applicant's Certification:

The applicant certifies that all the information in this application and all information furnished in support of this application is given for the purpose of obtaining a grant under the City of Green Bay's Tax Increment District Affordable Housing Program.

5-1-22

Signature Date

Signature Date

Please initial the following:

| | |
|---|---|
| GB | The applicant acknowledges that the City may enlist third party professional consulting services to assist in the evaluation of this request for funding, for which 100% of costs may be passed on to the applicant at the City's sole discretion. |
| GB | The applicant acknowledges that application may be subject to a public records search. |

(For Office Use Only)
Date received: _____
Option awarded: _____
Payment received: _____

Equal Housing Opportunity

VISION
ARCHITECTURE, LLC
P.O. Box 224
Neenah, WI 54956
920-904-4300
www.vision-architecture.net

Proposed Renovation For:

# 240 N. Broadway

Green Bay, Wisconsin

Issue Date: 10/3/2022

Revisions:

A2.0

# COMMUNITY DEVELOPMENT INVESTMENT GRANT AGREEMENT
# BETWEEN
# THE WISCONSIN ECONOMIC DEVELOPMENT CORPORATION
# AND
# CITY OF GREEN BAY

This Agreement is entered into pursuant to Chapter 238 of the Wisconsin Statutes between the Wisconsin Economic Development Corporation ("WEDC"), a public body corporate and politic authorized to grant funds for the purpose of economic development pursuant to Chapter 238 of the Wisconsin Statutes, and City of Green Bay ("Recipient"). Certain capitalized terms are defined in Section 1 of the Agreement.

## WITNESSETH

**WHEREAS**, the Recipient has submitted an Application to WEDC, requesting funds from WEDC's Community Development Investment Grant Program ("CDI Funds");

**WHEREAS**, WEDC has determined that the Recipient is an eligible recipient of CDI Funds; and

**WHEREAS**, in reliance upon the Application, WEDC has approved the Recipient for up to Two Hundred Fifty Thousand Dollars ($250,000) in CDI Funds.

**NOW, THEREFORE**, for valid consideration, the receipt of which is hereby acknowledged, and in consideration for the promises and covenants in this Agreement, WEDC and the Recipient agree as follows:

**1. Definitions.** For purposes of this Agreement, the following terms shall have the following meanings:

(a) "Agreement" means this agreement, to include all documents required to be delivered contemporaneously with the execution and delivery of this Agreement, and the attached Exhibits, together with any future amendments executed in compliance with Section 21 of this Agreement.

(b) "Application" means the materials submitted by the Recipient to WEDC relating to this allocation of CDI Funds.

(c) "CDI Funds" means the grant monies the Recipient is eligible to receive from WEDC's Community Development Investment grant program in accordance with this Agreement.

(d) "Effective Date" means the date on which this Agreement is fully executed by both parties.

(e) “Eligible Project Costs” means costs for which CDI Funds and Matching Funds may be used, as outlined in Section 3(b) of this Agreement, which the Recipient incurs between the Project Start Date and Project End Date.

(f) “Ineligible Costs” means costs for which CDI Funds and Matching Funds may not be used, means costs incurred prior to the Project Start Date; costs for acquisition; costs related to grant applications or bid preparation; costs which may be covered by other grant or statutory programs; permits; Phase I and II environmental studies; Lien claims of the Department of Natural Resources and Environmental Protection Agency; performance and payment bonds; contingencies; developer fees; insurance premiums; supplies and the purchase of moveable equipment; signage (unless required by federal, state or local law including applicable building and/or fire code(s) and advertising; financing fees, interest payments, or the assumption of debt; relocation fees; accounting, legal, appraisal, and architectural fees; mergers and acquisitions; project administration fees, including costs associated with WEDC compliance reporting, schedules of expenditures, and payment requests.

(g) “Leverage” means all funding provided for the Project other than CDI Funds, including Matching Funds.

(h) “Matching Funds” means non-WEDC funds secured by the Recipient to meet the match requirement of CDI Funds under this Agreement. Eligible Matching Funds must be incurred between the Project Start Date and Project End Date. In order to receive the full amount of CDI Funds contemplated under this Agreement, Matching Funds must be at least Seven Hundred Fifty Thousand Dollars ($750,000). No more than Fifty Percent (50%) of the Matching Funds may consist of other state and/or federal grants. Matching Funds must be cash and may not be in-kind.

(i) “Program Guidelines” means the WEDC approved rules and eligibility requirements for the Community Development Investment grant program in force as of the Effective Date.

(j) “Project” means the Recipient assisting in the renovation of the Bangkok Garden building, in accordance with the Application and the terms of this Agreement.

(k) “Project End Date” means December 31, 2023, the date by which the Project will be complete and the last day which the Recipient may incur costs against CDI Funds and Matching Funds.

(l) “Project Location” means the site or sites at which the Project will take place, specifically 317 Dousman Street, Green Bay, Wisconsin.

(m) “Project Start Date” means October 20, 2022, the date on which the Project begins and the Recipient may start incurring costs against CDI Funds and Matching Funds.

(n) “Recipient” means City of Green Bay.

(o) “WEDC” means the Wisconsin Economic Development Corporation, together with its successors and assigns.

**2. CDI Funds.** Subject to the terms and conditions set forth in this Agreement, Program Guidelines, and in Wisconsin law, WEDC shall provide to the Recipient a grant of up to Two Hundred Fifty Thousand Dollars ($250,000) in CDI Funds.

**3. Recipient's Obligations.** The Recipient will or will ensure that:

(a) The Project is completed as it is contemplated in the Application and in accordance with the terms of this Agreement.

(b) CDI Funds and Matching Funds are used for Eligible Project Costs, incurred between the Project Start Date and Project End Date, as outlined in the following budget:

| USES | | SOURCES | | | TOTAL |
|---|---|---|---|---|---|
| **Budget Code** | **Eligible Project Costs** | **CDI Funds** | **Public Funds** | **Private Funds** | |
| 0190 | Demolition/Site Clearance | $0 | $0 | $193,832 | $193,832 |
| 0385 | Renovation | $250,000 | $240,000 | $415,202 | $905,202 |
| **TOTAL** | | **$250,000** | **$240,000** | **$609,034** | **$1,099,034** |

(i) Eligible Project Costs to be applied to CDI Funds for renovation include specifically renovation of existing structure including roof repairs, installation of new HVAC, and updates to plumbing and electrical services.

(ii) Eligible Project Costs to be applied to Matching Funds for renovation include specifically renovation of existing structure including roof repairs, installation of new HVAC, and updates to plumbing and electrical services.

(iii) Eligible Project Costs to be applied to Matching Funds for demolition/site clearance include specifically demolition to prepare for renovations and site clearance.

(c) CDI Funds or Matching Funds are not used for Ineligible Costs.

(d) Matching Funds from non-WEDC sources are secured sufficient to achieve the match requirement of the CDI Funds under this Agreement. Matching Funds must equal at least Seven Hundred Fifty Thousand Dollars ($750,000) in order for the Recipient to obtain the maximum amount of the CDI Funds, and must be documented prior to the final reimbursement.

(e) WEDC's participation in the Project is acknowledged in any signage at the Project Location and any planning and feasibility documents related to the Project.

(f) Reports are provided to WEDC as further described in Section 5 of this Agreement, in such form as required by WEDC.

**4. Release of Funds.** WEDC will release the CDI Funds contemplated by this Agreement to the Recipient on a disbursement basis. The Recipient may request CDI Funds in up to Three (3) disbursements and each disbursement will be contingent on the following:

(a) The Recipient submitting to WEDC a request for payment of funds in such form as required by WEDC, a sample of which is attached to this Agreement as Exhibit A.

(b) Recipient creating a Bill.com account unless Recipient has an existing account with Bill.com. Instructions for creating a Bill.com account will be provided by WEDC under separate cover. Recipient shall provide their Payment Network ID to WEDC with each request for payment.

(c) The Recipient submitting to WEDC a summary report of the Eligible Project Costs incurred against both the CDI Funds and Matching Funds. The amount of Matching Funds incurred for any request must be in an amount pro rata with the amount incurred against the CDI Funds being requested.

(d) The Recipient submitting to WEDC documentation evidencing that the Eligible Project Costs incurred at the Project Location against both the CDI Funds and the Matching Funds covered by the request have been purchased or will be purchased through an invoice, receipt, registration form, or other third-party documentation that contains the following information:

(i) Vendor name and contact information;
(ii) Description of the item(s) purchased;
(iii) Cost of purchase;
(iv) Date of purchase (invoice date or date received, not date ordered unless it is the same); and
(v) Project Location.

(e) The Recipient being in compliance with this Agreement, and with any other agreements by and between the Recipient and WEDC.

(f) The Recipient requesting all CDI Funds no later than February 29, 2024.

**5. Reporting.** The Recipient shall provide reports and information to WEDC according to the following requirements:

(a) Performance reports, due according to the Schedule of Reporting set forth in Section 5(b) below, in such form as required by WEDC. The report shall include information required by WEDC to determine Project performance which shall include, at a minimum, a financial overview and narrative summary on the progress of the Project to date, Project expenditures, and the Recipient's progress on achieving the goals related to the following Project-specific metrics:

| Metric | Goal* |
|---|---|
| Taxable Property Value | $1,430,000 |
| Capital Investment | $1,549,034 |
| Leverage – Total | $1,412,034 |

***These goals represent anticipated Project outcomes and failure to achieve these goals will not constitute an Event of Default, unless they are noted as a requirement elsewhere in the Agreement.

(b) Schedule of Reporting:

| PERIOD COVERED | DOCUMENTATION | DUE DATE |
|---|---|---|
| See Section 6 Below | Schedule of Expenditures | See Section 6 Below |
| October 20, 2022- December 31, 2023 | Performance Report | March 1, 2024 |

(c) Within Thirty (30) days, notify WEDC in writing of any event or occurrence that may adversely impact the completion of the Project as represented in the Application. Adverse impacts include, but are not limited to, lawsuits, regulatory intervention, and inadequate capital to complete the Project.

**6. Schedule of Expenditures.** Consistent with Wis. Stat. § 238.03(3)(a), the Recipient must submit to WEDC, within 120 days after the end of the Recipient's fiscal year in which any grant or loan funds were expended, a schedule of expenditures of the grant or loan funds, including expenditures of any matching cash or in–kind match, signed by the director or principal officer of the recipient to attest to the accuracy of the schedule of expenditures. The Recipient shall engage an independent certified public accountant to perform procedures, approved by WEDC and consistent with applicable professional standards of the American Institute of Certified Public Accountants, to determine whether the grant or loan funds and any matching cash or in–kind match were expended in accordance with the grant or loan contract. The Recipient must make available for inspection the documents supporting the schedule of expenditures.

**7. Event of Default.** The occurrence of any one or more of the following events shall constitute an "Event of Default" for the purposes of this Agreement:

(a) The Recipient ceases the Project within Five (5) years of the Effective Date of this Agreement and commences substantially the same economic activity outside of Wisconsin.

(b) The Recipient supplies false or misleading information to WEDC in connection with this Agreement, without providing a satisfactory explanation, in WEDC's sole discretion, for the false or misleading information.

(c) The Recipient fails to comply with or perform, in any material respect, any of its obligations under this Agreement, without providing a satisfactory explanation, in WEDC's sole discretion, for the noncompliance.

(d) The Recipient is in default under any other agreement between WEDC and the Recipient.

**8. Remedies in Event of Default.**

(a) Upon the occurrence of any Event of Default, WEDC shall send a written notice of default to the Recipient, setting forth with reasonable specificity the nature of the default. If the Recipient fails to cure any such Event of Default to the reasonable satisfaction of WEDC within Thirty (30) calendar days, WEDC may extend the cure period if WEDC determines, in its sole

discretion, that the Recipient has begun to cure the Event of Default and diligently pursues such cure, or, without further written notice to the Recipient, declare the Recipient in default. The cure period shall in no event be extended more than Ninety (90) days. In the Event of Default, WEDC shall terminate the Agreement and recover from the Recipient:

(i) One Hundred Percent (100%) of the funds disbursed to the Recipient under this Agreement;

(ii) All court costs and attorneys' fees incurred by WEDC in terminating this Agreement and recovering the amounts owed by the Recipient under this provision; and

(iii) A financial penalty of up to One Percent (1%) of the CDI Funds.

(b) These amounts shall be paid to WEDC within Thirty (30) calendar days of demand by WEDC hereunder. If the Recipient fails to pay these amounts to WEDC as and when due, the Recipient will be liable for the full unpaid balance plus interest at the annual rate of up to Twelve Percent (12%) from the date of the notice of Event of Default.

(c) Upon an Event of Default, WEDC shall, without further notice, withhold remaining disbursements of the CDI Funds.

**9. Recipient's Warranties and Representations.** In addition to the other provisions of this Agreement, the Recipient hereby warrants and represents to the best of its knowledge that as of the Effective Date and as long as Recipient has obligations under of this Agreement:

(a) The Recipient is in compliance with all laws, regulations, ordinances and orders of public authorities applicable to it, the violation of which would have a material adverse effect on the Recipient's ability to perform its obligations under this Agreement or to otherwise engage in its business.

(b) The Recipient is not in default under the terms of any loan, lease or financing agreements with any creditor where such default would have a material adverse effect on the Recipient's ability to fulfill its obligations under this Agreement.

(c) The financial statements and other information provided by the Recipient to WEDC are complete and accurate in accordance in all material respects with Generally Accepted Accounting Principles where applicable and have been relied on by WEDC in deciding whether to enter into this Agreement with the Recipient.

(d) There are no actions, suits or proceedings, whether litigation, arbitration, or administrative, pending or threatened against or affecting the Recipient or the Project which, if adversely determined, would individually or in the aggregate materially impair the ability of the Recipient to perform any of its obligations under this Agreement or adversely affect the financial condition or the assets of the Recipient.

(e) The Recipient is unaware of any conditions which could subject it to any damages, penalties or clean-up costs under any federal or state environmental laws which would have a material adverse effect on the Recipient's ability to comply with this Agreement.

(f) The Recipient has, or will acquire before commencing any work for which they are required, all necessary permits, licenses, certificates or other approval, governmental or otherwise, necessary to operate its business and own and operate its assets, all of which are in full force and effect and not subject to proceedings to revoke, suspend, forfeit or modify.

(g) The Recipient has filed when due all federal and state income and other tax returns required to be filed by the Recipient and has paid all taxes shown thereon to be due. The Recipient has no knowledge of any uncompleted audit of the returns or assessment of additional taxes thereon.

(h) The Recipient and the undersigned officer thereof has all necessary or requisite power and authority to execute and deliver this Agreement.

(i) The execution and delivery by the Recipient of this Agreement has been duly authorized by all necessary action of the Recipient and no other proceedings on the part of the Recipient are necessary to authorize this Agreement or to consummate the transactions contemplated hereby.

(j) The Recipient has available or has the capacity to secure funds necessary to cover, as and when incurred, the costs and expenditures necessary for the completion of the Project, as identified in the Application and this Agreement.

(k) The Recipient is not making these representations and warranties specifically based upon information furnished by WEDC.

(l) These warranties and representations herein are true and accurate as of the Effective Date of this Agreement, and shall survive the execution thereof.

(m) The information disclosed to WEDC in the course of WEDC's evaluation of the Recipient's eligibility for the Program does not contain any untrue statement of a material fact or omit to state a material fact necessary in order to make the statements contained therein, taken as a whole and in light of the circumstances under which they were made, not misleading.

**10. Wisconsin Public Records Law.** The Recipient understands that this Agreement and other materials submitted to WEDC may constitute public records subject to disclosure under Wisconsin's Public Records Law, Wis. Stats. §§ 19.31-.39, and any successor statutes and regulations.

**11. Additional Requirements.**

(a) Project Records and Financial Records. The Recipient shall prepare, keep and maintain such records as may be reasonably required by WEDC to validate the Recipient's performance under this Agreement, whether held by the Recipient or by a third-party conducting Project-related activities on behalf of the Recipient, and the performance reports provided to WEDC. All of the Recipient's financial records shall be complete and accurate, and prepared, kept, and maintained in accordance with Generally Accepted Accounting Principles. The Recipient shall provide such records to WEDC during the term of this Agreement as may be requested by WEDC. Such materials shall be retained by the Recipient for a period of at least Three (3) years after March 1, 2024.

(b) Inspection.

(i) WEDC and its respective agents, shall, upon Forty-Eight (48) hours advance written notice to the Recipient, have the right to enter the Recipient's premises, during normal business hours, to inspect the Recipient's operations documentation relating to this Agreement, provided, however, that such access does not unreasonably disrupt the normal operations of the Recipient.

(ii) The Recipient shall produce for inspection, examination, auditing and copying, upon reasonable advance notice, any and all records which relate to this Agreement, whether held by the Recipient or by a third-party conducting Project-related activities on behalf of the Recipient.

(iii) WEDC reserves the right to conduct physical site visits of the Project during the term of this Agreement.

(c) Authorization to Receive Confidential Information. The Recipient hereby authorizes WEDC to request and receive confidential information that the Recipient has submitted to, including any adjustments to such information by, the Wisconsin Department of Revenue ("DOR") and the Wisconsin Department of Workforce Development ("DWD"), and to use such information solely for the purposes of assessing the Recipient's performance for the duration of the Project and ensuring that WEDC is properly administering or evaluating economic development programs. With regard to the information contained in the DWD unemployment insurance files, WEDC may access the following for the Eight (8) most recent quarters: the quarterly gross wages paid to the Recipient's employees; the monthly employee count; and the Recipient's FEIN, NAICS code, and legal and trade names. The Recipient also authorizes WEDC to share information submitted to WEDC by the Recipient with the DOR and DWD and to redisclose to the public the information received from the DOR and DWD used to evaluate the Recipient's performance under their specific economic development program and the impact of WEDC economic development programs. Records exempted from the public records law by Wis. Stat. § 19.36(1) will be handled by WEDC in accordance with that law.

(d) Consolidation or Merger. During the term of this Agreement, the Recipient shall provide written notice to WEDC within Thirty (30) days of any consolidation or merger with or into any other unrelated corporation or business entity.

(e) Public Announcement. The Recipient agrees to cooperate with WEDC in making a public announcement of this Agreement.

(f) Insurance. The Recipient covenants that it will maintain insurance in such amounts and against such liabilities and hazards as customarily is maintained by other companies operating similar businesses.

(g) Online Portal and Document Delivery. Recipient agrees to respond timely to any invitation sent by WEDC to create an online account for use with WEDC's online customer portal ("Portal"). Upon opening the account, Recipient hereby agrees to use the Portal to submit any required performance reports, schedule of expenditures and supporting documentation, unless WEDC directs otherwise. Recipient further agrees to identify appropriate assigned users, duly

authorized by Recipient, to serve as contacts, to execute necessary documents, and to support specific tasks Recipient must complete in the Portal. WEDC may, in its sole discretion, rely on any document, performance report, schedule of expenditures, financial statement, tax return, agreement or other communication ("Document") physically delivered to WEDC by mail, hand delivery, delivery service, email, facsimile, the Portal or other electronic means which WEDC in good faith believes was sent by Recipient or any representatives or employees of Recipient. WEDC may treat any Document as genuine and authorized to the same extent as if it was an original document validly executed or authenticated as genuine by Recipient. WEDC may from time to time in its sole discretion reject any such Document and require a signed original or require Recipient to provide acceptable authentication of any such Document before accepting or relying on the same. Recipient understands and acknowledges that there is a risk that Documents sent by electronic means may be viewed or received by unauthorized persons and Recipient agrees by sending Documents by electronic means that Recipient shall be deemed to have accepted this risk and the consequences of any such unauthorized disclosure. Recipient also agrees to create an account with Bill.com and provide a Payment Network ID in order to receive any payments from WEDC. Recipient accepts any risk associated with creating an account with Bill.com and releases WEDC from any liability related thereto.

**12. Conflicts.** In the event of any conflict between the provisions of this Agreement and any accompanying documents, the terms of this Agreement control.

**13. Choice of Law. THIS AGREEMENT AND ALL MATTERS RELATING TO IT OR ARISING FROM IT – WHETHER SOUNDING IN CONTRACT LAW OR OTHERWISE – SHALL BE GOVERNED BY, AND SHALL BE CONSTRUED AND ENFORCED PURSUANT TO, THE LAWS OF THE STATE OF WISCONSIN.**

**14. Venue, Jurisdiction.** Any judicial action relating to the construction, interpretation, or enforcement of this Agreement, or the recovery of any principal, accrued interest, court costs, attorneys' fees and other amounts owed hereunder, shall be brought and venued in the U.S. District Court for the Western District of Wisconsin or the Dane County Circuit Court in Madison, Wisconsin. **EACH PARTY HEREBY CONSENTS AND AGREES TO JURISDICTION IN THOSE WISCONSIN COURTS, AND WAIVES ANY DEFENSES OR OBJECTIONS THAT IT MAY HAVE ON PERSONAL JURISDICTION, IMPROPER VENUE OR FORUM NON CONVENIENS.**

**15. Waiver of Right to Jury Trial. EACH PARTY WAIVES ITS RIGHT TO A JURY TRIAL IN CONNECTION WITH ANY JUDICIAL ACTION OR PROCEEDING THAT MAY ARISE BY AND BETWEEN WEDC AND THE RECIPIENT CONCERNING OR RELATING TO THE CONSTRUCTION, INTERPRETATION OR ENFORCEMENT OF THIS AGREEMENT, OR THE RECOVERY OF ANY PRINCIPAL, ACCRUED INTEREST, COURT COSTS, ATTORNEYS' FEES AND OTHER AMOUNTS THAT MAY BE OWED BY THE RECIPIENT HEREUNDER. THIS JURY TRIAL WAIVER CONSTITUTES A SUBSTANTIAL CONSIDERATION FOR AND INDUCEMENT TO THE PARTIES TO ENTER INTO THIS AGREEMENT.**

**16. Limitation of Liability. RECIPIENT HEREBY WAIVES ANY RIGHT IT MAY HAVE TO CLAIM OR RECOVER FROM WEDC ANY SPECIAL, EXEMPLARY, PUNITIVE, CONSEQUENTIAL, OR DAMAGES OF ANY OTHER NATURE OTHER THAN ACTUAL DAMAGES INCURRED OR SUFFERED BY RECIPIENT.**

**17. Severability.** If any provision of this Agreement is held invalid or unenforceable by any Governmental Body of competent jurisdiction, such invalidity or unenforceability shall not invalidate the entire Agreement. Instead, this Agreement shall be construed as if it did not contain the particular provision or provisions held to be invalid or unenforceable, and an equitable adjustment shall be made and necessary provisions added so as to give effect to the intention of the parties as expressed in this Agreement at the time of the execution of this Agreement and of any amendments to this Agreement. In furtherance of and not in limitation of the foregoing, the parties expressly stipulate that this Agreement shall be construed in a manner that renders its provisions valid and enforceable to the maximum extent (not exceeding its express terms) possible under applicable law. "Governmental Body" means any federal, state, local, municipal, foreign or other government; courts, arbitration commission, governmental or quasi-governmental authority of any nature; or an official of any of the foregoing.

**18. WEDC is Not a Joint Venturer or Partner.** WEDC shall not, under any circumstances, be considered or represented to be a partner or joint venturer of the Recipient or any beneficiary thereof.

**19. Captions.** The captions in this Agreement are for convenience of reference only and shall not define or limit any of the terms and conditions set forth herein.

**20. No Waiver.** No failure or delay on the part of WEDC in exercising any power or right under this Agreement shall operate as a waiver, nor shall any single or partial exercise of any such power or right preclude any other exercise of any other power or right.

**21. Entire Agreement.** This Agreement embodies the entire agreement of the parties concerning WEDC's and the Recipient's obligations related to the subject of this Agreement. This Agreement may not be amended, modified or altered except in writing signed by the Recipient and WEDC. This Agreement supersedes all prior agreements and understandings between the parties related to the subject matter of this agreement.

*[Signature Page Follows]*

**IN WITNESS WHEREOF,** WEDC and the Recipient have executed and delivered this Agreement effective the date set forth next to WEDC's signature below.

**WISCONSIN ECONOMIC DEVELOPMENT CORPORATION**

By: _____ 12/22/2022
Melissa L. Hughes, Date
Secretary and CEO

**CITY OF GREEN BAY**

By: _____ 12/21/22
Eric Genrich, Date
Mayor

Notices to the Recipient hereunder shall be in writing and shall be deemed to have been given: (i) at the time it is sent, as recorded by the WEDC's system, when sent by electronic mail during a business day or, if sent after the close of normal business hours on a business day or sent on a non-business day, at the start of normal business hours on the next business day or (ii) Three (3) Business Days after deposit in the United States mail, certified and with proper postage prepaid, addressed as follows:

City of Green Bay
100 N. Jefferson Street
Green Bay, WI 54301
Attn: Joanne Bungert
Email: joanne.bungert@greenbaywi.gov

Notices to WEDC hereunder shall be in writing and shall be deemed to have been given: (i) at the time it is sent, as recorded by Recipient's system, when sent by electronic mail during a business day or, if sent after the close of normal business hours on a business day or sent on a non-business day, at the start of normal business hours on the next business day or (ii) Three (3) Business Days after deposit in the United States mail, certified and with proper postage prepaid, addressed as follows:

Wisconsin Economic Development Corporation
Division of Credit & Risk
P.O. Box 1687
Madison, WI 53701
Attn: Community Development Investment
Contract # CDI FY23-53386
Email: legal@wedc.org

# EXHIBIT A
# REQUEST FOR WEDC PAYMENT

| | | |
|---|---|---|
| Award Number: CDI FY23-53386 | Rep: | Recipient: City of Green Bay |
| FEIN # | Bill.com Payment Network ID (PNI): | Request Number: |
| Program: Community Development Investment | | Award Type: Grant |
| Funding Period Covered by this Request<br>From: To | | |

**PROJECT EXPENSES INCURRED/PAID DURING THIS PERIOD (see attachment)**

| Budget Code | Description Line Item | WEDC Funding This Period | + | Matching Funding This Period | = | Total This Period |
|---|---|---|---|---|---|---|
| 0190 | Demo/Site Clearance | | | | | |
| 0385 | Renovation | | | | | |
| | **TOTAL:** | | | | | |

- ○ Check here if this is the Final Request for Payment. If there is a balance remaining on the Project it may be lapsed.

**PAYMENT/PROJECT EXPENSE/MATCH DESCRIPTION** - Disbursement
Prior to the release of funds, the following requirements must be met (to be initialed by WEDC staff):

- Recipient creating a Bill.com account unless Recipient has an existing account with Bill.com. Instructions for creating a Bill.com account will be provided by WEDC under separate cover. Recipient shall provide their Payment Network ID to WEDC with each request for payment. _____

- The Recipient submitting to WEDC a summary report of the Eligible Project Costs incurred against both the CDI Funds and Matching Funds. The amount of Matching Funds incurred for any request must be in an amount pro rata with the amount incurred against the CDI Funds being requested. _____

- The Recipient submitting to WEDC documentation evidencing that the Eligible Project Costs incurred at the Project Location against both the CDI Funds and Matching Funds covered by the disbursement request have been purchased or will be purchased through an invoice, receipt, registration form, or other third-party documentation that contains the following information: Vendor name and contact information; Description of the item(s) purchased; Cost of purchase; Date of purchase (invoice date or date received, not date ordered unless it is the same). _____
  - ○ Recipient is not required to submit proof of purchase documentation (invoice, receipt, registration form, or other third-party documentation) for Matching Funds above $750,000 or CDI Funds above $250,000.

- The Recipient being in compliance with this Agreement, and with any other agreements by and between the Recipient and WEDC. _____

- The Recipient requesting all CDI Funds no later than February 29, 2024. _____

I hereby certify that the expenses reported on this form are in accordance with the terms of the Agreement and that complete and accurate records are being kept to substantiate such expenses.

_____ _____
**Authorized Recipient Signature** **Date**

| | |
|---|---|
| _____ | _____ |
| WEDC Division VP or Designee | Date |
| _____ | _____ |
| WEDC Servicing | Date |
| _____ | _____ |
| WEDC Controller or Finance Department | Date |

Retain a copy of the completed form for your records and email a copy of the original and documentation to: disbursements@wedc.org. The hard copy may be required to be sent upon request.

# 317 Dousman St

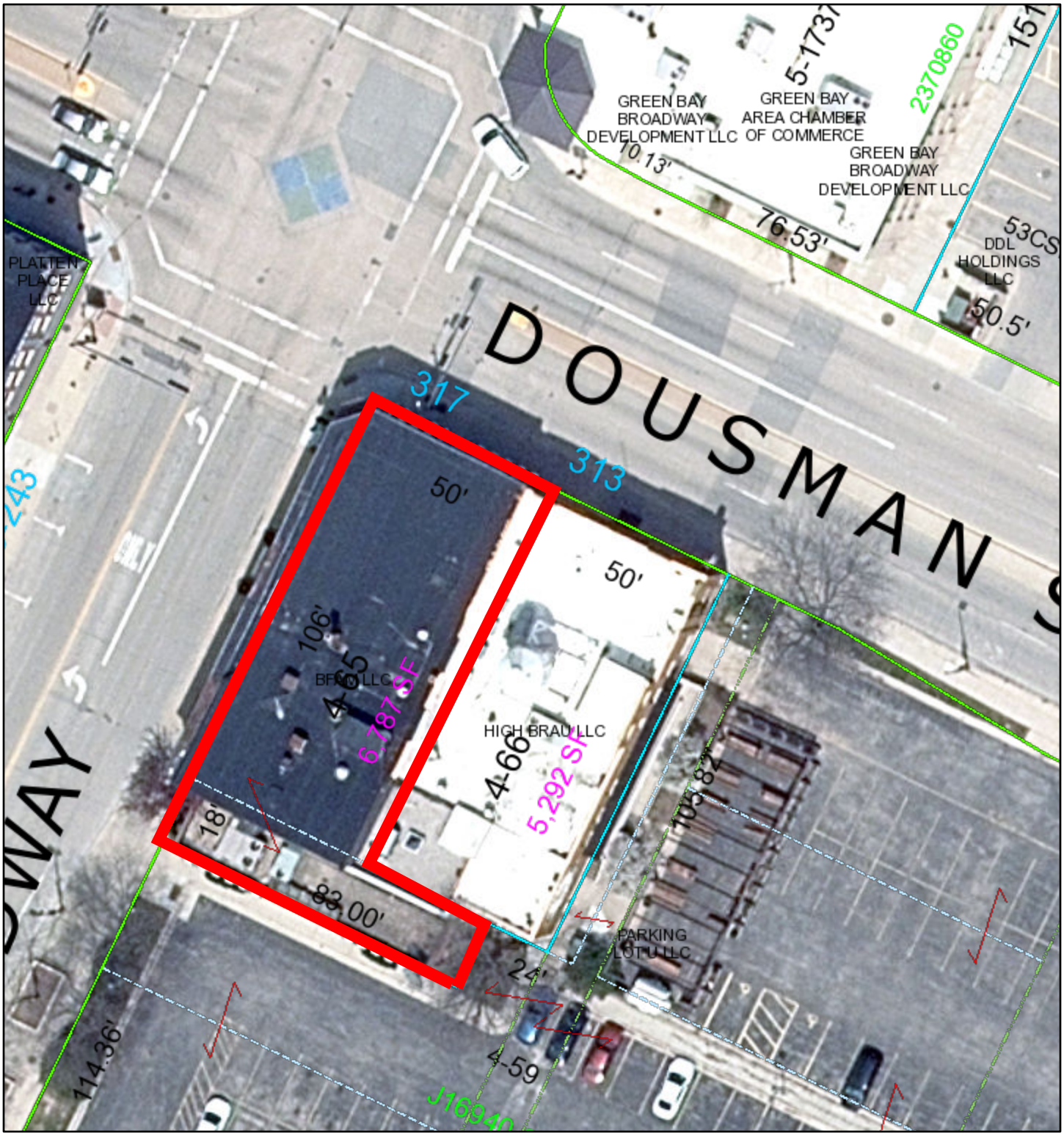


7/6/2022, 3:10:25 PM

1:600

0 0 0.01 0.01 mi

0 0.01 0.01 0.02 km

parcels

Parcel Lines

- <all other values>
- Undetermined
- Right of Way line
- Plat boundary
- Block boundary
- Lot boundary
- Parcel line
- Lines between deeds or lots (20pdashed)
- Meander line
- Hydrography
- PLSS line
- Note

Brown County, County of Brown, Esri Canada, Esri, HERE, Garmin, GeoTechnologies, Inc., USGS, EPA, USDA, Mike Hronek

Web AppBuilder for ArcGIS

Esri, FAO, NOAA | Brown County | Brown County WI | USGS | Mike Hronek |

GRANT AGREEMENT BETWEEN
THE REDEVELOPMENT AUTHORITY OF THE CITY OF GREEN BAY ("RDA")
AND BFAM, LLC ("RECIPIENT")
FOR
317 DOUSMAN STREET

THIS AGREEMENT is made by and between the Redevelopment Authority of the City of Green Bay (hereinafter called "RDA"), and BFAM, LLC (hereinafter called "RECIPIENT") on June 14, 2022;

WHEREAS, 317 DOUSMAN STREET (hereinafter called the "Project Site"), includes a commercial building that is either owned or occupied by the RECIPIENT; and

WHEREAS, the RECIPIENT desires to improve the building façade, restore the building to full occupancy with commercial tenants, Six (6) affordable residential units and assume the responsibilities outlined in this grant agreement;

NOW, THEREFORE, in consideration of the promises and obligations herein set forth, it is mutually agreed between the RDA and RECIPIENT as follows:

I. PROJECT SCOPE. The Project includes interior and exterior building renovations to accommodate two (2) new commercial and Six (6) affordable residential units, as proposed in the attached proposal marked Exhibit "A" (hereinafter the "Project").

II. TIDAH GRANT AWARD.

A. The RDA shall provide RECIPIENT with a TAX INCREMENT DISTRICT AFFORDABLE HOUSING (TIDAH) grant award of up to $240,000 or $40,000 per Unit upon the RECIPIENT'S fulfillment of obligations and compliance with all policies and procedures identified in this Agreement.

B. The RDA shall award subgrant funds to the RECIPIENT in the form of reimbursement of Qualified Expenditures as referenced below under Section III. Reimbursements will only be issued after the submission of proof of payment and compliance with all applicable local, state, and federal policies, procedures, or laws.

C. RDA will distribute said funds to RECIPIENT upon receipt of a drawdown request and necessary documentation for Qualified Expenditures. All drawdown requests for TIDAH funds must be received by 3:00 p.m. in the form required by the RDA by the 9th and/or the 24th of each month in order to guarantee timely payment.

D. The RECIPIENT may submit reimbursement requests in installments prior to Project Completion. TIDAH funds issued prior to Project Completion shall not exceed 50% of the eligible expenses paid by the RECIPIENT and shall not exceed 75% of the total grant award, or $180,000. Remaining costs shall be reimbursed only upon Project Completion and passing of final inspection by a City Inspector when inspection is required. Grant reimbursement may be reduced or rescinded if the participant is unable to verify compliance with all applicable local, state, and federal policies, procedures, or laws.

E. The RDA shall withhold payment of the final 25% of the grant award, or $60,000 until the Project is deemed complete by the City Building Inspector.

III. COMMUNITY DEVELOPMENT INVESTMENT GRANT CONTINGENCY. RDA's award of TIDAH grant funds to the RECIPIENT is contingent upon the City of Green Bay successfully securing a Community Development Investment (CDI) Grant from Wisconsin Economic Development Corporation (WEDC) in the amount of $250,000 for the redevelopment of 317 Dousman Street, as proposed by the RECIPIENT in Exhibit "A". Should the City of Green Bay fail to secure the CDI grant, this agreement between the RDA and the RECIPIENT shall be considered null and void.

IV. QUALIFIED EXPENDITURES. Grant funds shall only be used to reimburse the RECIPIENT for the following Qualified Expenditures:

A. Purchase of building materials and hiring of labor required to complete the specific property improvements described in Exhibit "A".

B. Any other activity specifically approved by the RDA.

V. RECIPIENT OBLIGATIONS.

A. PROPOSAL CONFORMANCE. RECIPIENT shall complete the Project in conformance with the proposal submitted in conjunction with this Agreement (Exhibit "A").

B. COST SHARE. RECIPIENT is responsible for all costs required to complete the Project as proposed in Exhibit "A" which exceed the grant award for qualified expenditures as defined in Section II.

C. PERMITS. RECIPIENT is responsible for obtaining all necessary permits and shall conduct the façade improvements in conformance with all state and local building codes, rules and regulations.

D. NON-DELINQUENCY. RECIPIENT shall not be delinquent on any current City charges, taxes, or assessments, or have defaulted on any previous City assistance.

E. RECORDS AND REPORTS. RECIPIENT will maintain and have available upon request of the RDA the following records in a format acceptable to the RDA:

1. Records which document receipt, utilization, and disbursement of funds pertinent to the assisted activity.
2. Be accessible for at least one on-site monitoring as needed to ensure contract compliance, verify performance goals, and confirm performance acceptability.

F. RETENTION. RECIPIENT shall retain all financial records, supporting documents, statistical records, and all other records pertinent to the Agreement for a period of four (4) years. The retention period begins on the date of the final draw of subgrant funds.

G. PROJECT COMPLETION. RECIPIENT agrees to complete the Project in accordance with RDA and CITY approved plans no later than ONE YEAR FOLLOWING CDI GRANT APPROVAL (hereinafter "Completion Date"). The Project shall be deemed completed upon the final approval of the City's Building Inspector. In the event RECIPIENT fails to complete the Project by the Completion Date, the RDA may at its sole discretion rescind the subgrant award and recover any and all funds previously issued to the RECIPIENT under this Agreement.

VI. CONFLICT OF INTEREST. No person who is an employee, agent, consultant, officer, elected official or appointed official of the City of Green Bay who exercises any function or responsibility in the review or approval of this undertaking or carrying out of this project, shall participate in any decision relating to this Agreement which affects his or her personal interest or have any personal or pecuniary interest, direct or indirect, in this Agreement or proceeds thereof. Further, no employee, officer or agent of the RECIPIENT shall participate in the selection, or in the award, or administration of, a contract or other matter relating to the receipt of federal funds if a conflict of interest, real or apparent, would be involved.

VII. INDEMNIFICATION. For the purpose of use of TIDAH funds disbursed to RECIPIENT pursuant to this Agreement, RECIPIENT hereby agrees to indemnify, defend and hold harmless the RDA, its elected and appointed officials, officers, employees, agents, representatives and volunteers, and each of them, from and against any and all suits, actions, legal or administrative proceedings, claims, demands, damages, liabilities, interest, attorneys' fees, costs and expenses of whatsoever kind or nature in any manner directly or indirectly caused, occasioned, or contributed to in whole or in part or claimed to be caused, occasioned, or contributed to in whole or in part, by reason of any act, omission, fault, or negligence, whether active or passive, of RECIPIENT or of anyone acting under its direction or control or on its behalf, even if liability is also sought to be imposed on RDA, its elected and appointed officials, officers, employees, agents, representatives and volunteers. The obligation to indemnify, defend and hold harmless the RDA, its elected and appointed officials, officers, employees, agents, representatives and volunteers, and each of them, shall be applicable unless liability results from the sole negligence of the RDA, its elected and appointed officials, officers, employees, agents, representatives and volunteers.

RECIPIENT shall reimburse the RDA, its elected and appointed officials, officers, employees, agent or authorized representatives or volunteers for any and all legal expenses and costs incurred by each of them in connection therewith or in enforcing the indemnity herein provided.

In the event that RECIPIENT employs other persons, firms, corporations or entities as part of the work covered by this Agreement, it shall be RECIPIENT'S responsibility to require and confirm that each third party enters into an Indemnity Agreement in favor of the RDA, its elected and appointed officials, officers, employees, agents, representatives and volunteers, which is identical to this Indemnity Agreement.

This indemnity provision shall survive the termination or expiration of this Agreement.

## VIII. TERMINATION AND REMEDIES.

A. It is the intent of the Project to eliminate blight, generate increased tax base, and encourage business development. These goals have both tangible and intangible costs that are difficult to place a value on. Therefore, in the event the RECIPIENT fails to complete the Project by the Completion Date, the RDA may at its sole discretion rescind the subgrant award and recover any and all funds previously issued to the RECIPIENT under this Agreement.

B. Except as otherwise provided in this Agreement, in the event of any default or breach of this Agreement, the breaching party shall, upon written notice from the other party, proceed immediately to ensure or remedy such default or breach, and, in any event, within sixty (60) days after receipt of such notice unless such default or breach cannot, with reasonable diligence, be cured within this period. In this event, the breaching party shall commence action to cure within the 60-day period and diligently proceed to cure the breach. In case such action is not taken or not diligently pursued, or the default or breach is not be cured or remedied within a reasonable time, the aggrieved party may institute proceedings as may be necessary or desirable, in its opinion, to cure and remedy the breach, including, but not limited to, proceedings to compel specific performance by the party in default or breach of its obligation.

C. Completion of the Project in accordance with the terms and conditions of this Agreement is the essential and unique consideration for the obligations of the RDA. Accordingly, the RDA may, in the event of legal proceedings, seek remedies to compel the specific performance of the defaulting party as the only adequate remedy and shall not seek damages in lieu of specific performance unless specific performance is legally unavailable, in which event the RDA may seek damages as authorized.

## IX. MISCELLANEOUS PROVISIONS.

A. The time for performance of any term, covenant, condition, or agreement of this Agreement shall be extended by any period of unavoidable delays. In this Agreement, "unavoidable delays" means beyond the reasonable control of the party obligated to perform the applicable term, covenant, condition, or agreement under this Agreement and shall include, without limiting the generality of the foregoing, delays, attributable to acts of God, any other party in this Agreement, strikes, labor disputes, governmental restrictions, court injunctions, riot, civil commotion, acts of public enemy and casualty.

B. The RDA and RECIPIENT shall have the right to institute such actions or proceedings as they may deem desirable for effectuating the purpose of this Agreement; provided that any delay in instituting or prosecuting any such actions or proceedings or otherwise asserting such rights, shall not operate as a waiver of such rights to, or deprive it of or limit such rights in any way. It is the intent of this provision that a party should not be constrained, so as to avoid the risk of being deprived of or limited in the exercise of any remedy because of concepts of waiver, latches, or otherwise, to exercise such remedy at a time when it may still hope otherwise to resolve the problems involved. No waiver in fact made with respect to any specific default, shall be considered or treated as a waiver of any rights with respect to other defaults or with respect to the particular default except to the extent specifically waived in writing.

C. This Agreement shall be governed by and construed in accordance with the laws of the State of Wisconsin governing agreements made and fully performed in Wisconsin. If any provision of this Agreement, or the application thereof to any persons or circumstances shall, to any extent, be invalid or unenforceable, then the remainder of this Agreement or the application of such provision, or portion thereof, and each provision of this Agreement shall be valid and enforceable to the fullest extent permitted by law. This Agreement sets forth the entire understanding between the RDA and RECIPIENT with respect to its subject matter, there being no terms, conditions, warranties, or representatives with respect to its subject matter other than that contained herein. This Agreement shall be binding upon and shall inure to the benefit of the parties hereto, their respective successors and assigns.

D. ASSIGNMENT. RECIPIENT may not assign this Agreement or sell to a third party without the prior consent of the RDA.

E. AMENDMENTS TO AGREEMENT. This Agreement may not be changed orally, but only by agreement in writing and signed by the parties hereto.

F. THIRD PARTIES. Except as expressly provided otherwise in this Agreement, the provisions of this Agreement are for the exclusive benefit of the parties hereto and not for the benefit of any other persons, as third party beneficiaries or otherwise, and this Agreement shall not be deemed to have conferred any rights, expressed or implied, upon any other person.

G. NO PARTNERSHIP CREATED. This Agreement specifically does not create any partnership or joint venture between the parties hereto, or render any party liable for any of the debts or obligations of any other party.

H. FORMALITIES AND AUTHORITY. The parties hereto represent and warrant that they are validly existing and lawful entities with the power and authorization to execute and perform this Agreement. The headings set forth in this Agreement are for convenience and reference only, and in no way define or limit the scope of content of this Agreement or in any way affect its provisions.

I. NOTICES AND DEMANDS. A notice, demand, or other communications under this Agreement shall be sufficiently given or delivered if it is deposited in the United States mail, registered or certified mail, postage prepaid, return receipt requested, or delivered personally:

| | |
|---|---|
| TO RECIPIENT: | Garritt Bader, Manager<br>BFAM, LLC<br>300 N Van Buren St.<br>Green Bay, WI 54301 |
| TO RDA: | Neil Stechschulte, Secretary<br>Redevelopment Authority of the City of Green Bay<br>100 North Jefferson Street, Room 608<br>Green Bay, WI 54301 |

or to such other address, within the United States, with respect to a party as that party may from time to time designate in writing and forward to the other as provided in this Section. A copy of any notice, demand, or other communication under this Agreement

given by a party under this Agreement to any other party under this Section shall be given to each other party to this Agreement.

J. NONMERGER AND SURVIVAL. Any provision in this Agreement which has not been fully performed prior to transfer of possession shall not be deemed to have terminated, but shall, unless expressly waived in writing, survive such transfer of possession and be in force and effect until performed.

SIGNATURE PAGE TO FOLLOW

IN WITNESS WHEREOF, the parties hereto have caused this Agreement to be executed and effective as of the date first written above.

**Redevelopment Authority of the City of Green Bay**

_____
Gary J. Delveaux, Chairman

_____
Neil Stechschulte, Secretary

**ACKNOWLEDGMENT**

**State of Wisconsin**

Brown County. Personally came before me this _____ day of _____ _____, the above named Gary J. Delveaux, Chairman; Neil Stechschulte, Secretary Redevelopment Authority of the City of Green Bay

to me known to be the person ___ who executed the foregoing instrument and acknowledge the same.

Notary Public Brown County, Wis.
My commission is permanent. (If not, state expiration date:
_____ ,20 _____ .)

**RECIPIENT: BFAM, LLC**

Garritt Bader

**ACKNOWLEDGMENT**

**State of Wisconsin**

Brown County. Personally came before me this day of , the above named Garritt Bader, BFAM, LLC

to me known to be the person who executed the foregoing instrument and acknowledge the same.

Notary Public Brown County, Wis.
My commission is permanent. (If not, state expiration date: ,20 .)

**THIS INSTRUMENT WAS DRAFTED BY**

Ronda Bitney
Redevelopment Authority of the City of Green Bay

EXHIBIT A

See attached proposal for 317 Dousman Street

Report to the
# Improvement and Service Committee of the City of Green Bay

| MEETING DATE | PREPARED BY |
| --- | --- |
| March 21, 2023 | |

## AGENDA ITEM # L.1

To approve the request by Meade Electric Co. Inc. to enter into an annual Hold Harmless Agreement for access to the City of Green Bay sewer system to conduct inspections of the sewer mains and laterals.

## BACKGROUND

## RECOMMENDATION

## FISCAL IMPACT

## ATTACHMENTS

1. Hold Harmless Agreement - Sewer Access

**File : HHA-SA 23-03**

# HOLD HARMLESS AGREEMENT - SEWER ACCESS

THIS AGREEMENT is made in the City of Green Bay, Brown County, Wisconsin, by and between the CITY OF GREEN BAY, A WISCONSIN MUNICIPAL CORPORATION (hereinafter "CITY"), and Meade Electric Co. Inc. (hereinafter "CONTRACTOR").

WHEREAS, CONTRACTOR wishes to conduct an inspection of the sewer main(s) and sewer lateral(s) in the street(s) identified on the attached plan sheet(s), in the City of Green Bay commencing the 22nd day of March, 2023; and

WHEREAS, the inspection conducted by CONTRACTOR will involve the use of Closed Circuit Television (CCTV) which will be inserted into the sewer main(s) and sewer lateral(s); and

WHEREAS, CONTRACTOR wishes to place vehicles and equipment in the CITY right-of-way located in the vicinity of the street(s) identified on the attached plan sheet(s);

NOW, THEREFORE, in consideration of the covenants and promises hereinafter set forth and other good and valuable consideration acknowledged by the parties herein, it is hereby agreed as follows:

1. CITY grants to CONTRACTOR permission to use CCTV to inspect the sewer main(s) and sewer lateral(s) identified on the attached plan sheet(s) commencing the 22nd day of March, 2023, and ending the 7th day of April, 2023.

2. CITY grants to CONTRACTOR permission to place its equipment and vehicles in the vicinity of the street(s) identified on the attached plan sheet(s) commencing the 22nd day of March, 2023, and ending the 7th day of April, 2023, in accordance with the terms and conditions of the City of Green Bay Street Obstruction Permit (granted separately).

3. CONTRACTOR shall submit plan sheet(s) of the area identifying all streets impacted and points of entry to the sewers, a list of all property owners to be notified, and any other information requested by the Department of Public Works.

4. CONTRACTOR shall present to the CITY a Certificate of Insurance with coverage and minimum policy limits as follows:

A. General Liability:

1. Commercial General Occurrence policy edition 2006 or 2010, including:

   a. Premises and Operations
   b. Products and Completed Operations
   c. Advertising and Personal Injury
   d. Explosion, Collapse and Underground Hazard coverage
   e. Contractual Insurance in writing under General Liability
   f. Broad Form Property Damage
   g. Coverage for Independent Contractors
   h. Care, Custody and Control coverage for City-owned materials at worksite
   i. Endorsement naming the City of Green Bay, its employees, agents and assigns as Additional Insureds as respects work performed by the Contractor/Subcontractor for the City/Owner.

2. Bodily Injury/Property Damage Combined Single Limits:

| | |
|---|---|
| a. Per Occurrence | $1,000,000 |
| b. Products/Completed Operations Aggregate | $2,000,000 |
| c. Personal Injury/Advertising Injury | $1,000,000 |
| d. Fire Damage Limit | $50,000 |
| e. Medical Payments Limit | $5,000 |
| f. General Aggregate | $2,000,000 |

B. Automobile Liability:

1. Coverage must include the following extensions:

   a. All Owned Autos
   b. All Hired Autos
   c. All Non-owned Autos
   d. Mobile Equipment
   e. Specialized Equipment
   f. Contractual Insurance
   g. Uninsured Motorist to Limit of Policy
   h. Additional Insured Endorsement naming City of Green Bay, its employees, agents and assigns.

2. Combined Single Limit/Bodily Injury and Property:

   a. Damage per person per accident $1,000,000
   b. Uninsured Motorists:

      i: Per person $25,000
      ii. Per accident $50,000

C. Workers' Compensation and Employers' Liability Insurance:

   1. Workers' Compensation:

      a. Per accident $1,000,000
      b. Disease policy limit $1,000,000
      c. Disease each employee $1,000,000

   2. Employers' Liability: $1,000,000

D. Contractor's Pollution Liability (Occurrence Basis): CONTRACTOR shall have a minimum liability limit of one million dollars ($1,000,000), which must include coverage for natural resources damage, waiver of subrogation, and transportation, loading and unloading coverage.

E. Umbrella Liability: CONTRACTOR shall provide five million dollars ($5,000,000) for bodily injury, personal injury and property damage per occurrence in excess of coverage carried for Employers' Liability, Commercial General Liability, and Automobile Liability.

The CITY, its officials, employees, and agents shall be named as "Additional Insured" on all policies which are listed in this section. This coverage shall be primary to the Additional Insured, and not contributing with any other insurance or similar protection available to the Additional Insured whether other available coverage is primary, contributing or excess. This contract shall include an endorsement stating the following: Written Notice of Cancellation or Non-Renewal shall be sent to:

City of Green Bay
Attn: Risk Management
100 North Jefferson Street
Green Bay, WI 54301-5006

Said Certificate of Insurance shall be attached hereto and incorporated herein by reference.

5. CONTRACTOR shall have a confined space entry program that meets or exceeds the requirements found in 29 CFR 1910.146.

6. CONTRACTOR hereby agrees to indemnify, defend and hold harmless the CITY, its elected and appointed officials, officers, employees, agents, representatives and volunteers, and each of them, from and against any and all suits, actions, legal or administrative proceedings, claims, demands, damages, liabilities, interest, attorneys' fees, costs and expenses of whatsoever kind or nature in any manner directly or indirectly caused, occasioned, or contributed to in whole or in part or claimed to be caused, occasioned, or contributed to in whole or in part, by reason of any act, omission, fault, or negligence, whether active or passive, of CONTRACTOR or of anyone acting under its direction or control or on its behalf, even if liability is also sought to be imposed on CITY, its elected and appointed officials, officers, employees, agents, representatives and volunteers. The obligation to indemnify, defend and hold harmless the CITY, its elected and appointed officials, officers, employees, agents, representatives and volunteers, and each of them, shall be applicable unless liability results from the sole negligence of the CITY, its elected and appointed officials, officers, employees, agents, representatives and volunteers.

CONTRACTOR shall reimburse the CITY, its elected and appointed officials, officers, employees, agent or authorized representatives or volunteers for any and all legal expenses and costs incurred by each of them in connection therewith or in enforcing the indemnity herein provided.

In the event that CONTRACTOR employs other persons, firms, corporations or entities (sub-contractor) as part of the work covered by this Agreement, it shall be CONTRACTOR'S responsibility to require and confirm that each sub-contractor enters into an Indemnity Agreement in favor of the CITY, its elected and appointed officials, officers, employees, agents, representatives and volunteers, which is identical to this Indemnity Agreement.

This indemnity provision shall survive the termination or expiration of this Agreement.

7. CONTRACTOR is solely responsible for placement, removal, repair or maintenance of said equipment and vehicles.

8. CONTRACTOR shall submit all post inspection records of sewer main and laterals and any records of sewer cleaning, if applicable, to CITY within two weeks of completing the work.

9. All damage to CITY and/or Private facilities shall be assumed to be caused by CONTRACTOR, unless the damage is reported to CITY by CONTRACTOR at the time of inspection.

10. This Agreement may be Amended only during the calendar year in which it has been granted.

11. This Agreement and permission granted may be revoked at any time by the CITY, upon written notice to CONTRACTOR.

--SIGNATURES ON FOLLOWING PAGE--

Meade Electric Co. Inc.

Dated: _____, 20__ By: _____

_____
PRINT OR TYPE NAME OF AUTHORIZED ABOVE

STATE OF WISCONSIN )
)ss.
COUNTY OF BROWN )

Personally appeared before me this _____ day of _____, 20___, the above-named _____, to me known to be the persons who executed the foregoing instrument and acknowledged the same.

_____
_____
PRINT OR TYPE NAME OF NOTARY ABOVE
Notary Public, _____ County, WI
My Commission Expires: _____

---

**CITY OF GREEN BAY**

Dated: _____, 20__

By: _____ Attest: _____

Eric Genrich, Mayor Celestine Jefferys, Clerk

STATE OF WISCONSIN )
)ss.
COUNTY OF BROWN )

Personally appeared before me this _____ day of _____, 20___, the above-named Eric Genrich, Mayor, and Celestine Jefferys, Clerk, to me known to be the persons who executed the foregoing instrument and acknowledged the same.

_____
_____
PRINT OR TYPE NAME OF NOTARY ABOVE
Notary Public, Brown County, WI
My Commission Expires: _____

Attachments: Facilities Map Showing Sewer Lines to be Entered and Points of Access

ATTACHMENT 1 OF 1

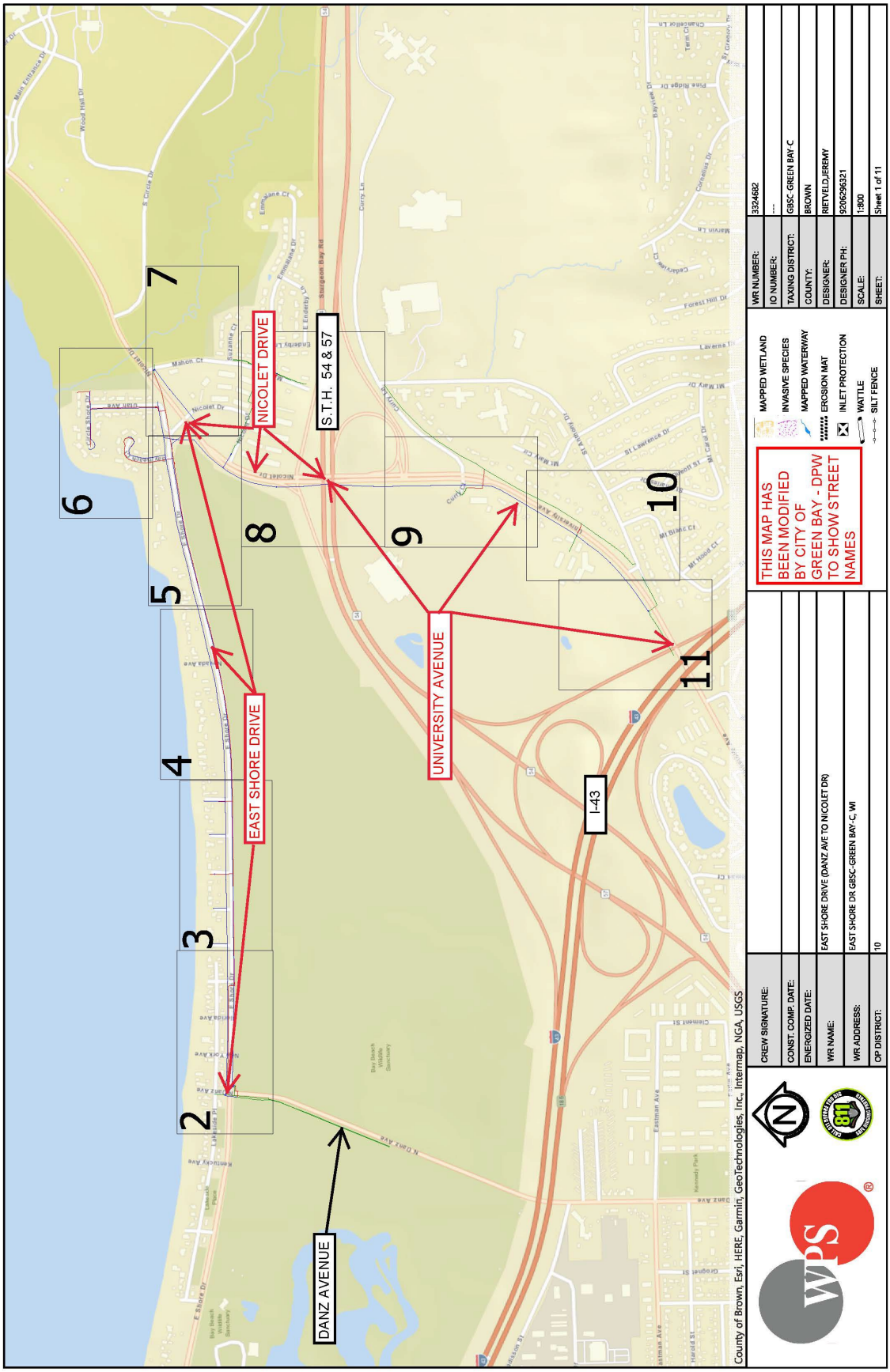

Report to the
# Improvement and Service Committee of the City of Green Bay

| MEETING DATE | PREPARED BY |
| --- | --- |
| March 21, 2023 | |

## AGENDA ITEM # L.2

To approve the request by Department of Public Works to contract with Kone, Inc., the City's elevator maintenance contractor, to complete repairs to Elevator #4 at the Pine Street Ramp in the amount of $29,995.

## BACKGROUND

## RECOMMENDATION

## FISCAL IMPACT

## ATTACHMENTS

1. PINE STREET RAMP ELEV 4 2-27-2023

# KONE Care™

PEOPLE FLOW REPAIR AND UPGRADE PROPOSAL

2/27/2023

**City of Green Bay**
Pine Street Ramp
333 Pine Street
Green Bay, WI 54301

Dear Justin:

The safety, performance and reliability of your vertical transportation equipment is important to us. We understand the value of the equipment to your building and know that the following areas are important to you:

- Passenger and employee safety
- Code compliance
- Performance and reliability
- Accessibility
- Aesthetics
- Eco-efficiency

Therefore, based on our detailed equipment evaluation, we thank you for the opportunity to submit the following proposal to you which will help improve your equipment in one or more of the above areas. Our trained service technicians will follow proven performance procedures to perform the recommended work in a safe, professional manner designed specifically for each piece of equipment.

Upon your approval, please sign and return the following proposal to our local Branch Office for processing or issue the appropriate purchase order number.

Should you have any questions regarding this agreement, or if we can be of any further assistance, please contact me at (920) 289-1085.

Sincerely,

Paul D. Olson

Sales Executive
KONE Inc.

2/27/2023

KONE Inc.
740 Moasis Drive, Suite J
Little Chute, WI 54140
Tel 920.289.1085
www.kone.com
paul.olson@kone.com

**City of Green Bay**
Pine Street Ramp
333 Pine Street
Green Bay, WI 54301

RE: Passenger Elevator Repair
Kone Equipment # 20309878 (State RO# 505219)
**Pine Street Elevator #4**

Dear Justin,

We propose to furnish and install the following for your Elevator #4 located at Pine Street Ramp for the sum of: **$29,995 (Twenty Nine Thousand Nine Hundred Ninety Five and 00/100 Dollars].** Price includes removal of existing components, use taxes, and permit.

## POWER UNIT REPLACEMENT

We will furnish and install a new hydraulic power unit. The motor and pump will be submersed under the oil inside the tank in order to provide for sound isolation. A muffler, designed to reduce pulsation and noise, which may be present in the flow of hydraulic oil, will be provided in the oil line at the top of the pump.

Control valves, including a safety check valve, an up direction valve with high pressure relief including up leveling and soft stop features and a lowering valve including down leveling and manual leveling feature, will be mounted in a compact unit assembly. A shut off valve, designed to shut off the flow of oil between the cylinder and the Power Unit, will be provided in the oil line in the machine room. Automatic two-way leveling will be provided to automatically stop and maintain the car approximately level with the landing, regardless of change in load.

Also included is changing out the oil in the elevator system; disposal of old oil; final adjustments to the valve for proper floor leveling; State elevator alteration permit; and State inspection.

Benefits:

- Improves ride quality and smoother starts & stops throughout the ride
- Improves passenger and tenant satisfaction by reducing noise pollution and vibration
- Improves reliability and availability - reduces service interruptions
- Reduces operating expenses for service requests not covered under your agreement
- Improves parts availability for power units which are obsolete and parts that are not readily available
- Improves leveling - minimizes the risk of tripping hazards which improves safety and reduces claims risk

Comprised of four major components – the tank, valve, pump and pump motor – which operate together to control the oil flow required to move and stop the elevator. Improper operation by any of the components in the power unit can result in more shutdowns, safety tripping hazards, entrapments, slower performance, uncomfortable start/stop & ride and more.

Price

Our total price to perform the above-mentioned work is: $29,995 plus applicable taxes. Our price includes applicable labor, material and permit fees. This proposal is not binding on KONE until approved by an authorized KONE representative. Pricing is subject to KONE's attached Terms and Conditions for tendered repairs and, by signing below, Purchaser hereby agrees to these Terms and Conditions. Price is valid for 30 days from the date of this proposal.

Down Payment

The above quoted price is based on a twenty-five percent (25%) down payment due within 30 days of signed proposal.

*ACCEPTANCE: The foregoing Agreement is hereby signed and accepted in duplicate on behalf of* **City of Green Bay**

_____
*(Signature)*

_____
*(Print Name)*

_____
*(Print Title)*

*Date:* _____ / _____ / _____

*Respectfully submitted by,*
*KONE Inc.*

*Paul D. Olson*

_____
*Paul D. Olson, Sales Executive*

_____
*(Approved By) Authorized Representative*

_____
*Title*

*Date:* _____ / _____ / _____

**Bid Attachment "A"**

**Terms and Conditions**

The parties agree to be bound by the terms and conditions contained in the Proposal, together with the terms and conditions contained herein. No amendment or other change to this Proposal is binding on KONE. KONE shall not order or release equipment for manufacturing prior to execution of a contract by both parties

**SPECIAL PURCHASING REQUIREMENTS**
This proposal is made without regard to compliance with any special purchasing and/or manufacturing requirements including, but not limited to, Buy America, Buy American, U.S. Steel, FAR clauses, minority/disadvantaged supplier requirements or similar state procurement laws. Should such requirements be applicable to this project, KONE reserves the right to modify and/or withdraw our proposal.

**VALIDITY OF QUOTATION**
Proposal scope, pricing, and terms are subject to review and change without notice prior to final contract execution by a KONE Corporate Officer. No representation is made that the proposal complies with all or part of any request for quotation, third party specification, or other document.

**WORK AND SERVICES NOT INCLUDED**
The Proposal is exclusive of all preparatory work, civil works, and all materials and services other than those clearly specified. This proposal specifically excludes any additional costs associated with concealed or subsurface conditions. Wiring and conduit outside of the hoistway and machine room are not included. The installation, maintenance, and the operating costs of the phone line for monitoring services shall be borne by the Customer.

**TEMPORARY USE**
Temporary use of the equipment may be granted, if required by contract, provided the use period allows adequate time for equipment restoration for final delivery. Temporary use will be invoiced separately per the KONE Temporary Use Agreement and is subject to payment terms indicated therein. The Customer shall assume all risk of temporary use and operation, supply its own operator and, at the end of the temporary use period, return the equipment to KONE in "like new" condition. Specific noise ratings cannot be guaranteed, due to the different building characteristics and ambient noise levels.

**PRICE**
Under no circumstances shall KONE be responsible for labor and material cost adjustments resulting from project delays which extend beyond the end of the current calendar year. This amount and/or extensions of time shall only be adjusted by properly approved change orders indicating related modifications to the scope of work and/or to the terms and conditions.

**INSTALLATION**
The work shall be performed during regular I.U.E.C. working hours and days, Monday to Friday, statutory holidays excluded. Any changes in the progress schedule with respect to the sequence, acceleration or duration of work shall be mutually agreed upon.

If overtime work is mutually agreed upon and performed, the additional price for such work shall be added to the Proposal price at KONE's standard overtime rates. KONE will not commence overtime work without an executed change order.

If the installation work and final acceptance cannot be performed in an uninterrupted manner for any reason beyond KONE's control, the Customer shall provide storage and protect the supplied equipment at the Customer's risk and cost and separately compensate KONE for any costs caused by such delay including, but not limited to, double handling of equipment.

KONE will provide union labor and will make reasonable efforts to ensure that they will work in

harmony with others and behave in an appropriate manner while on site.

**PAYMENT TERMS**

Payments are due 30 days from invoice date, based on work progress as follows:

A. Customer agrees to pay zero percent (0%) of the Agreement amount including any accepted options and/or alternates upon acceptance of this Agreement.
B. Monthly progress billings may be issued by KONE to cover label expended and materials stored on or off site during the month.
C. Customer agrees to pay the amount of any tax imposed by any existing law, or by any enacted after the date of this Agreement, based upon the transfer, use, ownership or possession of the equipment involved in the services rendered herein.
D. Final payment shall become due and payable upon completion of the work described in this Agreement. Failure to pay any sum due to KONE within thirty (30) days of the invoice will be a material breach. Simple interest at 1.5% per month will be charged on amounts not paid when due. In the event of default on the payment provisions herein, Customer agrees to pay, in addition to any defaulted amount, all attorney fees, collection costs in connection therewith, and all prejudgment interest.

KONE reserves the right to delay and/or suspend the work and services, including manufacturing, delivery, installation and/or final turnover of the equipment, for non-payment. KONE also reserves the right to suspend all warranty service if final payment is not received within forty-five (45) days from the completion of the Project. In states requiring notice prior to filing a lien, this notice requirement is deemed satisfied through this paragraph. Prior to returning the equipment to service, KONE must be paid in full, less

10% maximum retention, the contract value including all change orders. Additionally, prior to turnover KONE requires a signed Final Acceptance Form and receipt of a Final Punchlist for the project from all parties.

In the event that Purchaser does not accept delivery of material at the Project Site when KONE is ready to make such delivery, Purchaser agrees to immediately make payments due upon shipment as provided above and designate some local point where Purchaser will accept delivery. Upon Purchaser's failure to designate such a point of delivery within 14 calendar days, KONE is authorized to warehouse material within or without our factory at Purchaser's risk and expense. Purchaser assumes responsibility for any increase in KONE's costs (at its standard billing rates) because of any such exceptional handling. Purchaser will be responsible for any damage, including, but not limited to, weather damage, vandalism, etc., to material awaiting acceptance in the event Purchaser fails to accept delivery when KONE is ready to deliver.

Should KONE be delayed by reason of any default on Purchaser's part, the entire Contract Price, less payments theretofore made and less the cost of completing work, as estimated by KONE, shall become due on the date when the proposed equipment was to be in running order had KONE been permitted to commence regular time installation labor on the date shown in this Proposal. This amount due shall bear interest at the full legal rate commencing on such anticipated completion date. Purchaser shall compensate KONE for delays, regardless of whether caused by Purchaser or any other entity, including other subcontractors.

**PROPERTY RIGHTS**

The delivered material shall remain the property of KONE and KONE shall retain title thereto until final payment is made, with the right to take repossession of the same at the cost of Customer if default is made in any of the payments, irrespective of the manner of attachment to the realty, the acceptance of notes, or the sale, mortgage, or lease of the premises.

The proprietary rights to any drawings, technical documentation or other intellectual property, shall remain solely with KONE. Any software delivered shall remain the property of KONE or the respective supplier. The software supplied with your elevator is licensed to you or your successors but only for use with, and for the operation of this elevator. Use of

such software for any other purpose is prohibited. KONE will not supply any additional information such as internal KONE manuals, manufacturing drawings or source code.

Any counters, meters, tools, remote monitoring devices, communication devices, resident software or other service equipment ("Additions") which we may use or install to deliver maintenance service under this Agreement remains KONE's property, solely for the use of our employees. Additions are not considered as part of the elevator. If this contract or subsequent maintenance service is terminated for any reason, we will be given access to the premises to remove the KONE Additions at our expense.

**WARRANTY**

KONE warrants the materials and workmanship of the equipment for one (1) year after acceptance. Customer's remedy is limited to repair or replacement of a defective part, in KONE's sole discretion. The warranty is limited to the replacement or repair of the part itself, and excludes labor. In no event shall KONE be responsible for damage due to normal wear and tear, vandalism, abuse, misuse, neglect, work or repairs or modifications by others, or any other cause beyond the control of KONE. KONE disclaims any other warranty of any kind, either expressed or implied, including without limitation the implied warranties of merchantability or fitness for a particular purpose, or noninfringement. KONE undertakes to perform this work in conformity with the usual applied codes and standards; however, no guarantee can be made that all code violations or defects have been found.

**LIABILITY LIMITATION**

**THE CUSTOMER AGREES TO INDEMNIFY, DEFEND AND HOLD HARMLESS KONE FROM ANY LOSS, DAMAGE OR CLAIM FOR DAMAGES OR INJURIES, INCLUDING DEATH, CONNECTED WITH THE USE OR OPERATION OF THE EQUIPMENT. SHOULD DAMAGE OCCUR TO KONE MATERIAL OR WORK ON THE PREMISES WHERE WORK IS TO BE OR IS BEING PERFORMED, BY FIRE, THEFT OR OTHERWISE, THE CUSTOMER IS TO COMPENSATE KONE FOR SAID DAMAGES. KONE'S OBLIGATION TO DEFEND, INDEMNIFY AND HOLD CUSTOMER HARMLESS SHALL BE LIMITED TO THE EXTENT A CLAIM FOR DAMAGES OR INJURIES RESULTS FROM KONE'S NEGLIGENT ACTS OR OMISSION OR WILLFUL MISCONDUCT, BUT NOT THE NEGLIGENT ACTS OR OMISSIONS OR WILLFUL MISCONDUCT OF OTHERS. KONE WILL NOT NAME ANY PARTY AS ADDITIONAL INSURED TO THEIR POLICY.**

**DAMAGES**

KONE shall not be responsible for liquidated damages or any indirect, incidental, or consequential damages. KONE's liability under any circumstances shall be no more than 5% of the Proposal value of the equipment concerned.

**FORCE MAJEURE**

KONE shall not be liable for any loss, damage, claim or delay due to any cause beyond KONE's control including, but not limited to, acts of government, strikes, lockouts, work interruption or other labor disturbance, fire, explosion, theft, floods, riot, civil commotion, war, malicious mischief, or acts of God.

**OCCUPATIONAL HEALTH & SAFETY**

We agree to abide by Owner's or Contractor's Safety Policy as long as the policy is not in conflict with KONE's Safety Policy. KONE agrees to accept liability for the cost of penalties incurred by you pursuant to governing Occupational Health & Safety acts that result from our acts or omissions on the condition that the cost of any similar penalties imposed on KONE because of your acts or omissions or anyone employed by you shall be borne by you.

Customer agrees to provide safe access to the equipment and

machine room areas. Should conditions develop beyond KONE's control, making the building or premises in which KONE's personnel are working

unsafe, including but not limited to asbestos or polychlorinated biphenyl (PCB), encountered on the site by KONE, KONE reserves the right to discontinue work until such unsafe conditions are corrected.

It is agreed and understood that KONE is not responsible for damages, either to vertical transportation equipment or to the building, or for any personal injury or death, arising from or resulting from any code required safety tests performed on this equipment.

**MISCELLANEOUS**

Customer agrees that in the event this Agreement is terminated by Customer prior to the completion of the work, Customer will pay all costs incurred as of the date of cancellation plus 30% of the Agreement value as cancellation fees to compensate KONE for lost profit, overhead, and other cancellation expenses.

This Agreement may be terminated for default provided that KONE is first allowed a reasonable time, upon receipt of written notice, to commence and continue to cure a deficiency.

**It is expressly understood and agreed all prior agreements written or verbal regarding the subject matter herein are void. The acceptance of this Agreement shall constitute the contract for the material and work specified in this Agreement and shall prevail over and supersede any terms and conditions contained in any documents provided by the Customer. Any changes to this Agreement must be made in writing and signed by both parties.**

Report to the
# Improvement and Service Committee of the City of Green Bay

| MEETING DATE | PREPARED BY |
| --- | --- |
| March 21, 2023 | |

## AGENDA ITEM # L.3

To approve the request by Department of Public Works to award Danz and Military Landfills - Native Planting Maintenance to NES Ecological Services in the amount of $28,500.

## BACKGROUND

## RECOMMENDATION

## FISCAL IMPACT

## ATTACHMENTS

1. Military Danz Native Planting Maintenance Proposal

1250 Centennial Centre Blvd
Hobart, WI 54155
920-499-5789
Website: www.neswi.com
E-Mail jhavel@releeinc.com

February 17, 2023

Ms. Trista Hobbs
CITY OF GREEN BAY
100 North Jefferson Street, Room 300
Green Bay, WI 54301
Trista.Hobbs@greenbaywi.gov

RE: Danz & Military Landfills
Native Planting Maintenance Proposal

Dear Ms. Hobbs:

NES Ecological Services, A Division of Robert E. Lee & Associates, Inc. is pleased to submit this proposal to assist with continued management of the native vegetation installed at the Danz and Military Landfills.

## SCOPE OF SERVICES

### *Maintenance Activities*

#### Herbicide Applications

NES has accounted for a variety of possible treatment methods and herbicides that could be used for the two sites. NES staff utilize their combined experiences in order to cost effectively, and successfully, treat invasive species such as Canada thistle (*Cirsium arvense)*, Phragmites (*Phragmites australis)*, purple loosestrife (*Lythrum salicaria)*, reed canary grass (*Phalaris arundinacea)*, sweet clover (*Melilotus sp.)*, birdsfoot trefoil (*Lotus corniculatus)*, crown vetch (*Coronilla varia)*, and many others. The goal is to achieve less than 20% cover by invasive, non-native species for each site. NES plans to utilize, according to the amount and location of the undesirable species, hand treatment methods such as hand wicking or cut stem applications for small populations, and backpack sprayers with wands and diaphragm pumps. If certain annual or biennial species are present in small quantities, such as Sweet Clover, Bull thistle, or others, and have not yet gone to seed, they may simply be pulled or cut by hand as well. This will destroy the plant and prevent reproduction while reducing chemical use. The NES team will have a UTV with them along with tanks to be utilized for actively spraying and also as a backup water supply. Areas or species requiring a scale larger than hand work will be treated with a spray wand from an UTV mounted sprayer and/or a boom from the same unit. NES staff will have on hand a variety of herbicides with different modes of action and active ingredients to utilize at the appropriate times. Herbicides such as Garlon are highly effective on woody and cut stump treatments, along with species such as purple loosestrife that is not emerging out of the water. For areas such as “No-Mow” zones or areas planted solely with native grasses and sedges that require occasional broad-leaf weed control, 2,4-D (Mec Amine-D) will be utilized. Glyphosate based herbicides such as Roundup® or equivalent will be used,

both in upland and emergent (Roundup Custom® – aquatic approved) situations. Glyphosate is a highly effective broad-based herbicide that is cost effective as well. Clethodim (Intensity One®) is a grass selective herbicide that can only be utilized if standing water or saturated soils are absent but can be very effective in controlling reed canary grass and other undesirable cool season grasses found within prairies. In some cases, mixing two chemicals will be more effective. NES staff will determine the best approach by assessing the species present. Spray additives such as adjuvants and oils will be utilized for situations where it will enhance the effect of the herbicide and the herbicide's ability to uptake into the plant. For most applications, a surfactant such as Activator 90 or Methylated Seed Oil (MSO) is added to the herbicide solution because the wetting agent and activator helps break down the waxy leaf cuticle in plants such as crown vetch and increases herbicide uptake. A marking dye such as Aquamark Blue SS is also added to ensure appropriate coverage and to reduce overspray.

In general applications will not occur if:

- Winds >15 mph – drift onto adjacent properties and non-targeted vegetation shall be avoided
- Vegetation is wet
- Rain is expected within 2-4 hours of treatment (label required dry time)
- Temperature inversions are possible
- Freezing temperatures are forecast either early or late in the growing season

Conditions including wearing the appropriate Personal Protective Equipment (PPE) listed on the chemical labels will be observed. Following the above guidelines will also help prevent ecological damage, minimize potential health issues and loss of productive time due to ineffective applications.

Although most herbicide work will be reactive, concentrating efforts on the fringes or buffers of the native plant communities could be proactive in nature and prevent possible invasions into well-established and relatively weed free communities. NES ecologists will be sure to assess and address these areas first to prevent undesirable plant infestations. Taking a more aggressive approach in these buffer areas should reduce the overall time and money spent on the facility. Our ecologists are also very aware of the damage herbicides pose to the environment, especially if used at a rate higher than recommended on the label or needed for good control. Using their experience in controlling similar species, our staff will utilize the least amount of chemical possible to achieve control. These actions will benefit both the environment and overall costs since less chemical would be utilized for the project. The NES team is highly skilled at plant identification which will help ensure that desirable plants will not be negatively impacted during the herbicide work. NES applicators are certified and licensed in the appropriate categories, such as Forestry, Right-of-Way & Natural Areas and Aquatic & Mosquito.

Prior to conducting the herbicide application, posting and notification requirements will be followed. Herbicide Application Records (DATCP form) will be submitted within 30 days of each treatment to the City.

The information below is a discussion of various treatment methods NES has utilized successfully on various invasive plants. The species discussed are not meant to be all inclusive of those found throughout the two landfills managed by the City; but rather, the material covers many of the species routinely being treated.

### *Mesic Prairie*

Areas planted with mesic prairie species mixture will need routine maintenance. An abundance of annual and perennial weeds invade newly planted sites no matter how much preparation work is completed prior

to seeding. A combination of mowing and spot herbicide treatment will be critical in the first 3-4 years of establishment. Once the warm season grasses have become dense enough to provide a suitable litter layer, the community can be managed with prescribed burns. Fire will assist with controlling many undesirable species; however, pressure from invasive species will still warrant occasional mowing, hand removal or spot herbicide applications for optimum control.

Below are activities to consider for maintaining the upland seeding. Species listed below are those most problematic and commonly found invasive plants within native communities.

### *Biennial & Annual Broadleaf Weeds*

Sweet clovers (*Melilotus spp*.), wild carrot (*Daucus carota*) and burdock (*Arctium minus*), along with other less aggressive yet undesirable annual and biennial species can be controlled, and populations reduced through repetitive cutting. For this reason, we suggest conducting one or two mowings during the third growing season or when needed. Mowing or hand cutting or pulling is typically conducted when the plants are mature and in the beginning stages of flowering to ensure the best control. However, mowing must be done in a timely manner and not too often as the plants will begin growing lower to the ground and be more difficult to control through mowing efforts. In the event that individuals are found with mature seed heads, those plants are manually pulled or cut with machetes/loppers prior to setting seed, bagged, and removed from the site. Noxious/invasive weeds are properly disposed of in a landfill. In rare cases, herbicide may be applied through spot applications, but there is an increased risk of damaging native species within the planting, which can be avoided through the mechanical removal process.

### *Perennial Broadleaf Weeds*

Canada and bull thistles (*Cirsium arvense* and *C.vulgare*), red, white and alsike clovers (*Trifolium pratense*, *T. repens*, and *T. hybridum*), crown vetch (*Coronilla varia*), teasel (*Dipsacus spp*.) and bird's-foot trefoil (*Lotus corniculatus*) along with other aggressive perennial weeds can be controlled to some degree through mowing and burning activities prior to seed set, but full control may require herbicide applications. The steps we recommend following include:

1) A herbicide solution, including the chemical (Roundup Custom®, Habitat®, Transline®, etc.), a surfactant or MSO and marking dye, is applied through one of the below methods:
    a) Broadcast spray solution containing a combination of 1% glyphosate or imazapyr and 2/3 to 1 1/3 pint/acre of Transline on the target plants. Backpack sprayers are typically used. If plant densities are relatively low, this method or combination would not be used because there is an increased chance of impacting the surrounding, native vegetation through drift since glyphosate and imazapyr are non-selective herbicides. To reduce impacts with this solution, a spray bottle or hand wicking could be substituted.
    b) Broadcast spray solution containing 2/3 to 1 1/3 pint/acre of Transline on the target plants. The chemical is more selective and targets broadleaf plants so grasses won't be impacted; however, caution must be used around native forbs. The choice of application will depend on the population size of the targeted species.

Ideally these species will be identified and sprayed either very early or late in the growing season prior to or after native plant growth. If species are located during the growing season, they would either be sprayed or cut to prevent seeding. Mature seed heads will be removed and properly disposed of to prevent further spread. Follow-up treatments will likely be required.

### *Perennial Grasses*

Reed canary grass, fescues (*Festuca spp.*), smooth brome and cheat grass (*Bromus inermis* and *B. tectorum*), Kentucky bluegrass (*Poa pratensis*), and quack grass (*Elytrigia repens*) along with other aggressive perennial grasses can be controlled to some degree, like the perennial broadleaf weeds, through mowing and prescribed burning activities prior to seed set, but full control may require herbicide applications. Although these grasses can be located and identified early in the growing season, they may be more easily identified during the flowering stage; therefore, additional steps may be necessary to prevent their spread. The steps we recommend following include:

*Single Plants or Small Clusters*

1) Seed heads, if present, will be cut and placed in thick, plastic bags and removed to a licensed landfill facility for proper disposal.
2) A herbicide solution, including the chemical (Roundup Custom®, Habitat® or Intensity® One, etc.), a surfactant or MSO and marking dye, will be applied through one of the below methods:
    a) Apply solution containing 25-30% glyphosate or imazapyr or 5% clethodim to the plant using the "Glove of Death" technique. The technique involves spraying the solution onto a cotton glove that is worn by the applicator over chemically resistant gloves; the applicator then takes hold of the plant near the base and runs the cotton glove up the plant stem.
    b) Broadcast spray solution containing 1-2% glyphosate or clethodim on the target plants. Rates may need to be adjusted if the plants are mature. Backpack sprayers are typically used. If plant densities are relatively low, this method is not generally used because there is an increased chance of impacting the surrounding, native vegetation through drift since glyphosate and imazapyr are non-selective herbicides. The exception would be with the use of clethodim as this chemical is grass selective; however, caution would still need to be taken when spraying around native grass species.

*Large Clusters or Populations*

1) Grass will be cut prior to seed development and allowed to re-grow if time doesn't allow for a herbicide application.
2) Conduct a broadcast spray as discussed above.

Follow-up treatments will likely be required. NES may also recommend over-seeding with native grasses in the fall, if the remaining vegetation present is sparse.

NES ecologists will visit the site a minimum of three times throughout the growing season (late May/early June, late July/early August and September) to address noxious weeds. However, some species may require earlier (April) and later (October) treatments to avoid impacting native species.

## Mow Vegetation to 6"-8" Height

Mowing of native restoration areas is a good tool at times to manage vegetation. It can help aesthetically, making the community look nicer in spring. It can open sunlight to the ground more quickly to get vegetation growing, similar to a benefit burning provides. This activity may occur if enough fuel is not present to effectively carry a fire through a community. Mowing can set back invasive vegetation by

stressing it and preventing flowering and above-ground reproduction. It is also significantly more cost effective than herbiciding, especially worth considering when one is attempting to control species that can be more difficult to manage with herbicides, such as sweet clover (a biennial), and even red clover (*Trifolium pratense*). Certain leguminous problem species such as red clover and Birdsfoot trefoil, are well controlled through a timely mowing (early spring, late fall), to allow the mowed legume to re-sprout, and then follow with an herbicide application to the green leaves when the vast majority of native species are dormant. We suggest conducting mowing when needed, which is typically when the plants are mature and in the beginning stages of flowering to ensure the best control. However, mowing must be done in a timely manner and not too often as the plants will begin growing lower to the ground and be more difficult to control through mowing efforts. In the event that individuals are found with mature seed heads, those plants will be manually cut with machetes or loppers prior to setting seed, bagged, and removed from the site. Noxious/invasive weeds are properly disposed of in a landfill. NES proposes using this method in areas that are appropriate.

NES will utilize an ATV or a small to mid-size tractor with a mowing implement attached to the back. The mowing decks will be set to achieve a 6-8" mowing height. The crew leader conducting the mowing will also have a hand weed-whacker along to cut areas inaccessible with the mower, such as around structures. Mowing operations will be conducted in spring, mid-summer prior to flowering/seeding of invasive species, and late fall, especially if targeting for a fall herbicide application. However, this task may be conducted any time throughout the growing season if assessments warrant the need.

### Spot Mowing

The use of spot mowing provides the same benefits as the mowing activity discussed above; however, in some cases, only small patches of weeds interspersed with native vegetation need to be cut to prevent seed development, shading or provide aesthetic value to an established, native plant community. Larger equipment may not be very effective in maintaining these areas; therefore, NES would plan on using weed-whackers and/or machetes, to cut those populations. Timing of this activity is very important especially when the prevention of seed development is the goal. Site reviews will be vital to ensure this activity is carried out in a timely fashion.

## SCHEDULE

A schedule for recommended activities is outlined below.

Native Habitat Maintenance Activities Schedule.

| Task | Year 2023 | | | | | | | | | | | |
|---|---|---|---|---|---|---|---|---|---|---|---|---|
| | Jan | Feb | Mar | Apr | May | Jun | Jul | Aug | Sep | Oct | Nov | Dec |
| Herbicide Application | | | | | | | | | | | | |
| Mow Vegetation to 6"-8" Height or Spot Mow Weed Populations | | | | | | | | | | | | |

## COST

Costs to complete the maintenance activities will be billed on a time and expense basis estimated to be $28,500 based on the below cost breakdown for each landfill.

**Danz**

| **Task** | | **Cost** |
|---|---|---|
| *Professional Services* | *Project Management & Herbicide Records* | $ 800 |
| *Herbicide (3 applications)* | *Application, Supplies, Equipment & Travel* | $10,200 |
| *Mowing (2 site visits)* | *Mowing, Equipment & Travel* | $ 3,500 |
| | **TOTAL COST** | **$14,500** |

**Military**

| **Task** | | **Cost** |
|---|---|---|
| *Professional Services* | *Project Management & Herbicide Records* | $ 800 |
| *Herbicide (3 applications)* | *Application, Supplies, Equipment & Travel* | $10,000 |
| *Mowing (2 site visits)* | *Mowing, Equipment & Travel* | $ 3,200 |
| | **TOTAL COST** | **$14,000** |

If you have any questions or there are other items you wish to include, please contact me. Otherwise, if the proposal is acceptable, please sign and return a copy. We look forward to working with you again. Thank you.

Sincerely,

NES ECOLOGICAL SERVICES

James Havel
Division Manager
Senior Ecologist
jhavel@releeinc.com

ROBERT E. LEE & ASSOCIATES, INC.

Jared Schmidt, P.E.
Principal
jschmidt@releeinc.com

JRH/jrh

ENC.

# PROFESSIONAL SERVICES AGREEMENT

# FEBRUARY 17, 2023

THIS AGREEMENT is made and entered into this 17th day of February 2023, by and between the City of Green Bay hereinafter referred to as the "Client", and NES Ecological Services, A Division of Robert E. Lee & Associates, Inc., 1250 Centennial Centre Boulevard, Hobart, Wisconsin 54155, hereinafter referred to as "NES".

## SCOPE OF SERVICES

The Project Scope outlined in the attached project proposal shall serve as the Scope of Services for this contract.

## COMPENSATION

Compensation for the project will be billed on a time and expense basis estimated to be $28,500.00, which includes all labor, travel costs, materials, and equipment necessary to complete the project.

## TERMS

A. Consulting fees and work items will be billed monthly as incurred. Payments are due within 30 days of invoice date. Amounts unpaid at due date are subject to a service charge of 1.5% per month until paid.

B. NES shall exercise due care in performing professional services, but NES makes no warranty, express or implied, with respect to any services performed by NES. NES shall not be liable for any claim, damage, cost or expense (including attorney's fees) or any other liability or loss or damage to the Client not directly and solely caused by acts, errors, or omissions by NES. In no event shall NES' liability for incidental or consequential loss to the Client in connection with performance of this Agreement exceed the aggregate of all fees paid to NES by Client for these services.

C. NES reserves the right to suspend or terminate this contract, should any invoice not be paid in full within 30 days of the date of the invoice. Should collection litigation be necessary, client acknowledges NES will include attorney's fees and all related costs as a part of the legal action.

D. The Client shall indemnify and hold harmless NES, NES' officers, directors, partners, employees and agents from and against any and all costs, losses and damages caused solely by the negligent acts or omissions of the Client, Client's officers, directors, partners, employees and agents in the performance and furnishing of the Client's services under this Agreement.

NES shall indemnify and hold harmless the Client, the Client's officers, directors, partners, employees and agents from and against any and all costs, losses and damages caused solely by the negligent acts or omissions of NES, NES' officers, directors, partners, employees and agents with respect to this Agreement or the associated Project.

NES' total liability to the Client and any party claiming by, through or under the Client for any cost, loss or damages caused in part by the negligence of NES and in part by the negligence of the Client or any other negligent entity or individual shall not exceed the percentage share that NES' negligence bears to the total negligence of NES, the Client, and all other negligent entities and individuals.

E. By acceptance of this Agreement, it is agreed that NES has permission to go on site and can perform any reasonable and necessary investigation in the course of completing the services described in

this agreement. Client is solely responsible for site security and for obtaining permission from any affected third-party property owners for use of their lands.

F. The work performed by NES is the confidential property of the client and will not be released to any other party without the Client's permission.

G. All regulatory determinations are subject to review and concurrence by the Wisconsin Department of Natural Resources and/or the U.S. Corps of Engineers, or other agency as appropriate.

H. This Agreement shall be administered and interpreted under the laws of the state of Wisconsin. Jurisdiction of litigation arising from the Agreement shall be in the state of Wisconsin. If any part of the Agreement is found to be in conflict with applicable laws, such part shall be inoperative, null and void insofar as it is in conflict with said laws, but the remainder of the Agreement shall be in full force and effect.

I. Upon execution of the Agreement, the services described herein shall begin as soon as possible and site investigation (if required) will be completed as weather and scheduling permit.

J. This Agreement must be executed by the Client within 30 days of the day and year first above written.

IN WITNESS WHEREOF, the parties hereto have made and executed this Agreement as of the day and year first written above and hereby authorize NES to initiate work on the project.

**ROBERT E. LEE & ASSOCIATES, INC.**

By: _____

JARED SCHMIDT
PRINCIPAL

**CITY OF GREEN BAY**

_____

AUTHORIZED REPRESENTATIVE

Date: _____

**NES ECOLOGICAL SERVICES**

By: _____

JAMES HAVEL
DIVISION MANAGER

DATE: FEBRUARY 17, 2023

Report to the
# Improvement and Service Committee of the City of Green Bay

| MEETING DATE | PREPARED BY |
| --- | --- |
| March 21, 2023 | |

## AGENDA ITEM # L.4

To approve the request by Department of Public Works to enter into a Memorandum of Understanding between the City of Green Bay and the University of Wisconsin – Green Bay to allow access to the Tank Farm Pond property (Parcels 6-18 and 6-29) for data collection and on-going research.

## BACKGROUND

## RECOMMENDATION

## FISCAL IMPACT

## ATTACHMENTS

1. Tank Farm 1
2. Tank Farm 2

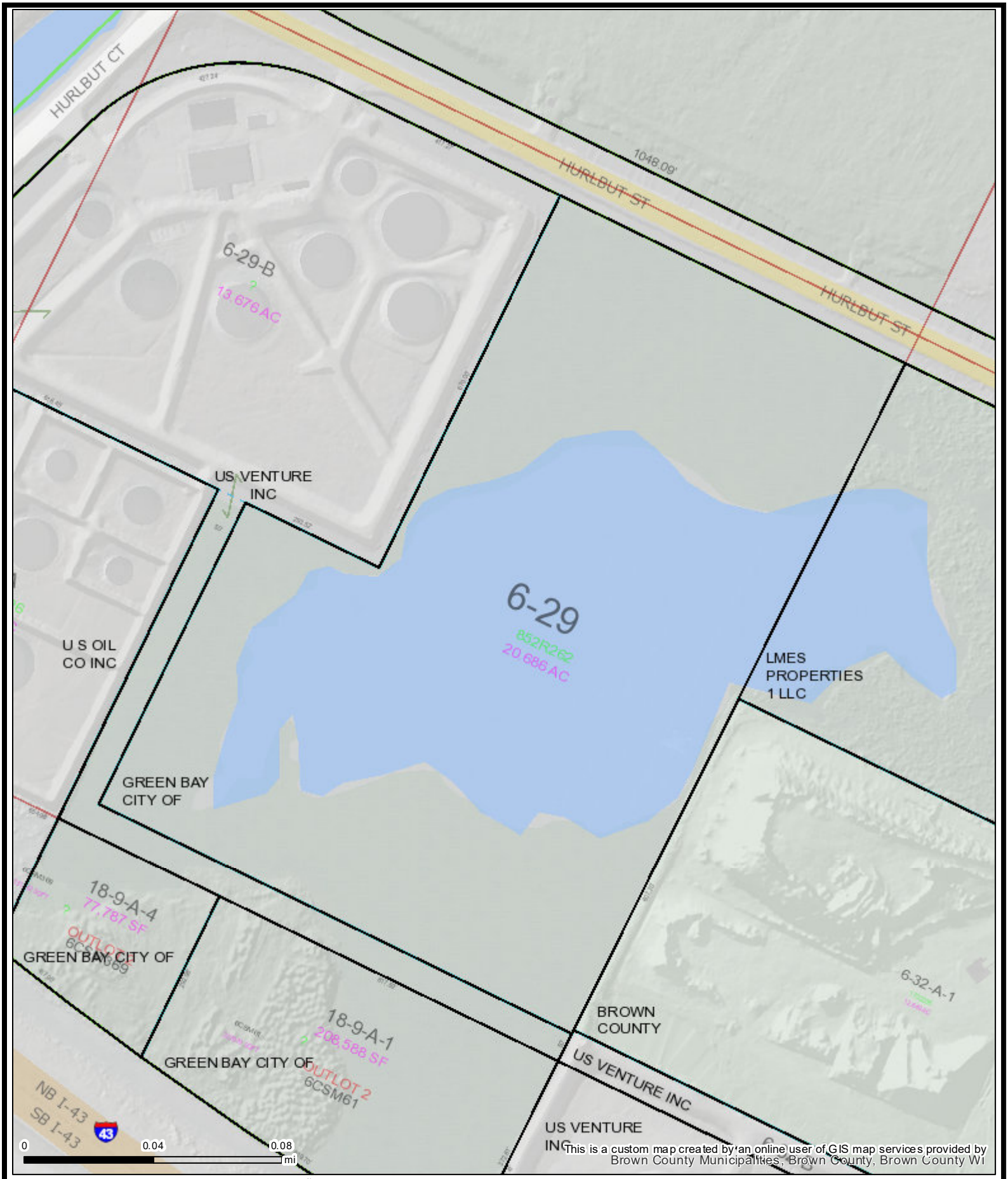


# Tank Farm Pond 1

Map printed on 3/9/2023

**1:2,400**

**1 inch = 200 feet***

1 inch = 0.0379 miles*

**original page size: 8.5"x11"*

*Appropriate format depends on zoom level*

**Parcel ownership key**

- Parcel Boundary
- Condominium
- Gap or Overlap

"hooks" indicate parcel ownership crosses a line

- Parcel line
- Right of Way line
- Meander line
- Lines between deeds or lots
- Historic Parcel Line
- Vacated Right of Way

A complete key (legend) is available at:
**tinyurl.com/BrownDogLegend**

Brown County Planning & Land Services

(920) 448-6480

www.browncountywi.gov

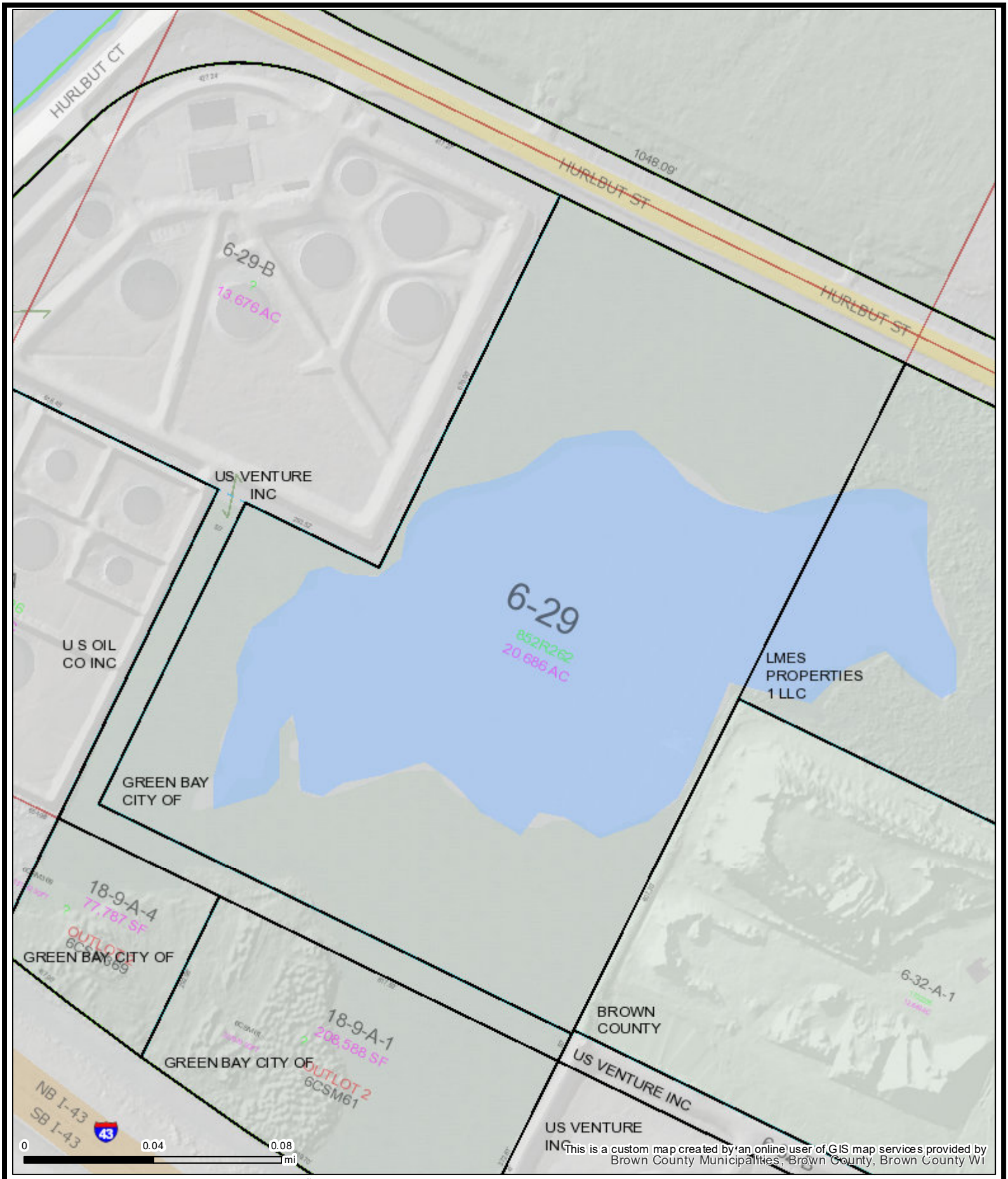


# Tank Farm Pond 1

Map printed on 3/9/2023

**1:2,400**

**1 inch = 200 feet***

1 inch = 0.0379 miles*

**original page size: 8.5"x11"*

*Appropriate format depends on zoom level*

**Parcel ownership key**

- Parcel Boundary
- Condominium
- Gap or Overlap

"hooks" indicate parcel ownership crosses a line

- Parcel line
- Right of Way line
- Meander line
- Lines between deeds or lots
- Historic Parcel Line
- Vacated Right of Way

A complete key (legend) is available at:
**tinyurl.com/BrownDogLegend**

Brown County Planning & Land Services

(920) 448-6480

www.browncountywi.gov

Report to the
# Improvement and Service Committee of the City of Green Bay

| MEETING DATE | PREPARED BY |
| --- | --- |
| March 21, 2023 | |

## AGENDA ITEM # L.5

To approve the request by Department of Public Works to purchase a replacement tractor for Closed Circuit Television (CCTV) inspection of sanitary and storm sewer facilities within the City.

## BACKGROUND

## RECOMMENDATION

## FISCAL IMPACT

## ATTACHMENTS

1. Aries Proposal S230222
2. Parts Quote
3. Sole Source-No Sub Approval Aries Tractor 2-24-23

REF QT32900

ARIES INDUSTRIES, INC.

Sourcewell Awarded Contract
Contract # 120721-ARS

550 Elizabeth St (262) 896-7205 ph (800) 234-7205 tf
Waukesha WI 53186 (262) 896-7099 fx

**QUOTE#** S230222

# QUOTATION

***Customer Information***

*Contact* **Reed Rondeau**
*Organization* **City of Green Bay**
*Sourcewell #* 25917
*Address* **1820 Mills Street**
*City* **Green Bay** *State* **WI** *Zip Code* **54302**
*Phone* **920-448-3000** *email* reed.rondeau@greenbaywi.gov

*Date* 2/22/2023
*Expiration* 3/24/2023
*Salesman* Greg Fry
*Terms* Net 30
*Delivery* typ 4-6 weeks
*FOB* Destination

| Item# | Qty | U/M | Part# | Description | Unit Price | Extended |
|---|---|---|---|---|---|---|
| | | | | ******Sourcewell Contract Pricing****** | | |
| A | 1 | ea | | TR3320 tractor with case only | $27,472.00 | $27,472.00 |

| | |
|---|---|
| Subtotal | |
| Shipping & Handling | |
| Taxes | |
| Other | |
| **TOTAL** | |

I accept the terms and conditions of this quotation

Name _____
Title _____
Signature _____

PO# _____

*Aries Industries Inc terms and conditions of sale for this quotation are available upon request*

Please visit our website: www.ariesindustries.com

Sourcewell
Awarded Contract
Contract # 120721-ARS

ARIES INDUSTRIES, INC.

**1 Aries TR3320 Pathfinder steerable self-propelled transporter for 6” to 15” lines, including:**

1 Tractor assembly with continuous duty drive motors
6 Rubber wheels, 3” diameter
1 Remotely-operated electric camera lifting mechanism
1 Fast-check pressure monitoring system
1 Rear viewing camera with LED lighting
1 512 Hz internal locating beacon
1 Integrated inclinometer system
1 Storage and transport case

**1 One year warranty, new components**

# Quotation

Solutions & Technology for a Greener Tomorrow

P.O. Box 356 - Johnson Creek, WI 53038
Phone: 888-699-2848 - Fax: 920-699-2847

***A Waste & Recycling Equipment Management Company***

**Quotation For:**

City of Green Bay- Public Works

City of Green Bay- Public Works
1820 Mills St
Green Bay, WI 54302

Attention To: Reed Rondeau

Make: Model:

Payment Terms : Due on Receipt

**Date :** 02/20/2023
**Quotation # :** 28243
**Customer ID:** 7,587
Store No. :
*Quotation valid until:* 3/2/2023
*Prepared by :* Jacqueline Fritz
Salesperson : Jacqueline Fritz
Serial No. :

**Comments or Special Instructions**

| Qty | PartNumber | Description | UnitPrice | Tax | LineTotal |
|---|---|---|---|---|---|
| 2.00 | 24487 | 24487 - Harness, Motor Pack, Drive Train, TR331X | $6,144.16 | No | $12,288.32 |
| 2.00 | 22855 | 22855 - Screw, Set 6-32 x 3/32 SS Cup | $1.04 | No | $2.08 |
| 2.00 | 19924 | 19924 - Washer, Thrust, TR3300 | $59.85 | No | $119.70 |
| 2.00 | 19203 | 19203 - Cam, Clutch, TR331X | $388.62 | No | $777.24 |
| 8.00 | 19926 | 19926 - Bearing, Thrust, TR3300 | $12.44 | No | $99.52 |
| 1.00 | 19268 | 19268 - Arm, Outer Camera Lift, Left, TR3310 | $430.06 | No | $430.06 |
| 1.00 | 19269 | 19269 - Arm, Outer Camera Lift, Right, TR3310 | $314.34 | No | $314.34 |
| 1.00 | 19206 | 19206 - Cover, Motor, TR331X | $470.45 | No | $470.45 |
| 8.00 | 16974 | 16974 - Bearing, Ball, 1/4 ID x 1/2 OD x 1/8 Wide, SS, ABEC-5 Open | $14.16 | No | $113.28 |
| 1.00 | 23809 | 23809 - PCA, Vicor 70V Power Supply, TR3310 | $1,797.90 | No | $1,797.90 |
| 2.00 | 15505 | 15505 - O-Ring, 14mm x 1mm Buna-N 70 Duro | $1.06 | No | $2.12 |
| 6.00 | 19923 | 19923 - Roller, Clutch, TR3300 | $60.22 | No | $361.32 |
| 2.00 | 19922 | 19922 - Cage, Clutch, TR3300 | $236.45 | No | $472.90 |
| 4.00 | 19925 | 19925 - Spring, Disc Wave | $1.92 | No | $7.68 |
| 2.00 | 19920 | 19920 - Drum, Clutch, TR3300 | $174.14 | No | $348.28 |
| 12.00 | 17157 | 17157 - Bearing, 1.00 I.D. x 1.375 O.D. x .1875 Wide, 440C SS Angular Contact | $211.98 | No | $2,543.76 |
| 1.00 | 19222 | 19222 - Gear, Main Drive, TR331X | $1,641.11 | No | $1,641.11 |
| 2.00 | 19205 | 19205 - Gear, 20T Modified, Drive Motor, TR331X | $383.70 | No | $767.40 |
| 1.00 | 23807 | 23807 - PCA, Motor Interconnect, TR3310 | $282.46 | No | $282.46 |
| 1.00 | 19199 | 19199 - Cap, Back, TR331X | $558.01 | No | $558.01 |
| 2.00 | 19200 | 19200 - Shaft, Drive, Splined, TR331X | $374.94 | No | $749.88 |

| Qty | PartNumber | Description | UnitPrice | Tax | LineTotal |
|---|---|---|---|---|---|
| 2.00 | 19927 | 19927 - Spacer, Housing, Clutch, TR3300 | $33.04 | No | $66.08 |
| 2.00 | 16925 | 16925 - Bearing, Ball .25 x .625 x .196, Open | $16.75 | No | $33.50 |
| 2.00 | 13751 | 13751 - Pin, Spring 3/32 OD x 3/8 18-8 SS | $1.06 | No | $2.12 |
| 4.00 | 17163 | 17163 - Bearing, Ball, 0.6875 OD x 0.250 ID x 0.3125 Wide, Double Sealed, Steel | $26.74 | No | $106.96 |
| 1.00 | 23773 | 23773 - PCA, Main, TR3310 | $2,252.76 | No | $2,252.76 |

NOTES :

| | |
|---|---|
| SUBTOTAL | $26,609.23 |
| SHIPPING | $0.00 |
| OTHER | $0.00 |
| TAX RATE | 0.000 |
| SALES TAX | $0.00 |
| TOTAL | $26,609.23 |

**THANK YOU FOR YOUR BUSINESS!**

Quotation approved by : _____

Date : _____

**City of Green Bay, Wisconsin**
**REQUEST FOR APPROVAL OF "NO SUBSTITUTE" PURCHASE SPECIFICATION**

**TO** : **Purchasing Division/Administrative Services** **DATE**: *02/17/23*

**FROM: Department/Division** *Public Works* **REQUISITION #**

**List "No Substitute" Item(s) here:**

*Areis TR3320 Pathfinder Tractor*

**Select One:**

☑ 1) One Time Purchase Estimated Cost: $ *$27,472*

☐ 2) Annual Commodity purchase: Estimated annual cost: $

☐ 3) Item may be purchased again: Indicate term: Estimated Annual Cost: $

Example: 1 year, indefinite, etc. Long term requests will be reevaluated periodically)

**We request approval of a "NO SUBSTITUTE" specification for the purchase of the subject item(s)**
**Check appropriate justification(s). Provide DETAILED explanation(s) below.**

☑ 1. Sole Source – The below signed has searched the market and verified that no comparable item is available.

☐ 2. Single Source – Although comparable items are available, THIS is the only brand/model that will work.

☐ 3. Item(s) is (are) only acceptable replacement part(s) known for _____ (Identify)

☐ 4. Continuity of design is overriding consideration (ex: playground equipment or street furniture)

☐ 5. Safety:

☐ 6. Other:

*Explanations shall contain sufficient information and justification for the items to be considered and approved as "NO SUBSTITUTE" items. Failure to do so will result in the request being denied and returned to the originator.

*Recommending Department Head will be available to defend said recommendation to the appropriate City Committee and/or Common Council.

**PLEASE EXPLAIN YOUR REASONS FOR THIS REQUEST** (additional info may be attached on a separate sheet):

*The Department of Public Works purchased an Aries main line sewer inspection camera system in 2019 for inspection and televising of the City's sanitary and storm water sewer systems. The tractor that the camera is secured to while inspecting the sewer pipes has experienced numerous break downs and after inspection of the worn internal components, it was discovered the tractor had reached the end of its useful service life. The Aries camera system and tractors are proprietary to Aries, no other cameras or tractors are compatible.*

*The City Requested quotes from the local Aries dealer JWR Inc. for the necessary parts (furnished only) to get the tractor back to reliable operation vs the cost of a new tractor. After review, it was determined the cost of the parts plus labor will exceed the price of a new tractor. Additionally, the new tractor will come with a 1-year warranty. The quote for the tractor was obtained from Sourcewell (competitively bid Co-Op) quote #S23022 and being sold through JWR.*

**Approvals:**

Requestor: _____ Date: _____

Department Head: _____ Date: _____

Purchasing Manager: Date:

Report to the
# Improvement and Service Committee of the City of Green Bay

| MEETING DATE | PREPARED BY |
| --- | --- |
| March 21, 2023 | |

## AGENDA ITEM # L.6

To approve the request by Department of Public Works to amend the Brown County Solid Waste Management Agreement for 2023 establishing a "Direct Haul Contract Rate" for waste hauled directly to the landfill by the City of Green Bay instead of hauling to the transfer station.

## BACKGROUND

## RECOMMENDATION

## FISCAL IMPACT

## ATTACHMENTS

1. Solid Waste Management Agreement Amendment 2023

# Amendment #1
# Solid Waste Management Services Agreement

This Amendment #1 to the 2021 Solid Waste Management Services Agreement (the "Agreement"), by and between Brown County, Wisconsin ("Brown County") and _____ ("Municipality") updates certain sections of the original Agreement in order to add a Direct Haul Contract Rate for material taken to the Brown County South landfill in 2023, update the definitions and clarify language in the original agreement.

The following paragraph is modified to clarify the responsibly of Brown County:

**WHEREAS**, pursuant to Brown County Code, § 12.01(4), Brown County *Solid Waste Board* has the legal responsibility to act as the policy making body for the Port & Resource Recovery Department and "shall keep abreast of the latest techniques, procedures and methods that may be developed in solid waste management," and therefore, Municipality can propose an emerging solid waste management technology concept for consideration at any meeting of the Brown County Solid Waste Board; and

**Section 1. Definitions** is amended to add the following definition:

F. "Direct Haul Contract Rate" means a Tipping Fee rate that is lower than the Gate Rate for material hauled directly to the Brown County South Landfill, as provided in Attachment #1.

**Section 1. Definitions is** updated to clarify the following definition:

K. "Landfill" means the designated BOW landfill facility in use during the period of this Contract which includes the Outagamie County *Northeast* landfill (and its *Northwest* expansion) and the Brown County South landfill which are subject to the BOW Agreement.

**Section 7. Operating Days and Hours** is modified to reflect normal hours of operation of the South Landfill.

<u>South Landfill</u>
Regular Hours:
Mon. - Fri. 7:30 am - ~~5~~4:00 pm
Sat. 7:30 am – 12:30 pm

IN WITNESS WHEREOF, the undersigned have set their hands and seals the day and year first above written.

Brown County Executive

_____

Brown County Port & Resource Recovery Director

_____

Municipality of

_____

_____
(Municipal Official)

_____
(Title)

# Attachment #1

This Attachment #1 is incorporated into and made a part of the Contract by this reference. The following Tipping Fees will be charged for disposal of solid waste in 2023:

| ***2023 Solid Waste Tipping Fee Rates*** | | | |
|---|---|---|---|
| | | **FEE** | **UNIT** |
| **Brown County Waste Transfer Station** | | | |
| | Preferred Contract Rate** | $52.25 | Per Ton |
| | Gate Rate | $58.00 | Per Ton |
| **Brown County South Landfill** | | | |
| | Direct Haul Contract Rate** | $43.00 | Per Ton |
| | Gate Rate | $53.00 | Per Ton |

***The Contract Rate and Direct Haul Contract Rate may be increased by more than the CPI for 2024 if the actual landfill costs based on audit are higher than projected.*

Solid Waste Management Services not performed pursuant to this Contract will be subject to the Gate Rate. Future Tipping Fees will be established by the Board under the terms of the Contract.

Report to the
# Improvement and Service Committee of the City of Green Bay

| MEETING DATE | PREPARED BY |
| --- | --- |
| March 21, 2023 | |

## AGENDA ITEM # L.7

To approve ordering the improvements constructed and levying the assessments for asphalt pavement for S. Maple Avenue from Ninth Street to North Termini.

## BACKGROUND

## RECOMMENDATION

## FISCAL IMPACT

## ATTACHMENTS

1. Levying Assessments for Asphalt Pavement Pic 1
2. Levying Assessments for Asphalt Pavement Pic 2
3. Levying Assessments for Asphalt Pavement Pic 3
4. Levying Assessments for Asphalt Pavement Pic 4

3/10/22 Existing Condition – Looking West

3/10/22 Existing Condition – Looking North towards Eighth Street

3/10/22 Existing Condition – Looking Northwest towards Eighth Street

3/10/22 Existing Condition – Looking South towards Ninth Street

Report to the
# Improvement and Service Committee of the City of Green Bay

| MEETING DATE | PREPARED BY |
| --- | --- |
| March 21, 2023 | |

## AGENDA ITEM # L.8

To hold the list of Department of Public Works projects to be included in the 2023 City of Green Bay Capital Improvement Plan until the next regularly scheduled Improvement and Services Committee meeting (held from the March 1, 2023 Improvement & Services meeting).

## BACKGROUND

## RECOMMENDATION

## FISCAL IMPACT

## ATTACHMENTS

1. 2023 CIP - 07-25-22_FirstDraft_I&S_03-01-23

# DEPARTMENT OF PUBLIC WORKS
# 2023 CAPITAL IMPROVEMENTS PROGRAM

***Draft - 03/01/2023***

# DEPARTMENT OF PUBLIC WORKS
# 2023 CAPITAL IMPROVEMENTS PROGRAM

*As of 03-01-23*

| | | | | PAVEMENTS | | | STORM SEWER | | SANITARY SEWER | |
|---|---|---|---|---|---|---|---|---|---|---|
| STREET | FROM | TO | LENGTH | TOTAL COST | CITY COST | RIGHT OF-WAY COST | TOTAL COST | CITY COST | TOTAL COST | CITY COST |
| **NEW SUBDIVISIONS-EAST SIDE** | | | | | | | | | | |
| RED SMITH DEVELOPMENT (KOS 167) | SCOTTWOOD | CHURCH | 2,500 | 1,000,000 | 0 | 0 | 940,000 | 0 | 630,000 | 0 |
| *SITKA HEIGHTS (3) | | | | | | | | | | |
| UNNAMED DRIVE | SITKA STREET | SITKA STREET | 1,420 | 285,000 | 0 | | 35,000 | 5,000 | 205,000 | 0 |
| UNNAMED COURT | UNNAMED DRIVE | CUL-DE-SAC 387' NORTH | 387 | 100,000 | 0 | | 60,000 | 0 | 55,000 | 0 |
| *GRANDVIEW PLACE (1) | | | | | | | | | | |
| ROCKY ARBOR TRAIL | ERIE ROAD | 1354' EAST | 1,354 | 464,000 | 0 | | 248,000 | 0 | 268,000 | 0 |
| *EXCALIBER PHASE 4 (3) | | | | | | | | | | |
| PAULA STREET | 400' EAST OF DURHAM | SUSSEX | 600 | 105,000 | 0 | | 70,000 | 0 | 65,000 | 0 |
| **NEW SUBDIVISIONS-WEST SIDE** | | | | | | | | | | |
| **NEW SUBDIVISIONS TOTAL:** | | | 6,261 | 1,954,000 | 0 | 0 | 1,353,000 | 5,000 | 1,223,000 | 0 |
| | | | 1.19 Miles | | | | | | | |

* PROJECT CARRIED OVER FROM PREVIOUS YEAR

(1) City design/build
(2) Developer design/ City build
(3) Developer design/build

# DEPARTMENT OF PUBLIC WORKS
## 2023 CAPITAL IMPROVEMENTS PROGRAM
*As of 03-01-23*

| | | | | PAVEMENTS | | | STORM SEWER | | SANITARY SEWER | |
|---|---|---|---|---|---|---|---|---|---|---|
| STREET | FROM | TO | LENGTH | TOTAL COST | CITY COST | RIGHT OF-WAY COST | TOTAL COST | CITY COST | TOTAL COST | CITY COST |
| **OTHER STREETS - WEST SIDE** | | | | | | | | | | |
| SCHOOL PLACE | 13TH | OAK STREET | 1,068 | 442,000 | 442,000 | | 400,000 | 400,000 | 265,000 | 265,000 |
| S MAPLE STREET | 9TH STREET | NORTH TERMINI | 930 | 462,000 | 462,000 | | 416,000 | 416,000 | 280,000 | 280,000 |
| SCHOOL PLACE | S ASHLAND AVENUE | WEST CUL-DE-SAC | 1,031 | 430,000 | 430,000 | | 550,000 | 550,000 | 260,000 | 260,000 |
| HOWARD STREET | S ASHLAND AVENUE | OAKLAND AVENUE | 354 | 150,000 | 150,000 | | 1,110,000 | 1,110,000 | 90,000 | 90,000 |
| OAKLAND AVENUE | HOWARD STREET | SEYMOUR COURT | 820 | 340,000 | 340,000 | | 540,000 | 540,000 | 205,000 | 205,000 |
| **OTHER STREETS - EAST SIDE** | | | | | | | | | | |
| BERNER STREET | N. IRWIN STREET | N WEBSTER AVENUE | 2,069 | 970,000 | 970,000 | | 875,000 | 875,000 | 585,000 | 585,000 |
| BERNER STREET CONSULTANT DESIGN | | | | 100,000 | 100,000 | | 25,000 | 25,000 | 25,000 | 25,000 |
| MANITOWOC RD( gb %) | GREENBRIER | E. TERMINI | 800 | 200,000 | 200,000 | | | | | |
| N IRWIN AVENUE | ST CLAIR STREET | NORTH TERMINI | 215 | 90,000 | 90,000 | | 80,000 | 80,000 | 55,000 | 55,000 |
| FINGER ROAD | SUPERIOR ROAD | CHALLENGER DRIVE | 1,178 | 490,000 | 490,000 | | 440,000 | 440,000 | 200,000 | 200,000 |
| *S. VAN BUREN | E. MASON STREET | STUART STREET | 1,425 | 535,000 | 535,000 | | 480,000 | 480,000 | 320,000 | 320,000 |

* PROJECT CARRIED OVER FROM PREVIOUS YEAR

| | | | | | | | | |
|---|---|---|---|---|---|---|---|---|
| **LOCAL STREETS TOTAL:** | 9,890 | 4,209,000 | 4,209,000 | 0 | 4,916,000 | 4,916,000 | 2,285,000 | 2,285,000 |
| | 1.87 Miles | | | | | | | |
| **2022 CIP SUBTOTAL:** | 16,151 | 6,163,000 | 4,209,000 | 0 | 6,269,000 | 4,921,000 | 3,508,000 | 2,285,000 |
| | 3.06 Miles | | | | | | | |

# DEPARTMENT OF PUBLIC WORKS
## 2023 CAPITAL IMPROVEMENTS PROGRAM
*As of 03-01-23*

| | | | | PAVEMENTS | | | STORM SEWER | | SANITARY SEWER | |
|---|---|---|---|---|---|---|---|---|---|---|
| STREET | FROM | TO | LENGTH | TOTAL COST | CITY COST | RIGHT OF-WAY COST | TOTAL COST | CITY COST | TOTAL COST | CITY COST |
| **NHS ROUTES - EAST SIDE** | | | | | | | | | | |
| **NHS ROUTES - WEST SIDE** | | | | | | | | | | |
| **STP ROUTES - EAST SIDE** | | | | | | | | | | |
| **STP ROUTES - WEST SIDE** | | | | | | | | | | |
| CTY EB ROUNDABOUT | | | | | 500,000 | | | 500,000 | | |
| MATHER STREET-DESIGN | GRAY STREET | LOCUST | | 442,000 | 90,000 | | | | | |
| *COUNTRY CLUB-DESIGN | W. MASON | INDIAN HILLS | 3,952 | 250,000 | 250,000 | 0 | | | | |
| **STP - NHS TOTAL:** | | | 3,952 | 692,000 | 840,000 | 0 | 0 | 500,000 | 0 | 0 |
| | | | 0.75 Miles | | | | | | | |
| **2021 CIP SUBTOTAL:** | | | 20,103 | 6,855,000 | 5,049,000 | 0 | 6,269,000 | 5,421,000 | 3,508,000 | 2,285,000 |
| | | | 3.81 Miles | | | | | | | |

* PROJECT CARRIED OVER FROM PREVIOUS YEAR

# DEPARTMENT OF PUBLIC WORKS
## 2023 CAPITAL IMPROVEMENTS PROGRAM
*As of 03-01-23*

| | | | | PAVEMENTS | | | STORM SEWER | | SANITARY SEWER | |
|---|---|---|---|---|---|---|---|---|---|---|
| STREET | FROM | TO | LENGTH | TOTAL COST | CITY COST | RIGHT OF-WAY COST | TOTAL COST | CITY COST | TOTAL COST | CITY COST |
| **OTHER PROJECTS** | | | | | | | | | | |
| *TRAFFIC SIGNAL REPAIRS 2021 | W MASON | HINKLE | | 250,000 | 250,000 | | | | | |
| *TRAFFIC SIGNAL REPAIRS 2021 | ASHLAND | DOUSMAN | | 250,000 | 250,000 | | | | | |
| *TRAFFIC SIGNAL REPAIRS 2022 | MAIN STREET | DECKNER AVENUE | | 250,000 | 250,000 | | | | | |
| *TRAFFIC SIGNAL REPAIRS 2022 | EAST MASON | ABRAMS | | 250,000 | 250,000 | | | | | |
| *HURON ROAD SIDEWALK | HUMBOLDT | N. TO HIGHWAY RAMPS | | 300,000 | 275,000 | | | | | |
| *CITY WIDE SURVEY MONUMENTS | CITYWIDE | | | 217,000 | 217,000 | | 217,000 | 217,000 | 217,000 | 217,000 |
| **BRIDGE REPAIRS** | | | | | | | | | | |
| GENERAL BRIDGE MAINTENANCE | CITYWIDE | | | 200,000 | 200,000 | | | | | |
| CONCRETE DECK REPAIRS | MISC BRIDGES | | | 175,000 | 175,000 | | | | | |
| BRIDGE DECK SILANE SEALANT | MONROE, EAST RIVER, TAYLOR STREET | | | 10,000 | 10,000 | | | | | |
| PAINTING, STEEL, BEARINGS | BAIRD OVER EAST RIVER | ROBINSON AVE PED BRIDGE | | 360,000 | 360,000 | | | | | |
| *ATKINSON DR. PAINTING GIRDER ENDS/BEARINGS | | | | 260,000 | 260,000 | | | | | |
| HENRY STREET OVER BAIRD CREEK | DESIGN OVERLAY | | | 140,000 | 140,000 | | | | | |
| LARSEN RD BRIDGE | DESIGN | | | 242,000 | 30,000 | | | | | |
| BRIDGE SCOUR/IN STREAM WORK | MOON VALLEY, TAYLOR STREET | | | 290,000 | 290,000 | | | | | |
| W. MASON OVER BEAVER DAM CREEK | BRIDGE CONSTRUCTION | | | 61,000 | 0 | | | | | |
| MAIN STREET BRIDGE AT FOX RIVER | BRIDGE REPAIRS/BRIDGETENDER BUILDING/HYDRAULIC SYSTEM EAST SIDE | | | 1,100,000 | 1,100,000 | | | | | |
| *MAIN STREET BRIDGE AT FOX RIVER | HYDRAULIC DESIGN | | | 150,000 | 150,000 | | | | | |
| BRIDGE INSPECTION | REQUIRED ANNUAL INSPECTIONS | | | 20,000 | 20,000 | | | | | |
| CHANTEL ST. BRIDGE OVER BEAVER DAM CRE | BRIDGE CONSTRUCTION | | | 600,000 | 120,000 | | | | | |
| MAIN STREET @ EAST RIVER | EXPANSION JOINT RECONSTRUCTION | | | 375,000 | 375,000 | | | | | |
| **ANNUAL PROJECTS:** | | | | | | | | | | |
| ASPHALT RESURFACING - LOCAL STREETS | | | | 2,600,000 | 2,600,000 | | | | | |
| PAVEMENT REPAIRS - RESURFACING PROGRAM | | | | 750,000 | 750,000 | | | | | |
| PAVEMENT REPAIRS - ASPHALT PATCHING/SPRAY POTHOLE PATCHING | | | | 60,000 | 60,000 | | | | | |
| CONCRETE PAVEMENT REPAIRS - CITYWIDE | | | | 550,000 | 550,000 | | | | | |
| MUDJACKING | | | | 40,000 | 40,000 | | | | | |
| SIDEWALKS - NEW/REPLACEMENT | | | | 360,000 | 150,000 | | | | | |
| SIDEWALKS-CITYWIDE REPLACEMENT | | | | 720,000 | 320,000 | | | | | |
| * PROJECT CARRIED OVER FROM PREVIOUS YEAR | | | | | | | | | | |
| | | **OTHER PROJECTS TOTAL:** | | 10,580,000 | 9,192,000 | 0 | 217,000 | 217,000 | 217,000 | 217,000 |
| | | **PAVEMENT SUBTOTAL:** | | 17,435,000 | 14,241,000 | | | | | |
| | | **RIGHT-OF-WAY COST:** | | 0 | 0 | | | | | |
| | | **TOTAL PAVEMENT COST:** | **20,103** | **17,435,000** | **14,241,000** | | **6,486,000** | **5,638,000** | **3,725,000** | **2,502,000** |
| | | | 3.81 Miles | | | | | | | |

# DEPARTMENT OF PUBLIC WORKS
## 2023 CAPITAL IMPROVEMENTS PROGRAM
*As of 03-01-23*

| | | | | PAVEMENTS | | | STORM SEWER | | SANITARY SEWER | |
|---|---|---|---|---|---|---|---|---|---|---|
| STREET | FROM | TO | LENGTH | TOTAL COST | CITY COST | RIGHT OF-WAY COST | TOTAL COST | CITY COST | TOTAL COST | CITY COST |
| **SEWER PROJECTS** | | | | | | | | | | |
| *GROVE STREET SIPHON REPLACEMENT | | | | | | | | | 2,000,000 | 2,000,000 |
| *INFLOW & INFILTRATION REDUCTION PROGRAM | | | | | | | | | 1,000,000 | 1,000,000 |
| **STORM WATER MANAGEMENT** | | | | | | | | | | |
| SEYMOUR PARK STORMWATER POND-WEST | | | | | | | 3,000,000 | 3,000,000 | | |
| RAIN BARREL/RAIN GARDENS | | | | | | | 100,000 | 100,000 | | |
| *SEYMOUR PARK STORMWATER POND-EAST | | | | | | | 1,000,000 | 1,000,000 | | |
| *MAIN ST FLOOD PROJECT-DESIGN | | | | | | | 100,000 | 100,000 | | |
| SMOKE TESTING/ I&I INVESTIGATION | | | | | | | | | 50,000 | 50,000 |
| STORM WATER FACILITY VEGETATION MANAGEMENT - 2023 | | | | | | | 75,000 | 75,000 | | |
| *STREET SWEEPER DEWATERING BASINS | | | | | | | 70,000 | 70,000 | | |
| *GRANDVIEW STORMWATER FACILITY | | | | | | | 1,500,000 | 0 | | |
| BARINA CREEK DREDGING | | | | | | | 400,000 | 400,000 | | |
| \ | | | | | | | | | | |
| | | | | | | | 0 | 0 | | |
| **ANNUAL PROJECTS:** | | | | | | | | | | |
| SEWER REPAIRS - CITYWIDE | | | | | | | 400,000 | 400,000 | 150,000 | 150,000 |
| TV INSPECTION OF SEWERS (2021) | | | | | | | 90,000 | 90,000 | 75,000 | 75,000 |
| SEWER REHABILITATION - RESURFACING PROGRAM | | | | | | | 900,000 | 900,000 | 600,000 | 600,000 |
| MINI-STORM SEWERS - CITYWIDE | | | | | | | 650,000 | 650,000 | | |
| ROOT TREATMENT - CITYWIDE | | | | | | | | | 70,000 | 70,000 |
| CHRONIC SEWER REPAIRS - CITYWIDE | | | | | | | | | 1,000,000 | 1,000,000 |
| **MISC. SEWER PROJECTS TOTAL:** | | | | | | 0 | 8,285,000 | 6,785,000 | 4,945,000 | 4,945,000 |
| **TOTAL SEWER COSTS:** | | | | | | | **14,771,000** | **12,423,000** | **8,670,000** | **7,447,000** |

* PROJECT CARRIED OVER FROM PREVIOUS YEAR

# DEPARTMENT OF PUBLIC WORKS
## 2023 CAPITAL IMPROVEMENTS PROGRAM

*As of 03-01-23*

| | | | | PAVEMENTS | | | STORM SEWER | | SANITARY SEWER | |
|---|---|---|---|---|---|---|---|---|---|---|
| STREET | FROM | TO | LENGTH | TOTAL COST | CITY COST | RIGHT OF-WAY COST | TOTAL COST | CITY COST | TOTAL COST | CITY COST |
| **TIF #5** | | | | | | | | | | |
| *SHIPYARD DEVELOPMENT | | | | | | | | | | |
| ARNDT STREET | BROADWAY | PEARL | 268 | 110000 | 110000 | | 100000 | 100000 | 75000 | 75000 |
| ARNDT STREET | PEARL | EAST TERMINI | 294 | 110000 | 110000 | | 100000 | 100000 | 70000 | 70000 |
| BRIDGE STREET | BROADWAY | EAST TERMINI | 700 | 270,000 | 270,000 | | 240,000 | 240,000 | 160,000 | 160,000 |
| PEARL STREET | WALNUT | SOUTH TERMINI | 1,467 | 560,000 | 560,000 | | 500,000 | 500,000 | 350,000 | 350,000 |
| | | | **TOTAL TIF #5** | | 2,645,000 | | | | | |
| **TIF #7** | | | | | | | | | | |
| *LEGENDS DISTRICT SIDEWALKS | | | | 1,200,000 | 1,200,000 | | | | | |
| | | | **TOTAL TIF #7** | | 1,200,000 | | | | | |

* PROJECT CARRIED OVER FROM PREVIOUS YEAR

Report to the
# Improvement and Service Committee of the City of Green Bay

| MEETING DATE | PREPARED BY |
| --- | --- |
| March 21, 2023 | |

## AGENDA ITEM # L.9

To approve the award of the contract PAVEMENT 1-23 S. VAN BUREN STREET RECONSTRUCTION to Peters Concrete Company in the amount of $1,388,022.95.

## BACKGROUND

## RECOMMENDATION

## FISCAL IMPACT

## ATTACHMENTS

1. QuestCDN_Project Bid Results - PAVEMENT 1-23 S. VAN BUREN STREET RECONSTRUCTION

# PAVEMENT 1-23 S. VAN BUREN STREET RECONSTRUCTION

**Quest Number: 8396625**

**Closing Date: Tue, 03/07/2023 02:00 PM CST**
**Posting Type: Construction Project**

| | |
|---|---|
| **Owner Name:** | Green Bay WI, City of |
| **Owner Contact:** | Steven Grenier, P.E. |
| **Owner Phone:** | 920-448-3100 |
| **Solicitor Name:** | Green Bay WI, City of |
| **Contact:** | CHUCK YANG |
| **Email:** | CHUCK.YANG@GREENBAYWI.GOV |
| **Phone:** | 920-448-3371 |
| **Award Date:** | |
| **Comments:** | |
| **Award Status:** | Pending |
| **Letting Bid Tabulation:** | View on vBid |

| Company | Contact | Phone | E-mail | Amount | Awarded | Comment |
|---|---|---|---|---|---|---|
| Peters Concrete Company | Duke Peters | 920-494-3700 | quote@petersconcrete.com | $ 1,388,022.95 | | |
| Jossart Brothers, Inc. | Jason Hermsen | 920-339-8500 | jasonh@jossartbrothers.com | $ 1,456,844.25 | | |
| DE GROOT, INC. | MARK DE GROOT | 920-866-2348 | mark@degrootinc.com | $ 1,511,620.53 | | |
| Dorner Inc. | Tina Aschenbrenner | 920-845-2442 | tina.asch@dornerinc.com | $ 1,614,767.00 | | |
| PTS Contractors, Inc | Jeannie Petasek | 920-468-5217 | JPetasek@PTSContractors.net | $ 1,618,860.00 | | |

Report to the
# Improvement and Service Committee of the City of Green Bay

| MEETING DATE | PREPARED BY |
| --- | --- |
| March 21, 2023 | |

## AGENDA ITEM # L.10

To approve the award of the contract PAVEMENT 2-23 HURON ROAD SIDEWALK ADDITION to Peters Concrete Company in the amount of $299,226.20.

## BACKGROUND

## RECOMMENDATION

## FISCAL IMPACT

## ATTACHMENTS

1. QuestCDN_Project Bid Results - PAVEMENT 2-23

# PAVEMENT 2-23 HURON ROAD SIDEWALK ADDITION

**Quest Number: 8397678**

**Closing Date: Tue, 03/07/2023 02:00 PM CST**
**Posting Type: Construction Project**

| | |
|---|---|
| **Owner Name:** | Green Bay WI, City of |
| **Owner Contact:** | Steven Grenier, P.E. |
| **Owner Phone:** | 920-448-3100 |
| **Solicitor Name:** | Green Bay WI, City of |
| **Contact:** | MATT WOICEK |
| **Email:** | MATT.WOICEK@GREENBAYWI.GOV |
| **Phone:** | 920-448-3100 |
| **Award Date:** | |
| **Comments:** | |
| **Award Status:** | Pending |
| **Letting Bid Tabulation:** | View on vBid |

| Company | Contact | Phone | E-mail | Amount | Awarded | Comment |
|---|---|---|---|---|---|---|
| Peters Concrete Company | Duke Peters | 920-494-3700 | quote@petersconcrete.com | $ 299,226.20 | | |
| Sommers Construction Co., Inc. | Dave McKewin | 920-986-3301 | dave@sommersconst.com | $ 326,231.40 | | |
| Highway Landscapers, Inc. | Tim Pagel | 920-759-1701 | tpagel@highway.email | $ 338,811.00 | | |

Report to the
# Improvement and Service Committee of the City of Green Bay

| MEETING DATE | PREPARED BY |
| --- | --- |
| March 21, 2023 | |

## AGENDA ITEM # L.11

To approve and accept the additional rights-of-way required for the reconstruction of School Place – Oak Street to 13th Avenue.

| Part of Tax Parcel # | Interest Required | Owner Name(s) | Amount |
| --- | --- | --- | --- |
| 3-660 | Fee | Donna M & Melissa M Corpus | $1,400 |
| 3-662 | Fee | Jackie Micolichek | $1,400 |

## BACKGROUND

## RECOMMENDATION

## FISCAL IMPACT

## ATTACHMENTS

1. Approval Deed - School Place

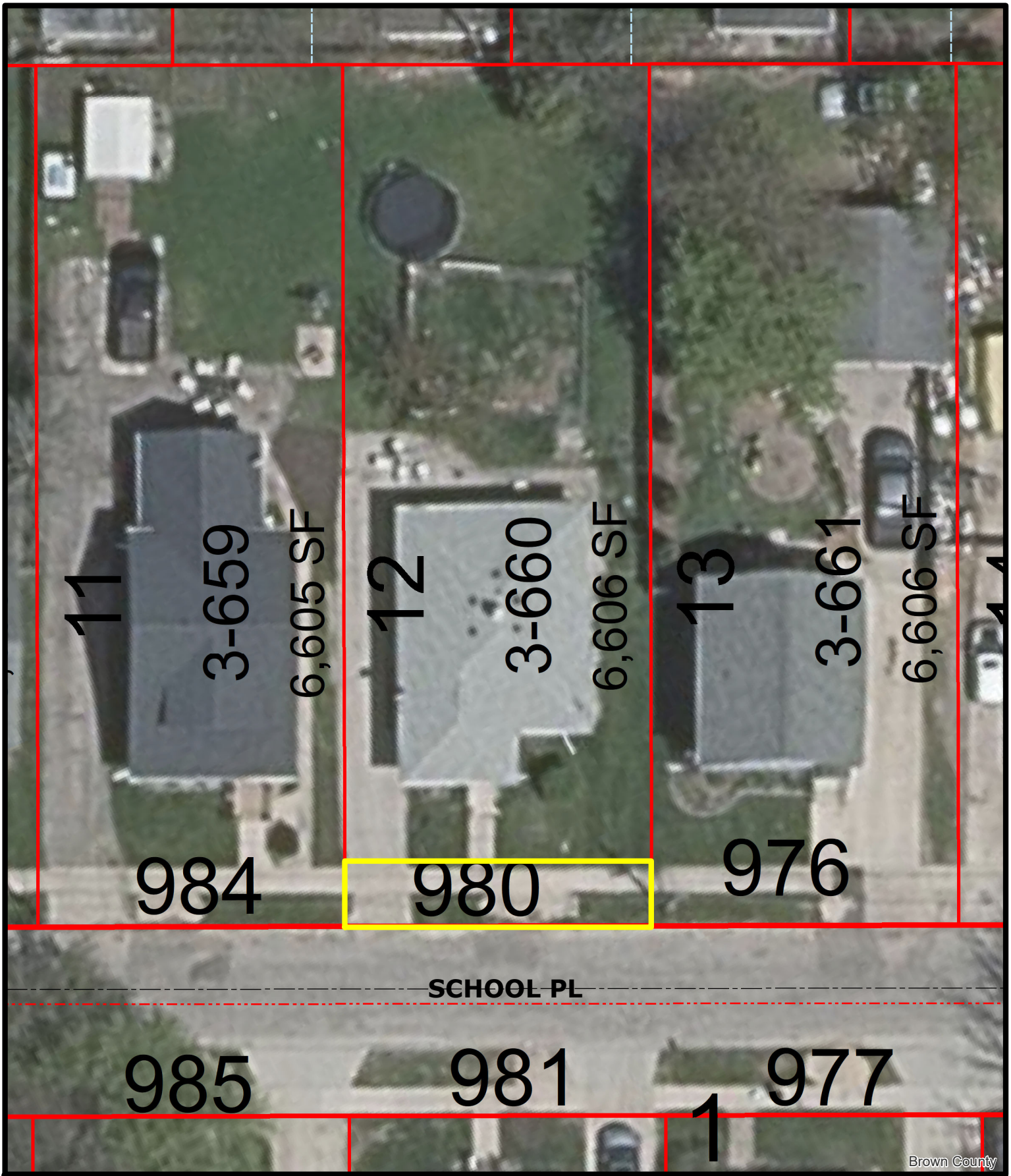


This is a compilation of records and data located in various City of Green Bay offices and is to be used for reference purposes only. The City of Green Bay is not responsible for any inaccuracies or unauthorized use of the information contained within. No warranties are implied.

City of Green Bay
Department of Public Works

Date: 3/8/2023

*Document Path: H:\GIS 8x11.mxd*

**WARRANTY DEED** **Document No.**

THIS INDENTURE, made by Donna M. Corpus and Melissa M. Corpus grantor, conveys and warrants the property described below to THE CITY OF GREEN BAY, a Wisconsin Municipal Corporation, grantee, for the sum of One Thousand Four Hundred and no/100 dollars ($1400.00).

Any person named in this deed may make an appeal from the amount of compensation within six months after the date of recording of this deed as set forth in s.32.05(2a) Wisconsin Statutes. For the purpose of any such appeal, the amount of compensation stated on the deed shall be treated as the award, and the date the deed is recorded shall be treated as the date of taking and the date of evaluation.

Return to:
City of Green Bay – Clerk
100 N. Jefferson Street
Green Bay, WI 54301-5026

Part of tax parcel number: 3-660
**EXEMPT S.77.25(2r)**

**Legal Description:**
The Southerly 10.0 feet of Lot Twelve (12), Cady's Addition, City of Green bay, Brown County, Wisconsin.

Donna M Corpus
(Signature)

3-7-2023
(Date)

Donna M. Corpus - Owner
(Print Name and Title above)

Melissa M. Corpus
(Signature)

3/7/23
(Date)

Melissa M. Corpus - Owner
(Print Name and Title above)

State of Wisconsin )
)SS.
3/7/23 County ) Brown
On the above date, this instrument was acknowledged before me by the named person(s) or officers.

(Signature, Notary Public, State of Wisconsin)

Brandon Vanbellinger
(Print or Type Name, Notary Public, State of Wisconsin)

11/17/26
(Date Commission Expires)

BRANDON VANBELLINGER NOTARY PUBLIC STATE OF WISCONSIN

THIS INSTRUMENT DRAFTED BY:
Thomas H. Giese – R/W Specialist

Project: School Place – Oak Street to 13th Avenue

Parcel Number: 10 / 3-660

I:\DeptData\PubWorks\Eng\CAD\ACAD\ROW\RWPlats\School Place - Oak Street to 13th Avenue\Fee Parcel Folders\Parcel 10 - D & M Corpus\P10 - D&M Corpus - Deed.doc

# NOMINAL PAYMENT PARCEL - WAIVER OF APPRAISAL
# RECOMMENDATION AND APPROVAL

| Owner | Area and Interest Required |
|---|---|
| Donna M Corpus & Melissa M Corpus | 485 Square Feet - Fee |

**Allocation**

| | | | | | | | |
|---|---|---|---|---|---|---|---|
| Land | 485 | Sq Ft | X | $ 2.50 | / Sq Ft | = | $ 1,212.50 |
| | | Sq Ft | X | | / Sq Ft | = | $ - |
| Permanent Limited Easement | | Sq Ft | X | | / Sq Ft | = | $ - |
| Temporary Limited Easement | | Sq Ft | X | | / Sq Ft | = | $ - |
| Fencing | | Sq Ft | X | | / Sq Ft | = | $ - |
| Landscaping | | Sq Ft | X | | / Sq Ft | = | $ - |
| Improvements | | Sq Ft | X | | / Sq Ft | = | $ - |
| Other | | Sq Ft | X | | / Sq Ft | = | $ - |
| | | | | | Total Damages | = | $ 1,212.50 |
| | | | | | Rounded To | = | $ 1,400.00 |

The undersigned owner, having been fully informed of the right to have the property appraised, and to receive just compensation based upon an appraisal, have decided to waive the right to an appraisal and agree to accept settlement in the above-stated amount as full payment for the parcel stated, subject to approval by the City of Green Bay.

The undersigned owner further state that the decision to waive the right of an appraisal was made without undue influences or coercive action of any nature.

It is intended that the instrument of conveyance will be executed upon presentation by the City of Green Bay agents or representatives.

X Donna M Corpus 3-7-2023
Donna M Corpus — Date

X Melissa M. Corpus 3/7/23
Melissa M Corpus — Date

## For Office Use Only

**APPROVED FOR: CITY OF GREEN BAY**

X
James M Brunette - Assistant Director of Public Works — Date

| Project ID | | Parcel No.: |
|---|---|---|
| School Place- Oak Street to 13th Avenue | | P10 / 3-660 |

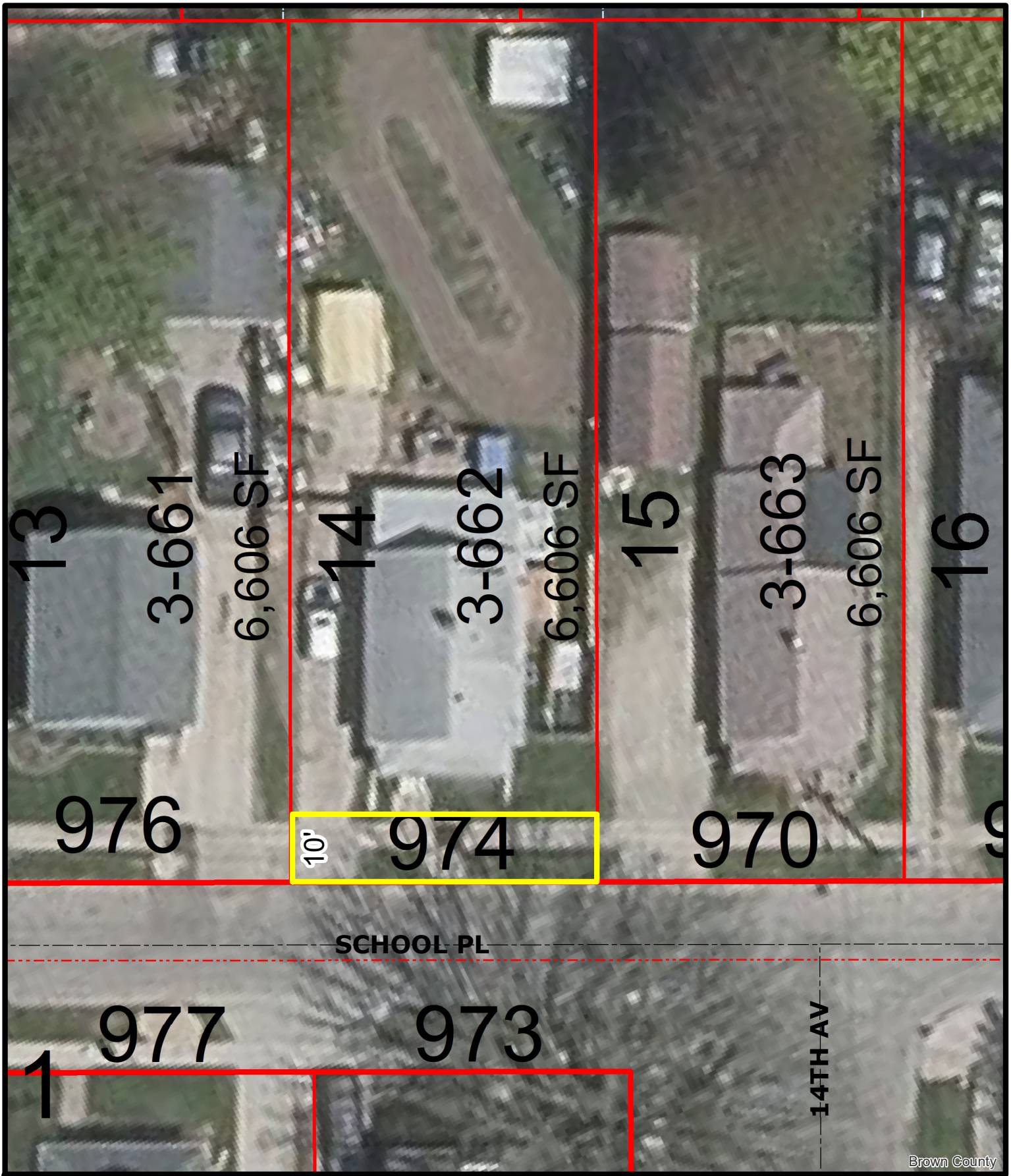


This is a compilation of records and data located in various City of Green Bay offices and is to be used for reference purposes only. The City of Green Bay is not responsible for any inaccuracies or unauthorized use of the information contained within. No warranties are implied.

City of Green Bay
Department of Public Works

Date: 3/7/2023

*Document Path: H:\GIS 8x11.mxd*

**WARRANTY DEED** **Document No.**

THIS INDENTURE, made by Jackie Steinhilber now known as Jackie Micolichek grantor, conveys and warrants the property described below to THE CITY OF GREEN BAY, a Wisconsin Municipal Corporation, grantee, for the sum of One Thousand Four Hundred and no/100 dollars ($1400.00).

Any person named in this deed may make an appeal from the amount of compensation within six months after the date of recording of this deed as set forth in s.32.05(2a) Wisconsin Statutes. For the purpose of any such appeal, the amount of compensation stated on the deed shall be treated as the award, and the date the deed is recorded shall be treated as the date of taking and the date of evaluation.

Return to:
City of Green Bay – Clerk
100 N. Jefferson Street
Green Bay, WI 54301-5026

Part of tax parcel number 3-662
**EXEMPT S.77.25(2r)**

**Legal Description:**

The Southerly 10.0 feet of Lot Fourteen (14), according to the recorded plat of Cady's Addition, City of Green Bay, West side of Fox River, Brown County, Wisconsin.

Jackie Micolichek
(Signature)

3-7-2023
(Date)

Jackie Steinhilber now known as Jackie Micolichek

State of Wisconsin )
)SS.
BROWN County )

On the above date, this instrument was acknowledged before me by the named person(s) or officers.

(Signature, Notary Public, State of Wisconsin)

E.J. NADOLSKI SPEARS
(Print or Type Name, Notary Public, State of Wisconsin)

01/04/2028
(Date Commission Expires)

NADOLSKI SPEARS NOTARY PUBLIC STATE OF WISCONSIN

THIS INSTRUMENT DRAFTED BY:
Thomas H. Giese – R/W Specialist

Project: School Place – Oak Street to 13th Avenue

Parcel Number: 12 / 3-662

# NOMINAL PAYMENT PARCEL - WAIVER OF APPRAISAL
# RECOMMENDATION AND APPROVAL

| Owner | Area and Interest Required |
|---|---|
| Jackie Steinhilber | 485 Square Feet - Fee |

**Allocation**

| | | | | | | | | |
|---|---|---|---|---|---|---|---|---|
| Land | 485 | Sq Ft | X | $ 2.50 | / Sq Ft | = | $ | 1,212.50 |
| | | Sq Ft | X | | / Sq Ft | = | $ | - |
| Permanent Limited Easement | | Sq Ft | X | | / Sq Ft | = | $ | - |
| Temporary Limited Easement | | Sq Ft | X | | / Sq Ft | = | $ | - |
| Fencing | | Sq Ft | X | | / Sq Ft | = | $ | - |
| Landscaping | | Sq Ft | X | | / Sq Ft | = | $ | - |
| Improvements | | Sq Ft | X | | / Sq Ft | = | $ | - |
| Other | | Sq Ft | X | | / Sq Ft | = | $ | - |
| | | | | | Total Damages | = | $ | 1,212.50 |
| | | | | | Rounded To | = | $ | 1,400.00 |

The undersigned owner, having been fully informed of the right to have the property appraised, and to receive just compensation based upon an appraisal, have decided to waive the right to an appraisal and agree to accept settlement in the above-stated amount as full payment for the parcel stated, subject to approval by the City of Green Bay.

The undersigned owner further state that the decision to waive the right of an appraisal was made without undue influences or coercive action of any nature.

It is intended that the instrument of conveyance will be executed upon presentation by the City of Green Bay agents or representatives.

X

Jackie Steinhilber Date

## For Office Use Only

**APPROVED FOR: CITY OF GREEN BAY**

**X**

James M Brunette - Assistant Director of Public Works Date

| Project ID | | Parcel No.: |
|---|---|---|
| School Place- Oak Street to 13th Avenue | | P12 / 3-662 |

Report to the
# Improvement and Service Committee of the City of Green Bay

| MEETING DATE | PREPARED BY |
| --- | --- |
| March 21, 2023 | |

## AGENDA ITEM # L.12

To receive and place on file the actions taken by Department of Public Works.

A. Granting of Licenses

1. Sidewalk Builder

   a. Allied Concrete Construction Inc.
   b. Loch Construction Co., Inc.
   c. Three Corners Concrete LLC
   d. Verheyen Construction Co.

2. Underground Sprinkler System

   a. Roberts Quality Irrigation, LLC

## BACKGROUND

## RECOMMENDATION

## FISCAL IMPACT

## ATTACHMENTS

None

Report to the
# Protection and Policy Committee of the City of Green Bay

| MEETING DATE | PREPARED BY |
| --- | --- |
| March 21, 2023 | |

## AGENDA ITEM # M.1

To approve a change of agent to Sarah J. Thibodeau for Kwik Trip, Inc. (Kwik Trip 420) at 1712 E. Mason St.

## BACKGROUND

## RECOMMENDATION

## FISCAL IMPACT

## ATTACHMENTS

1. 3219_001

Report to the
# Protection and Policy Committee of the City of Green Bay

| MEETING DATE | PREPARED BY |
| --- | --- |
| March 21, 2023 | |

## AGENDA ITEM # M.2

To grant an application for a "Class A" Liquor and Class "A" Beer license for Sarpanch 3, Inc. at 1335 Main St. with a license premises description as "shelves, in coolers, behind cash counter," with the approval of the proper authorities (Currently licensed as ASN Petroleum).

## BACKGROUND

## RECOMMENDATION

## FISCAL IMPACT

## ATTACHMENTS

1. 1335 main st. application
2. Stipulation agreement .ROBINSONDA.558-20233981939930

Report to the
# Protection and Policy Committee of the City of Green Bay

| MEETING DATE | PREPARED BY |
| --- | --- |
| March 21, 2023 | |

## AGENDA ITEM # M.3

To grant an application for a "Class A" Liquor and Class "A" Beer license for Oasis Enterprises LLC at 612 S. Military Ave. with a license premises description as "BEHIND THE COUNTER, SHELVES, BACKOFFICE," with the approval of the proper authorities (Currently licensed with a Class "A" Beer license as Ran-di Enterprises LLC).

## BACKGROUND

## RECOMMENDATION

## FISCAL IMPACT

## ATTACHMENTS

1. surrender-612 s military
2. application_612 S military
3. Stipulation agreement .ROBINSONDA.558-20233981550355

Report to the
# Protection and Policy Committee of the City of Green Bay

| MEETING DATE | PREPARED BY |
| --- | --- |
| March 21, 2023 | |

## AGENDA ITEM # M.4

To deny the appeal by Gregory and Jennifer Van Den Nelzen, 3486 Yorkshire Rd, regarding Building Inspector ORDER 22-1588-106, Case #132019, issued November 4, 2022 (staff confirmed they will not require the property owner to do additional work regarding this water issue if the work under the order is completed).

## BACKGROUND

## RECOMMENDATION

## FISCAL IMPACT

## ATTACHMENTS

1. 3486 Yorkshire Rd Violation Appeal_Policy and Protection Committee
2. Attachment A_Violation Notice Nov 2022
3. Attachment B_Violation Notice_updated Feb 2023
4. Attachment C_Complaint 2021
5. PP Meeting - 3486 YORKSHIRE DR Packet

**SUMMARY**

-In Fall 2020 we had an inground pool professionally installed by Pool Works Inc in the backyard of our home at 3486 Yorkshire Rd. We worked with the City of Green Bay to pull all of the necessary permits (for both the pool and the fence) and the project was inspected and approved multiple times throughout the process. Upon completion of the pool installation Pool Works hauled away the fill that had been excavated and did a rough grade of our property. We then had a fence installed around the perimeter of our property (in keeping with municipal code pertaining to the installation of a pool), taking care to not change the elevation at the property line so as to avoid any stormwater runoff issues. We brought in 20 yards of topsoil which was spread across our entire front and back yards so that we could plant grass (Municipal Code indicates that a permit is required if 100 yards of dirt or more is brought in). This amounted to approximately 1" of topsoil once distributed.

-On 11/8/2022 (two years after the installation of our pool), we received a letter from the City indicating we had violated municipal code (*Attachment A*) and accusing us of intentionally draining stormwater onto the neighboring property to the south with no attempts to mitigate. This is the first we had heard of any issues purportedly caused by our property and according to the letter we had until 12/4/2022 to install a mitigation system which was subsequently quoted at approximately $20,000 and would require us to drain all of the stormwater off of the neighboring property to the south through our yard and out to the storm sewer on our street. The property alleging these complaints regarding stormwater also made complaints against two additional neighboring properties that had constructed large sheds and raised the property at the back corner of their lots in 2021.

-The implication that we are contributing in a meaningful way to a stormwater issue on the neighboring property to the south is wholly untrue as we have taken extensive efforts to improve stormwater management on our property since purchasing it in 2019. When we purchased our property the backyard was primarily made up of dirt and dying trees. We have since planted six new healthy trees as well as planted grass across the backyard which significantly improves stormwater retention. We have also installed an inground pool which essentially acts as a retention pond. The implication that we have done nothing to control the water on our property is false. The neighboring lot lodging the complaints is the original homeowner on that property and when they built their home they graded their lot with a slope from front to back, which would naturally push their own stormwater to the back of their lot. As long as we have owned our home (since 2019), the neighboring lot to the South has had a large amount of pooled water at the back of their lot whenever there is significant rain. There has been no visible change to this that we have seen, so the suggestion that we have somehow now contributed to this problem and created a nuisance by installing a pool is untrue. Important to note is that according to Brown County GIS records, our property is at a lower elevation than the neighboring properties (see below).

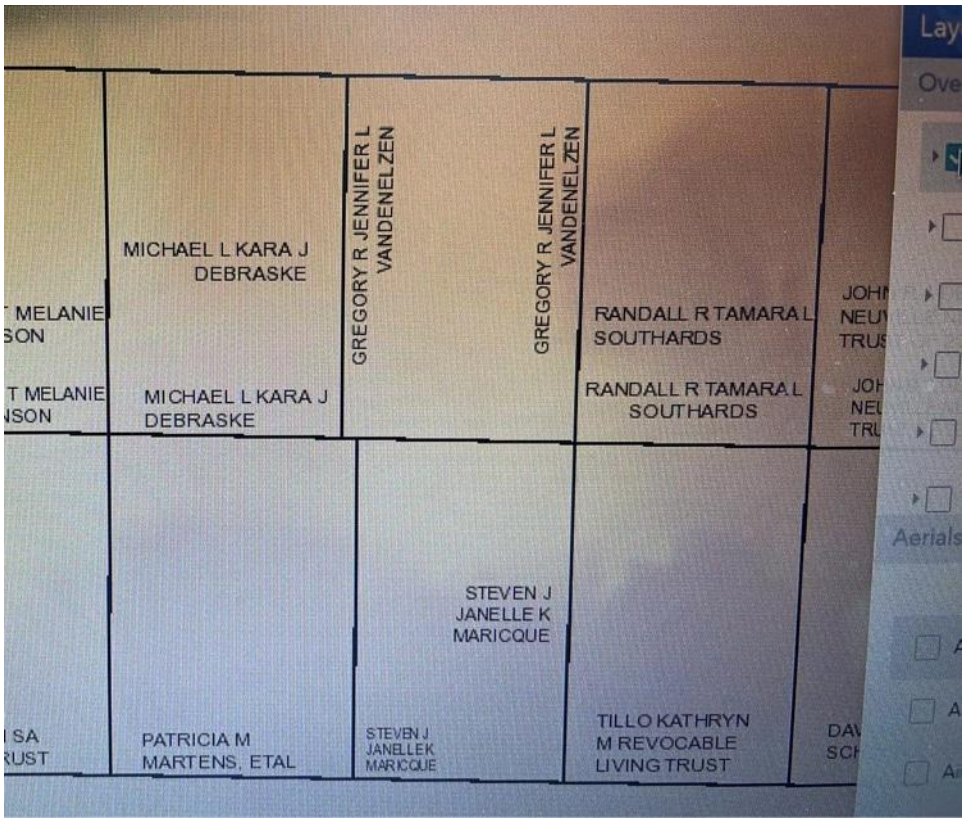


*Land elevation map from Brown County, 2020. The darker areas are higher elevation, lighter areas are lower elevation. The Maricque property is the one alleging that our property (Van Den Elzen), the Southards property and the Tillo property are intentionally draining stormwater onto their property and they have claimed that this has resulted in basement flooding and damage to their home. Of note, the Southards and the Tillo properties constructed raised sheds at the back corner of their properties in 2021 that borders the Maricque property. Our pool was completed in November 2020. The complaints from the Maricques to the City began in August of 2021 according to the records from the City.*

-We have been prompt and clear with our communication with the City, despite the slow response times and an unwillingness by the inspectors issuing the violation notice to provide any concrete evidence that we have violated any state or municipal code. Not only does correlation not prove causation, but the timeline of our pool construction and the start of the complaints do not even align.The legal standard indicates that the burden of proof lies with the City to provide clear and convincing evidence that we have violated Municipal Code. As we were not provided this proof, we filed an open records request with the City on 12/6/2022 and received an extension from the inspector's office until which date we received the results of this open records request. After an initial response to the open records request in January 2023 in which the inspector's office withheld the majority of the records, we have now received a more full response and would like to appeal the unfounded Violations Notice we received. The current deadline set by the inspector's office for us to take action is 2/24/2023 (*Attachment B*).

**DOCUMENTATION FROM CONVERSATIONS AND THE OPEN RECORDS REQUEST**

-When we initially received the Violation Notice letter on 11/8/2022 we reached out to the City by email that very same night as well as by phone the very next morning. We were not granted an initial meeting with the inspectors until a date after which the first deadline they had imposed on us had already passed. Also of importance to note is that according to the inspectors they had been working on this 'issue' for quite some time but waited until a full year and a half had passed before involving us in the conversation. They also admitted to requiring no proof from the complaining property to validate their allegations.

-In a conversation with City Inspector Erik Wasilewski on 11/28/2022 he indicated that his department had received 'near daily phone calls and emails' from the property to the south regarding stormwater issues created by our property and as well as against two neighboring properties. The results of our open records request indicated only two complaints had been made - one in August 2021 and one in May of 2022. The August 2021 complaint (*Attachment C*) shows that the complaint was closed out as a private matter with no action the City should take according to Municipal Code. Evidence of the May 2022 complaint was found in an email within the results of the open records request (below). Furthermore, in this conversation with Erik he admitted that if there was an issue it should have been brought to our attention in 2020 when our pool was constructed and inspected. He also used the exact words 'this is DPW's fault.' I am unclear exactly what he meant by that.

*From: Jessica Deal <Jessica.Deal@greenbaywi.gov>*
*Sent: Wednesday, May 4, 2022 11:24 AM*
*To: Scott Nelson <Scott.Nelson@greenbaywi.gov>; Jason Sladky <Jason.Sladky@greenbaywi.gov>; Erik Wasilewski <Erik.Wasilewski@greenbaywi.gov>*
*Subject: COMPLAINTS*
*Hi all,*
*Had a call from a Janelle has some issues with neighbors at 3486 & 3490 Yorkshire and 3495 Edinburgh regarding water discharging from down spouts and sump pumps and a construction site into her yard and causing issues. There are 2 open complaints for these issues 3489 Yorkshire and 3495 Edinburgh; 3486 Yorkshire has been closed out. If someone could please call her back to get an update or what the next step would be.*
*I am sending this to all of you as you all have at least one of the complaints under your name.*
*Thank you in advance!!*
*Jessica Deal*
*Administrative Clerk*
*City of Green Bay*
*Community & Economic Development Department*

-We met at City Hall on 12/1/2022 with City Inspector Erik Wasilewski and his supervisor Paul Van Calster. Paul indicated his belief was that our property was a minor contributor to the

stormwater issue on the neighboring property to the south and the other two neighboring properties that had constructed large sheds close to the property lines were the major contributors. We disagreed that our property was a contributor to stormwater runoff into the neighboring property to the south in a significant or unreasonable way. We did not concede that we would perform any mitigation measures. We did agree in good faith to have a contractor out to our property to assess the situation and provide an estimate for the work the City is ordering. Paul supplied the name of Champion Plumbing as a good contractor to use (we later found that the company is actually called Champion Trenching). Also of note during this meeting was Paul's assertion that the reason this is now an issue that must be addressed is that the neighboring property to the south reports they have sustained damage to their basement due to flooding. No proof of this damage has been provided. Paul indicated he believed that the stormwater pooling at the back of this property's yard was causing the water table to rise in that neighbor's yard specifically and then subsequently flooding their basement. He believed this was due to our property as well as the two other properties accused of draining water improperly onto the complaining property's yard. We disagreed with this assertion.

-On the recommendation of inspectors Paul and Erik from the City, I called Kevin at Champion Trenching on 12/1/2022 to obtain an estimate for the work ordered by the City. Kevin indicated he had been doing this type of work for 27 years and he had never heard of the City ordering a resident to connect into the storm sewer. Kevin sent one of his team members, Steve, out to our property to review the situation and provide an estimate. When Steve arrived shortly thereafter he was equally as surprised that the City was ordering us to do work as he did not see a drainage issue with our property and found that the most effective solution would be for the neighboring property to the south that made the complaints to install their own backyard inlet to drain their water to the storm sewer on their street.

-On 12/3/2022 I spoke with a geotechnical engineer and verified that the regional water table is 4 ft BGS, which means that basements in this neighborhood are in contact with water regardless of whether the water table were to rise due to stormwater. If the complaining property's basement flooded specifically due to the water table, it would be more likely that it was a faulty sump pump. Furthermore, the soil infiltration is low in this region, meaning that pooled stormwater cannot easily or quickly affect the water table. The City's assertion that stormwater pooling in the complaining property's backyard would cause their basement to flood is not supported by the evidence. It was the opinion of the geotechnical engineer that the reported basement flooding was more likely due to that property's roof drains, or a break in the water line, or as stated previously, due to a sump pump failure. The geotechnical engineer also pointed to the County's elevation map, which clearly shows our lot as the lowest amongst all lots neighboring ours. An additional point of consideration is that the installation of the pool on our property would actually aid in stormwater retention, not increase runoff, as it would act to pond/pool stormwater.

-On 12/6/2022 I received an email from Jason Sladky, DPW Plumbing Inspector from the City indicating they had reason to believe that there may be piping buried in our yard that is conveying water to the neighboring property to the south. I was surprised by this accusation but agreed to allow him to come to our property to dig for this alleged pipe.

-On 12/7/2022 Erik (City Inspector) and Jason (City Plumbing Inspector) came out to our property with a shovel and a probe to determine whether we had any illegally buried pipes. They concluded that we do not have any illegally buried pipes. Jason indicated he did not find any plumbing violations on our property and would be reporting this back to his supervisor (Paul Van Calster). Jason also indicated that he discovered yesterday when reviewing one of the other neighboring properties (the Tillo Property) that the had found the source of excess water being diverted onto the complaining property's yard.

-I sent multiple emails and left multiple voicemails for the Inspector's Office following the encounter on 12/7/2022 and finally on 12/16/2022 I received notice that the Inspector's Office would grant us a second 30-day extension while we awaited the response to our open records request. The Inspector's Office asserted that they still believed we were at fault despite the Plumbing Inspector not finding any plumbing code violations on our property.

-On 1/6/2023 I received a phone call from Erik Wasilewski at the City thanking me for my patience and updating me that he would like to speak with his supervisor, Paul Van Calster, after he returns from vacation to discuss whether the orders to us might be updated given their findings on the other two neighboring properties where sheds had been built. He does still believe that we raised our property and this resulted in some change of stormwater flow, but he acknowledged that 90% or more of the issue was being created by the other two properties in question, not ours. He also conceded that installing some type of inlet or drain on our property would not be necessary. He indicated the potential to still need to connect one of our downspouts into the storm sewer. I pushed back on this again saying that both contractors we reached out to reviewed the property and disagreed that stormwater mitigation on our property would address the stormwater issues on the complaining property to the south of us. Erik used the exact words 'you are right Jen' with regards to my assertion that we are not responsible for the drainage issues on the complaining property to the south. He also agreed that perhaps waiting to see how the mitigation efforts on the other two properties affected things might be a good approach. Erik thanked me again for my patience and said that he would speak to his supervisor Paul next week and call me back. He also indicated they will continue to issue 30-day extensions as needed with no penalty.

-On Thursday 1/12/2023 I sent an email to Erik as a follow up to our phone call the previous week, asking him for an update and also indicating that he should consider this email my formal request for an extension on the 1/18/2023 deadline. I did not receive a response to this email.

-On 1/18/203 I left another voicemail for Erik requesting an extension and to discuss this issue. In response I received an email from Erik with a copy of revised orders extending our deadline to pull a permit until 2/3/2023 and the deadline to conduct the requested work by 6/1/2023. I called and left another voicemail as well as followed up with an email to communicate to Erik that we will not pull a permit or conduct any work until we receive the requested records as the burden of proof is on the City to provide clear and convincing evidence that we are creating this problem and that the mitigation effort they are proposing would solve this problem.

-On 1/25/2023 I received an email from Deanna in the City Attorney's office with the formal response to my open records request from 12/6/2022. Attached to the email was a 42 page pdf filled with only emails I had sent to the City with regards to the orders we received, also at the end of the email were a few photographs dated August of 2021 of the neighboring backyard to the south issuing the complaints and our fenceline. There was not a single email complaining about our property within the response to my open records request. I called Deanna and stated my concern that information had been withheld as both Paul Van Calster and Erik Wasilewski from the City had indicated to us that they had received 'near daily phone calls and emails' complaining about our property over the last year and a half as well as had claimed to have photo and video evidence of water 'pouring off of our property' onto the neighboring property. Deanna indicated she would follow up with Erik and also do an email search of her own. She said there was no legal reason we shouldn't have access to these records if they do exist.

-On 2/1/2023 Received an email from Deanna in the City Attorney's office with a supplemental response to our open records request, this time it included copies of the original complaint report in 2021 as well as a variety of internal emails regarding our property. I emailed Erik at the City formally requesting an extension on the 2/3/2023 deadline to pull a permit as I now finally had a response to my open records request and needed time to review the information. Within the emails provided to me from the open records there is documentation of Paul Van Calster receiving pushback from other City employees that there are 'red flags' with his intention around our property. There is also no documentation of proof that stormwater is flowing off of our property onto the neighboring property to the south, despite Paul and Erik asserting in a previous meeting that they had photos and videos depicting this.

-On 2/6/2023 I received an email from the inspector Erik at the City granting us an extension until 2/24/2023 to submit a plan and pull a permit. He indicated that he spoke with his supervisor Paul Van Calster and this is the final extension they will grant. The deadline for work to be completed is 6/1/2023. We continue to maintain that we will not do any work on our property unless the City provides us with evidence that there is a code violation.

Community & Economic Development Department
100 North Jefferson Street · Room 608
Green Bay, Wisconsin 54301-5026
www.greenbaywi.gov

Phone 920.448.3300
Fax 920.448.3426

To: **GREGORY VANDENELZEN**

**3486 YORKSHIRE RD**
**GREEN BAY WI 54311**

November 04, 2022
Case #: **132019**
**(Initial Inspection 11/4/2022)**

Property Address: 3486 YORKSHIRE DR, 22-1588-106

Dear Property Owner:

An inspection was recently conducted at your property. Results of this inspection identified Municipal Ordinance violation(s) that need to be addressed by you, the property owner. Please note the "Correct By" date for correcting each item listed below. Unless I hear from you prior to the Correct By date(s), a re-inspection to check for compliance will be performed on or shortly after each date listed. The City greatly appreciates your effort and commitment to improving the quality of life in our neighborhoods. **Please contact me directly** if you have any questions regarding this notice. Again, thank you for maintaining your property in a code compliant condition.

**Erik Wasilewski, Building Inspector**
**(920) 448-3314 Erik.Wasilewski@greenbaywi.gov**

## Violations Notice:

| Order Number | Findings | Correct By | Inspector Comments |
|---|---|---|---|
| | Hello,<br><br>We are writing these orders as a result to the numerous complaints due to stormwater issues that have been created and the immediate need to get the issues resolved by the contributing properties involved. The construction that has taken place on your property as well as your neighbor's properties is causing a significant nuisance to another neighboring property. We have come up with a solution that will help resolve these outstanding issues and eliminate as much of the direct flow of water off of your property and on to your neighbors. We will require you to handle the stormwater on your own property as necessary through these included orders. Please read through your orders and call with any questions.<br><br>Thanks,<br>Erik | 12/4/2022 | |
| GBMC | RAIN GUTTERS LOCATED WITHIN 6' OF A PROPERTY | 12/4/2022 | |

| | | | |
|---|---|---|---|
| | LINE MAY NOT BE DIRECTED TOWARD THE NEIGHBORING PROPERTY | | |
| SPS 382.38-1 | DISCHARGE OF STORM WATER TO SURFACE AREA MAY NOT CREATE A NUISANCE | 12/4/2022 | |
| | Storm water and ground water discharges may not create a nuisance. You currently are contributing to water running off your property directly on to your neighbors properly without any attempt to control the water on your own property.<br>You must connect the rear yard downspouts around the house and connect to the front yard into the storm sewer pipes. You must also install a rear yard inlet at the lowest point of your backyard (southwest corner area allong fence line) to be connected into the storm sewer as well and properly grade area to drain. This rear yard inlet will be connected to another rear yard inlet in your neighbor's backyard to the south where the nuisance is located. See attached drawing. These need need and installed prior to the date shown. | 12/4/2022 | |
| 15.05(1) | BUILDING PERMIT REQUIRED. No person shall erect or construct any building or structure, or shall add to, enlarge, move, improve, alter, convert, extend, or demolish any building or structure or cause the same to be done, or shall commence any work covered by this chapter on any structure without first obtaining a building permit. Additional work requiring permits includes the construction of sheds, fences and replacement of or additions to driveways. Owner shall obtain a building permit. | 11/18/2022 | |

All cited violations must be corrected by the date(s) indicated above unless an extension of time is granted. A re-inspection fee in the amount of fifty dollars ($50) will be assessed for each re-inspection required after the above noted correction date or extension date passes and the property is still in non-compliance. In addition, each day that violations continue after this notice shall constitute a separate offense and may be subject to additional re-inspection fees and/or the issuance of Municipal Court citations.

*An owner of real property shall give notice to any purchaser that a notice has been issued concerning code violations, where the condition giving rise to the notice of violation has not been corrected.*

Erik D. Wasilewski

Erik Wasilewski, Building Inspector
(920) 448-3314,
Erik.Wasilewski@greenbaywi.gov

November 04, 2022
Date

STUB
UP
INLET
NEW
YARD
INLET
38-106
11,179 SF
Utilities
106
07
86.00'
3486

Community & Economic Development Department
100 North Jefferson Street • Room 608
Green Bay, Wisconsin 54301-5026
www.greenbaywi.gov

Phone 920.448.3300
Fax 920.448.3426

To: **GREGORY VANDENELZEN**

**3486 YORKSHIRE RD**
**GREEN BAY WI 54311**

February 06, 2023
Case #: **132019**
**(Initial Inspection 11/4/2022)**

Property Address: 3486 YORKSHIRE DR, 22-1588-106

Dear Property Owner:

An inspection was recently conducted at your property. Results of this inspection identified Municipal Ordinance violation(s) that need to be addressed by you, the property owner. Please note the "Correct By" date for correcting each item listed below. Unless I hear from you prior to the Correct By date(s), a re-inspection to check for compliance will be performed on or shortly after each date listed. The City greatly appreciates your effort and commitment to improving the quality of life in our neighborhoods. **Please contact me directly** if you have any questions regarding this notice. Again, thank you for maintaining your property in a code compliant condition.

**Erik Wasilewski, Building Inspector**
**(920) 448-3314 Erik.Wasilewski@greenbaywi.gov**

## Violations Notice:

| Order Number | Findings | Correct By | Inspector Comments |
|---|---|---|---|
| | Hello,<br><br>We are writing these orders as a result to the numerous complaints due to stormwater issues that have been created and the immediate need to get the issues resolved by the contributing properties involved. The construction that has taken place on your property as well as your neighbor's properties is causing a significant nuisance to another neighboring property. We have come up with a solution that will help resolve these outstanding issues and eliminate as much of the direct flow of water off of your property and on to your neighbors. We will require you to handle the stormwater on your own property as necessary through these included orders. Please read through your orders and call with any questions.<br><br>Thanks,<br>Erik | | |
| SPS | DISCHARGE OF STORM WATER TO SURFACE AREA | 11/4/2022 | |

| | | | |
|---|---|---|---|
| 382.38-1 | MAY NOT CREATE A NUISANCE | | |
| | Storm water and ground water discharges may not create a nuisance. You currently are contributing to water running off your property directly on to your neighbors properly without any attempt to control the water on your own property.<br>You must connect the rear yard southwest downspout around the house and connect to the front yard into the storm sewer pipes. | 6/1/2023 | |
| 15.05(1) | BUILDING PERMIT REQUIRED. No person shall erect or construct any building or structure, or shall add to, enlarge, move, improve, alter, convert, extend, or demolish any building or structure or cause the same to be done, or shall commence any work covered by this chapter on any structure without first obtaining a building permit. Additional work requiring permits includes the construction of sheds, fences and replacement of or additions to driveways. Owner shall obtain a building permit. | 2/24/2023 | |
| GBMC Sec. 8-360 | A plumbing permit is required prior to the installation of plumbing. There will be a permit required for the necessary work on this property | 2/24/2023 | |

All cited violations must be corrected by the date(s) indicated above unless an extension of time is granted. A re-inspection fee in the amount of seventy-five dollars ($75) will be assessed for each re-inspection required after the above noted correction date or extension date passes and the property is still in non-compliance. In addition, each day that violations continue after this notice shall constitute a separate offense and may be subject to additional re-inspection fees and/or the issuance of Municipal Court citations.

*An owner of real property shall give notice to any purchaser that a notice has been issued concerning code violations, where the condition giving rise to the notice of violation has not been corrected.*

Erik D. Wasilewski

Erik Wasilewski, Building Inspector
(920) 448-3314,
Erik.Wasilewski@greenbaywi.gov

February 06, 2023
Date

City of Green Bay
Inspection Division

# Complaint Report

Complaint No: 117694

Closed

**Address:** 3486 YORKSHIRE DR...22-1588-106

**Condition:**

**District:** City 1

**Description:** Because of construction by neighbors the flow of water has resulted in our property receiving all the runoff water and flooding the back yard of our property. The neighbors construction has changed the surrounding property to a higher elevation. Now all the water flows into our backyard.

**Div & Type:** Housing / Zoning...OTHER

**Dates:** Added: 8/12/2021, Received: 8/12/2021, 1st Insp: 8/17/2021, InitNotice: , Reinspection: , Complying: 8/17/2021

**Owner:** GREGORY VANDENELZEN, 3486 YORKSHIRE RD, GREEN BAY WI 54311

## Tenants

| Name | Street Address | City State Zip | Phone/Email |
|---|---|---|---|
| | | | |

## Assigned To

| User Id |
|---|
| ScottNe |

## Inspections

| Date | Type | Inspector | Action |
|---|---|---|---|
| 8/17/2021 | Admin | ScottNe | DISCUSSED MATTER WITH R CORMIER. STATES NOTHING WE CAN DO BY CODE SO IT IS PRIVATE MATTER. THERE IS A GREEN PEDISTAL IN THE REAR THAT GETS FLOOD FROM THIS ISSUE. |
| 8/17/2021 | Initial | ScottNe | INSPECTION. NEIGHBOR USED THE EXCAVATED MATERIAL FROM CONSTRUCTION OF AN IN GROUND POOLFOR FILL. THE BACKYARD HAS BEEN RAISED 4" FROM NEIGHBORING GRADE TO THE REAR. NOW THE LOW AREA AT 3485 EDINBURGH IS FLOODING. |
| 8/17/2021 | Cust. Service | ScottNe | PH CON W/ COMPL. EXPLAINED FINDINGS. CASE CLOSED. |

## Violations

| Ordinance | Findings | Comments | Complete By | Corrected On |
|---|---|---|---|---|
| | | | | |

## Tagged Vehicles

| Status | Order Date | Notified On | Comply By | Tow Date | Date Closed | License | Make | Model |
|---|---|---|---|---|---|---|---|---|
| | | | | | | | | |

# Information Packet from Inspections Division, Community and Economic Development Department, Feburary 24, 2023

## 3486 YORKSHIRE DR – SPS 382.38-1 -DISCHARGE OF STORM WATER TO SURFACE AREA MAY NOT CREATE A NUISANCE

**Key Points:**

- **Pool Permit issued on 9/8/2020**
- **Inspection states "POOL OK FENCE NOT UP" 1/12/2021**
- Complaint entered – Concrete slab base poured without a building permit - 4/26/2021 [3490 Yorkshire - Golf Simulator]
- Permit issued – No Site grading mentioned. 5/17/2021 [3495 Edingburgh Rd – Shed]
- Permit issued – No site grading mentioned. 6/22/2021 [3490 Yorkshire - Golf Simulator]
- **Complaint stated "Because of construction by neighbors the flow of water has resulted in our property receiving all the runoff water and flooding the back yard of our property. The neighbors construction has changed the surrounding property to a higher elevation. Now all the water flows into our backyard." 8/12/2021**
- **Inspection states "OK complete - Fence is up" 8/24/2021**
- Complaint entered 10/11/2021 [3495 Edingburgh Rd – Shed]
- Complaint entered- 3/15/2022 [3490 Yorkshire - Golf Simulator]
- **Created a Complaint that stated "Storm Water Nuisance"and sent out orders – 11/4/2022**
- Created a Complaint that stated "Storm Water Nuisance"and sent out orders – 11/4/2022 [3490 Yorkshire - Golf Simulator]
- Created a Complaint that stated "Storm Water Nuisance"and sent out orders – 11/4/2022 [3495 Edingburgh Rd – Shed]
- **Extended the Building Permit required due date multiple times. 11/15/2022, 12/19/2022, 1/13/2023, and 2/6/2023.**

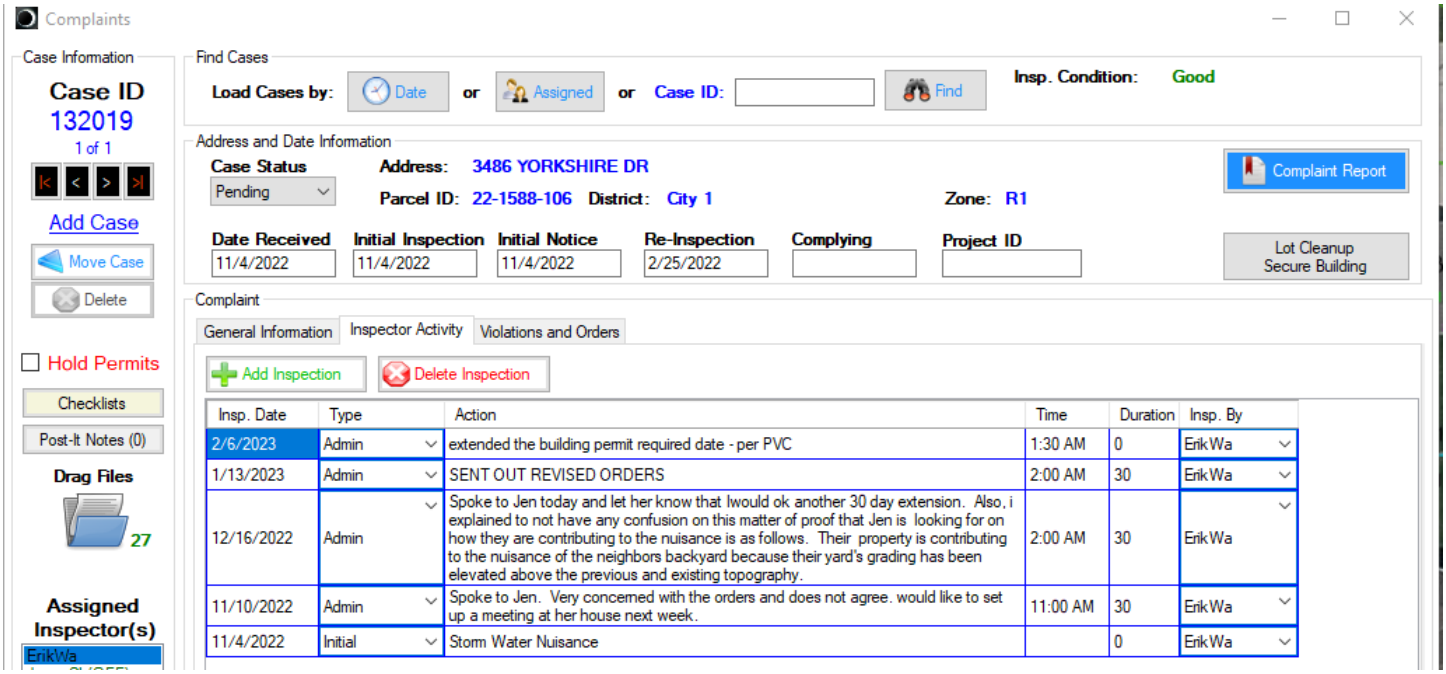

Complaints

Case Information

Case ID 132019

1 of 1

Add Case

Move Case

Delete

Hold Permits

Checklists

Post-It Notes (0)

Drag Files

27

Assigned Inspector(s)

EnkWa

JasonSl (OFF)

Avail. Inspectors:

<None>

Assign to Intern

Find Cases

Load Cases by: Date or Assigned or Case ID: Find

Insp. Condition: Good

Address and Date Information

Case Status: Pending

Address: 3486 YORKSHIRE DR

Parcel ID: 22-1588-106 District: City 1 Zone: R1

Complaint Report

Lot Cleanup Secure Building

| Date Received | Initial Inspection | Initial Notice | Re-Inspection | Complying | Project ID |
|---|---|---|---|---|---|
| 11/4/2022 | 11/4/2022 | 11/4/2022 | 2/25/2022 | | |

Complaint

General Information | Inspector Activity | Violations and Orders

Add Violation | Delete Violation | Insert Formal Ord. | Insert Custom Ord. | Send Orders | 5 | Envelopes

| Ordinance | Findings | Complete By | Corrected On |
|---|---|---|---|
| | Hello,<br><br>We are writing these orders as a result to the numerous complaints due to stormwater issues that have been created and the immediate need to get the issues resolved by the contributing properties involved. The construction that has taken place on your property as well as your neighbor's properties is causing a significant nuisance to another neighboring property. We have come up with a solution that will help resolve these outstanding issues and eliminate as much of the direct flow of water off of your property and on to your neighbors. We will require you to handle the stormwater on your own property as necessary through these included orders. Please read through your orders and call with any questions.<br><br>Thanks,<br>Erik | | |
| SPS 382.38-1 | DISCHARGE OF STORM WATER TO SURFACE AREA MAY NOT CREATE A NUISANCE | 11/4/2022 | |
| | Storm water and ground water discharges may not create a nuisance. You currently are contributing to water running off your property directly on to your neighbors properly without any attempt to control the water on your own property.<br>You must connect the rear yard southwest downspout around the house and connect to the front yard into the storm sewer pipes. | 6/1/2023 | |
| 15.05(1) | BUILDING PERMIT REQUIRED. No person shall erect or construct any building or structure, or shall add to, enlarge, move, improve, alter, convert, extend, or demolish any building or structure or cause the same to be done, or shall commence any work covered by this chapter on any structure without first obtaining a building permit. Additional work requiring permits includes the construction of sheds, fences and replacement of or additions to driveways. Owner shall obtain a building permit. | 2/24/2023 | |
| GBMC Sec. 8-360 | A plumbing permit is required prior to the installation of plumbing. There will be a permit required for the necessary work on this property | 2/24/2023 | |

## Authority

Muni Code 8-355 – adopts DSPS 382

SPS 382 – Discharge of storm water may not create a nuisance, see Table 382.38 footnote b

Muni Code 8 – 365(c) – address roof drains to not create a nuisance

Muni Code 24 – 5(4) – standing water is a nuisance

Muni Code 36-38 – sequential grading plans must comply with this code

Muni Code 36-38(13) – address the need for site plans to address grading when it is being altered

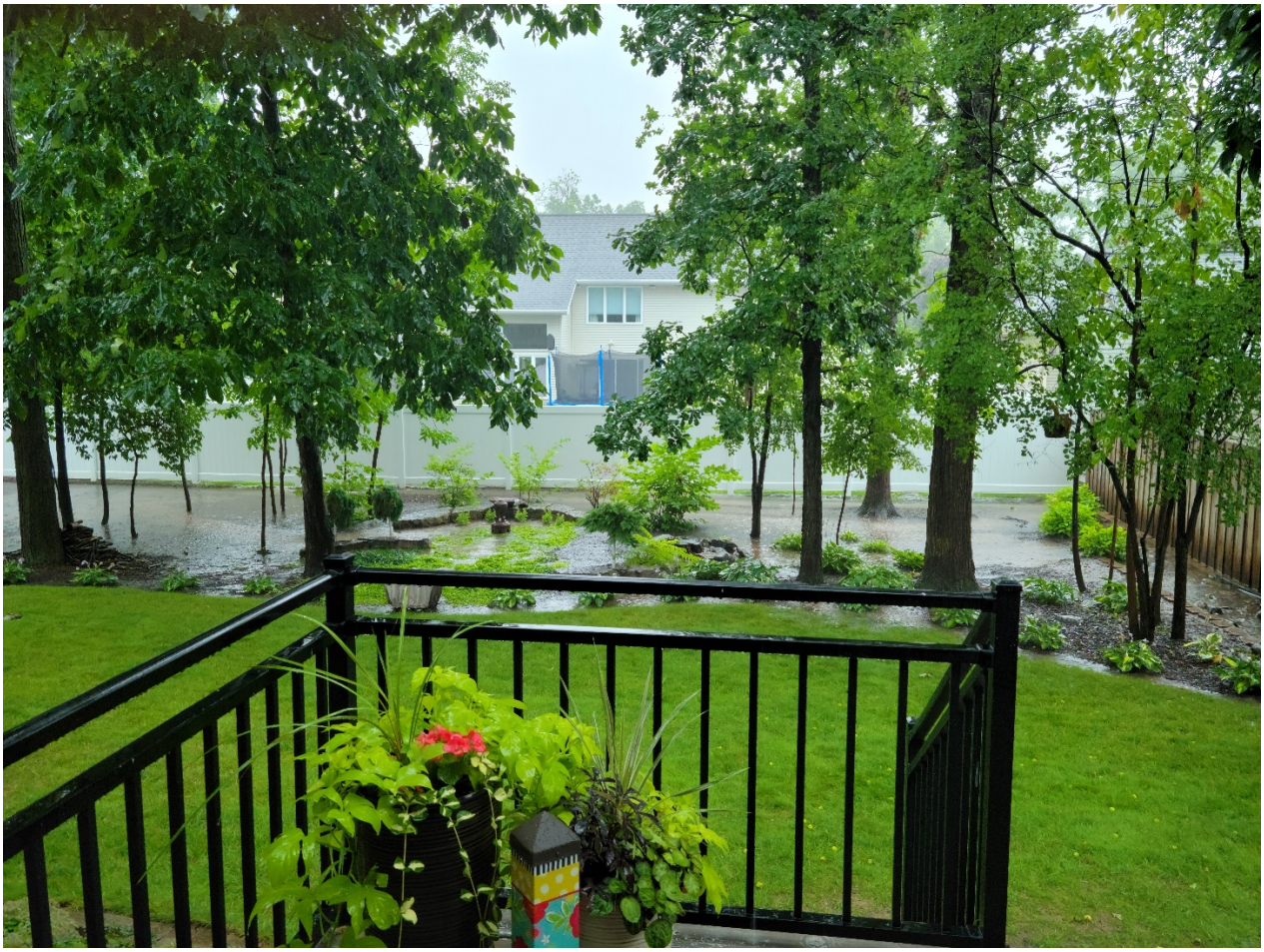

Report to the
# Protection and Policy Committee of the City of Green Bay

| MEETING DATE | PREPARED BY |
| --- | --- |
| March 21, 2023 | |

## AGENDA ITEM # M.5

To refer to staff a communication by Ald. Wery regarding the audio listening devices at City Hall, amended to limit the scope of the referral to internally gather information regarding the possible scope of work, including identifying entities able to perform the work, and any implications regarding legal proceedings. Staff will return to P & P with information.

## BACKGROUND

## RECOMMENDATION

## FISCAL IMPACT

## ATTACHMENTS

1. 2023-03-09 Dist 8 to P and P

**From:** noreply@civicplus.com
**To:** Celestine Jeffreys; Eric Genrich
**Subject:** Online Form Submittal: Alders" Petitions and Communications
**Date:** Thursday, March 9, 2023 8:18:52 AM

# Alders' Petitions and Communications

| | |
|---|---|
| Name | Chris Wery |
| Committee Name | Protection and Policy Committee |
| Text of Communication | Request an independent/outside cyber investigation of the audio listening system at city hall to include who accessed it and when since their installation. Were any audio recordings downloaded/saved?<br><br>Respectfully submitted,<br><br>Alderman Chris Wery |

Email not displaying correctly? View it in your browser.

Report to the
# Parks Committee of the City of Green Bay

| MEETING DATE | PREPARED BY |
| --- | --- |
| March 21, 2023 | |

## AGENDA ITEM # M.6

To refer to staff a request by Ald. Wery, which was referred from the Parks Committee, for consideration with possible action on the creation of a broad surveillance ordinance and policy. For full transparency to the public, employees and elected officials, all requests for surveillance must be submitted by each department and approved by City Council.

*The Council may convene in closed session pursuant to Section 19.85(1)(g), Wis. Stats., for the purpose of conferring with legal counsel for the governmental body who is rendering oral or written advice concerning strategy to be adopted by the body with respect to litigation in which it is or is likely to become involved. The Council will thereafter reconvene in open session pursuant to Section 19.85(2), Wis. Stats., to take action on items discussed in closed session, if appropriate, and to consider the remainder of the agenda.*

## BACKGROUND

## RECOMMENDATION

## FISCAL IMPACT

## ATTACHMENTS

1. 2023-02-07 Dist 8 to Parks

**From:** noreply@civicplus.com
**To:** Celestine Jeffreys; Eric Genrich
**Subject:** Online Form Submittal: Alders" Petitions and Communications
**Date:** Wednesday, February 8, 2023 9:17:22 PM

# Alders' Petitions and Communications

| | |
|---|---|
| Name | Chris Wery |
| Committee Name | Parks Committee |
| Text of Communication | Audio Spying at City Hall<br>I hereby request immediate removal of all audio spying surveillance in city hall and the creation of a broad surveillance ordinance and policy. For full transparency to the public, employees and elected official all requests for surveillance must be submitted by each department and approved by city council.<br><br>Request for review of unethical/illegal audio surveillance at city hall.<br>1) Why was audio surveillance installed?<br>2) Where is audio surveillance installed?<br>3) Who requested each location?<br>4) Who approved each location?<br>5) Why was city council not advised?<br>6) Do city employees know they are being spied on? If so, provide all notifications.<br>7) Why is surveillance signage not posted?<br>8) Why did the City of Green Bay break their own audio surveillance policy and what penalties should be enacted for breaking it for anyone involved in the approval process?<br>9) How long are audio recordings stored? Who has access? Are recordings subject to open records requests?<br>10) Provide any and all notifications (text messages, emails etc) provided to anyone regarding audio surveillance.<br><br>Respectfully submitted,<br><br>Alderman Chris Wery |

Email not displaying correctly? View it in your browser.

Report to the
# Protection and Policy Committee of the City of Green Bay

| MEETING DATE | PREPARED BY |
| --- | --- |
| March 21, 2023 | |

## AGENDA ITEM # M.7

Informational Only: The Liquor Violation Report.

## BACKGROUND

## RECOMMENDATION

## FISCAL IMPACT

## ATTACHMENTS

1. Report March 13 2023
2. 23LiqVio

# CITY OF GREEN BAY
# POLICE DEPARTMENT

**TO:** **PROTECTION AND POLICY COMMITTEE**

**FROM:** **COMMUNITY POLICING**

**DATE:** **March 13, 2023**

**From February 27, 2023, to March 13, 2023, there were no liquor violations, no DA referrals, no ordinance violations and no property referrals.**

**Sincerely,**

**LT. STEVE MAHONEY & LT. ERIN BLOCH**
**DISTRICT POLICING**

**sp**

# 2023 LIQUOR VIOLATIONS

| Subject's Name | Tavern Name And Address | Date/Type Violation | Status of Case |
|---|---|---|---|
| | | | |
| | | | |
| | | | |
| | | | |
| | | | |
| | | | |
| | | | |
| | | | |
| | | | |
| | | | |

Report to the
# Protection and Policy Committee of the City of Green Bay

| MEETING DATE | PREPARED BY |
| --- | --- |
| March 21, 2023 | |

## AGENDA ITEM # M.8

Informational Only: The Clerk's Office Liquor Licensing Report

## BACKGROUND

## RECOMMENDATION

## FISCAL IMPACT

## ATTACHMENTS

1. 3.8.2023 CLERK'S OFFICE LIQUOR LICENSING REPORT

# Licenses Granted By Common Council, but not yet Issued as of (3/8/2023):

| COMPANY NAME | TRADE NAME | ADDRESS | TYPE | APPROVER | LICENSE GRANTED |
|---|---|---|---|---|---|
| Confetti's, Inc. (Renewal) | Confetti's | 217 E. Walnut St. | "Class B" Liquor & Class "B" Beer License | Inspections | License Start Date of 7/1/2022. Extension granted until May 2023 |
| Taqueria Maldonado's Main Street LLC (Renewal) | The Razz by Maldonado's | 400 Schoen St. | "Class B" Liquor & Class "B" Beer License | Inspections | License Start Date of 7/1/2022 (Council Granted Extension on 9-20-2022 to anticipated opening date end of November). |
| 1001 Club, LLC | 1001 Club | 1001 Main St. | "Class B" Liquor & Class "B" Beer License | Inspections | Granted 9/20/2022 (Council granted extension until mid-February 2023. |
| Catering With Taste, Inc. | Catering With Taste | 618 Gray St. | "Class B" Liquor & Class "B" Beer License | Inspections | Granted 9/20/2022, extension granted until April 11, 2023. |
| R&D and Restaurant Holdings LLC | Delilah's | 115 N. Adams | "Class B" Liquor and Class "B" Beer License | Inspections | Granted 12/6/2022 |
| Allegedly LLC | Allegedly | 2056 Main St. | Class "B" Beer License | Inspections | Granted 12/20/2022 |
| Vast Properties Group LLC | Waterfront Market | 401 N Washington St. | "Class B" Liquor & Class "B" Beer Reserve License | Inspections | Granted 1/17/2023 |

# Summary of Licenses Granted and Issued for Available Liquor Licenses:

The City of Green Bay has a quota of 172 Class B Combination Liquor and Beer licenses under state law.

The City of Green Bay issued 167 of the 172 available Class B Combination Liquor and Beer licenses.

The City granted 5 licenses that have not yet been issued (see page 1).

The Clerk's Office cannot take any more applications for available liquor licenses at this time.

The City of Green Bay set forth by resolution that available liquor licenses are considered to those who apply with fully completed applications and first in time.

Liquor License Checklist:

(https://greenbaywi.gov/264/Liquor-Sales---New-Establishments)

The Clerk's Office shall only accept the number of applications that we have available licenses.

# Summary of Licenses Granted and Issued for Reserve Liquor Licenses:

The City of Green Bay has a quota of 23 Class B Combination Liquor and Beer Reserve licenses under state law.

The City of Green Bay has 1 Class B Combination Liquor and Beer Reserve issued.

The City of Green Bay has 1 Class B Combination Liquor and Beer Reserve license pending.

The difference between a Reserve and available liquor license is that a reserve is at a cost of a one-time non-refundable $10,000 issuance fee (plus license fee). The license shall not be transferred or surrendered.

**REPORT OF THE PROTECTION AND POLICY COMMITTEE**
**GRANTING OPERATOR LICENSES**
**March 21, 2023**

The Protection and Policy Committee wishes to request that the following applications for Operator Licenses be granted.
Stipulations placed on licenses shall continue to be in effect.

## OPERATOR LICENSES

Barth, Autumn V
Blake, Miranda A
Bondar, Ryleigh L
Butrym, Jackson F
Calo, Sarah C
Conrad, Christopher J
Crawford, Kolleen E
Edwards, Dantrell E
Godfrey, Darlene L
Huxford, Joshua J
Koehn, Connie A
Lancelle, Suzanne M

Report to the
# Green Bay Plan Commission

| MEETING DATE | PREPARED BY |
|---|---|
| March 21, 2023 | Stephanie Hummel, Staff |

## AGENDA ITEM # O.1

To amend the City's Comprehensive Plan for properties at 1035 VanderBraak (#20-350), 1030 Weise (#20-349), and unaddressed properties near 1119 VanderBraak (#20-381, #20-382 & #20-383) from Commercial to Low-Medium Density Residential. (Public Hearing held 03/13/23)

## BACKGROUND

**Primary Address:** 1035 Vanderbraak, 1030 Weise, 1119 Vanderbraak

**Alderperson/District**: Ald. Steven Campbell, District 6

**Reason for Request:** The proposed comprehensive plan amendment would allow for the rezoning of the property to Office Residential for future development.

**Surrounding Zoning and Land Uses:**
SUBJECT: Light Industry (LI) - Vacant Land and/or Vacant Building
NORTH: General Commercial (C1) - Auto Service Uses
SOUTH: Low Density Residential (R1) - Single- and Two-Family Homes
EAST: Low Density Residential (R1) and Public Institutional (PI) - Single-Family Homes and Bay View Park
WEST: N/A - Webster Avenue

**Comprehensive Plan:** The 2022 Smart Growth Green Bay Comprehensive Plan recommends Commercial uses for these parcels.

**Analysis:** The subject parcels are located along Vanderbraak Street on the City's east side and have the following characteristics:

- 1035 Vanderbraak Street: 23,528 square feet; existing vacant building on site (old ZoZo's Kitchen and Eagles Club)
- 1030 Weise Street: 17,837 square feet; vacant land
- Three un-addressed parcels near 1119 Vanderbraak Street:
  - #20-383: 8,741 square feet, vacant land
  - #20-382: 8,741 square feet, vacant land
  - #20-381, 8,741 square feet, vacant land

All five of these parcels are owned by the Redevelopment Authority and part of two proposed development sites. With the current zoning being Light Industry, a rezoning is needed for any future development to best fit this neighborhood. We are proposing in this application to change the Comprehensive Plan's land use recommendation to Low-Medium Density Residential to support a future rezoning application to Office Residential zoning. Both of these designations are appropriate for this neighborhood and for the types of projects being discussed for development.

The Smart Growth 2022 Comprehensive Plan establishes the following review criteria for periodic

amendments:
1. The change is consistent with the goals and objectives or other elements of The Smart Growth 2022 Comprehensive Plan.
o Staff feels the proposed amendment is consistent with the goals and objectives of the Comprehensive Plan as well as the Housing Market Study (2020).

2. The change does not create an adverse impact on public facilities and services that cannot be mitigated. Public facilities and services include roads, sewers, water supply, drainage, schools, police, fire, and parks.
o The proposed amendment should have no impact on public facilities and services.

3. Development resulting from the change does not create an undue impact on surrounding properties. Such development should be consistent with the physical character of the surrounding neighborhood or would upgrade and improve its viability.
o The proposed change in land use would not create a determent to the surrounding neighborhood. This change is more sensitive to the neighborhood fabric.

4. The change allows a more viable transition to the planned uses on adjacent properties than the current land use.
o The proposed amendment provides a potential transition from surrounding lower density residential uses to the south and east with the commercial uses to the north and to Webster Avenue to the west.

5. The change does not have a significant adverse impact on the natural environment including trees, slopes, and groundwater, or the impact could be mitigated by improvements on the site or in the same vicinity.
o There are no known natural features that would impact the future development of the site.

6. There is a change in City policies or neighborhood characteristics that would justify a change.
o 1035 Vanderbraak and 1030 Weise Street does not have access onto Webster Avenue. With that roadway's reconstruction, access is only through the neighborhood. Intense commercial uses and industrial zoning are inappropriate without access onto Webster Avenue.

7. The change corrects an error made in the original plan.
o Not applicable.

8. There is a community or regional need identified in the Comprehensive Plan for the proposed land use or service.
o The Comprehensive Plan and Housing Market Study both call for additional housing units. The Comprehensive Plan also calls for additional small commercial nodes in neighborhoods. This amendment and the accompanying zoning action will create that opportunity.

9. The change helps the City meet its life-cycle and affordable housing goals.
o Based on the Housing Market Study (2020) this request would assist in the rising need for housing units as identified as part of the study.

10. The change does not adversely impact any landmarks or other historically significant structures or properties unless mitigated through relocation, commemoration, or dedication.
o There are no landmarks or historically significant features that are being modified as part of the request.

The Public Participation Plan for Periodic Comprehensive Plan Amendments is being followed for this request and notices have been provided regarding the public hearings for this meeting. Ald. Steven Campbell and neighbors within 200 ft. have been noticed of the meeting based on Plan Commission policy. No inquires

have been made as of the drafting of this report.

## RECOMMENDATION

Approval of the request.

## FISCAL IMPACT

## ATTACHMENTS

1. CPA 23-02 Map

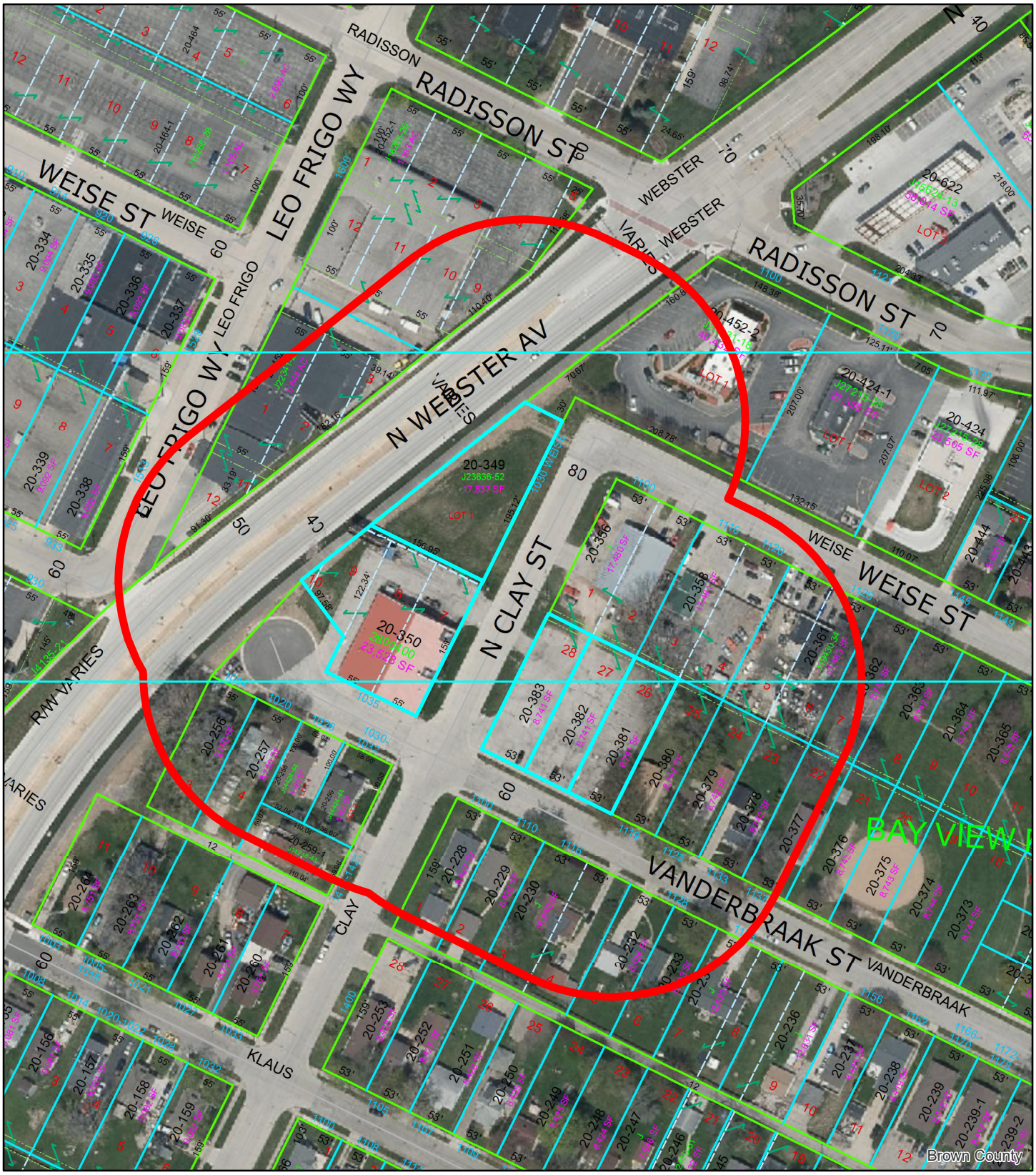


# (CPA 23-02) Comprehensive Plan Amendment
## Vanderbraak & Weise Street

Feet
0 40 80 160

N

*This is a compilation of records and data located in various City of Green Bay offices and is to be used for reference purposes only. The City of Green Bay is not responsible for any inaccuracies or unauthorized use of the information contained within. No warranties are implied. Map prepared by City of Green Bay Department of Community and Economic Development. E.R. 28 Feb 2023 X:\Planning\Basemaps\template_8.5x11.mxd*

Subject Properties

200-ft. Notification Area

Report to the
# Green Bay Plan Commission

| MEETING DATE | PREPARED BY |
|---|---|
| March 21, 2023 | David Buck, Staff |

## AGENDA ITEM # O.2

To establishment of a Planned Unit Development (PUD) for the Development of an Auto sales Use at 1577 Langlade Avenue (6-299-A & 6H-299-A-8), subject to the following conditions:

a. Adoption of the draft PUD; and
b. Consolidation of the two (2) individual lots.

(Public Hearing held 03/13/23)

## BACKGROUND

**Primary Address:** 1577 Langlade

**Reason for Request:** To allow the redevelopment of the site into an automobile dealership.

**Alderperson / District:** Ald. Melinda Eck / District 11

**Subject Parcel Zoning and Land Use:** Subject land area is split zoned with the northern 51 percent of the land area in the General Commercial District (C1) and the southern 49% of the land area in the Low-Density Residential District (R1). The property is currently developed as a landscaping nursery and garden retail center (Green Bay Nursery).

**Surrounding Zoning and Land Uses:**
North: General Commercial District (C1) - Restaurant and service businesses
South: Low Density Residential District (R1) - Single & two-family homes and assisted living
East: Low Density Residential District (R1) - Single & two-family homes
West: Low Density Residential District (R1) - Single-family homes

**Comprehensive Plan:** The 2022 Smart Growth Plan designates the northern half of the land area for commercial use and the southern half of the land area as low density residential as well as medium to high density residential to the southeast. Low density residential uses are recommended for the overall area to the south, west and east (across Military Avenue) and commercial use to the north. The 2011 Military Avenue Corridor Plan designates this site as a key redevelopment site and suggests "the site is appropriate for senior housing or other form of multifamily redevelopment utilizing building design and architecture that are compatible with nearby single-family homes."

The proposed zone change to a highway commercial use (including automobile dealerships) is fitting on the northern half of the property but is not consistent with the recommendation of the Comprehensive Plan or the Military Avenue Corridor Plan on the southern half of the property, due to the encroachment into the low-density residential area. The decision to utilize the Planned Unit Development is intentional to place additional control over the inconsistent use and development of the southern portion of the site with the purpose of mitigating potential negative impacts on the adjoining homes and neighborhood while accommodating the proposed use. In this way, the underlying land-use recommendations and underlying

zoning are retained, so in the event the proposed dealership is discontinued, the site would need additional review for redevelopment outside of those parameters.

**Analysis:** This request is for a proposed development of a franchised new and used automobile dealership with up to 30,000 sq. ft. of dealership facility building, automobile display areas, and secured automobile storage area on approximately 5.8 acres of land bound by low-density residential on the west and south, Langlade Avenue on the north and Military Avenue on the east. It consists of two (2) individual parcels that must be consolidated as part of this project.

Report: The proposed principal use is a franchised new and used automobile dealership, defined in the draft PUD as an auto seller that sells new and used cars for auto manufacturers such as Hyundai, Ford, General Motors, Honda, and other major brands. The inclusion of the franchised dealership is a control that would prohibit the use of the property for general used automobile sales, as franchised dealerships in almost all circumstances are tethered with additional design and performance standards not associated with general sales. Accessory uses customarily associated with a franchised automobile dealership include new and used automobile display area, storage area for automobiles to be serviced, offices, showrooms, parts departments, automobile service/repair department, automobile wash and other uses deemed appropriate by the Zoning Administrator.

As mentioned, the PUD zoning approach is being employed to limit intensity adjacent to the residential uses and, as such, the PUD limits the siting/placement by designated Development Areas "A" and "B". Development Area A is located on the northern portion of the property and is the main area of the site for public interaction including display, sales and service. Development Area A will include all proposed buildings, automobile display and customer parking and access from the public right-of-way will be entirely from Development area A. Development Area B will primarily be accessory uses dedicated to vehicle storage, employee parking, and access to parts department, automobile service/repair department, and automobile wash. Development Area B shall be secured with limited access to the public and no direct access from the public right-of-way. It shall be regulated within this PUD so that it is designed and operated to minimize potential impact and disruption to the low-density and senior housing uses surrounding it, including increased buffer landscaping, fencing, low level time-controlled lighting, and security cameras.

Staff have concerns about the establishment of a highway business use with over 1,600 ft. of common lot lines with the rear and side yards of low and medium density residential uses and would adamantly object to a straight zone change to the Highway Commercial District (C2). However, after multiple informational meetings held by the applicant, the adjustments made /protection offered in the request (including heightened regulations on the southern half of the area), and lack of comments or objections expressed by neighbors or the business community, staff can support the PUD request. Understand that the City's Comprehensive Plan and Military Avenue Corridor Plan will not be altered and that the very specific PUD is an overlay district, so the underlying/base General Commercial (C1) and Low Density Residential (R1) zoning will remain in place. This is important because if the proposed franchised dealership is not established or is discontinued, redevelopment of the site would need to follow base zoning regulations or city action to change the comprehensive plan or base zoning classification, thereby requiring neighbors, Plan Commission and elected official review.

If the draft PUD is approved with conditions, the final step for the development of the proposed apartment will simply be a lot consolidation and administrative review/approval of a site plan and building permit related to the PUD and the zoning ordinance.

The applicants met and shared their concept plans on three (3) different occasions with the John Muir Park Neighborhood Association, the Military Avenue Business Association and neighborhood / surrounding property owners within 400 ft. of the project area. Feedback was received, and plans were modified to attempt to address the concerns of neighbors. Ald. Melinda Eck, adjacent property owners and the John

Muir Park Neighborhood Association have been notified of the request and the Plan Commission meeting by staff. Staff has not received any inquiries or objections as of the drafting of this report.

## RECOMMENDATION

Approval of the request, subject to the following conditions:

1. Adoption of the draft PUD; and
2. Consolidation of the two (2) individual lots.

## FISCAL IMPACT

## ATTACHMENTS

1. 1577 Langlade - Request for City Action Plan Commission
2. ZP 23-05 PropMap
3. ZO XX-23 Draft PUD for 1577 Langlade w attachments

# REQUEST FOR CITY ACTION
# PLAN COMMISSION

Community and Economic
Development Department
100 N. Jefferson Street, Rm 608
Green Bay, WI 54301-5026
(920) 448-3400 - phone
(920) 448-3426 - fax
www.greenbaywi.gov

Location of Property: 1577 Langlade Green Bay WI 54304

Parcel Number(s): 6-299-A & 6-299-A-8

Petitioner(s): Broadway Ford Hyundai | Michael Cuene Date: 1/31/2023

Email: mcuene@broadwayautomotive.com Phone Number: 920.366.0025

Address: 1010 S. Military Ave City: Green Bay State: WI Zip: 54304

Property Owner: Bridget Flagstad Phone Number:

Submit this Request Form and all required attachments to the Community and Economic Development Department, Room 608, City Hall

To: Honorable Mayor and Common Council, c/o City Clerk

I, Michael Cuene, respectfully request that the City of Green Bay take the following action:

- [x] Rezone Property ($375.00 Review Fee)
- [ ] Conditional Use and CUP Amendment, including Single Lot Duplexes ($375.00 Review Fee)
- [ ] PUD and PUD Amendments ($425.00 Review Fee)
- [ ] Approve Preliminary City/Extraterritorial Subdivision Plat ($150.00 + $35.00 per Lot/Outlot Review Fee)
- [ ] Approve Preliminary Condominium Plat ($250.00 + $35.00 per Lot/Outlot/Lot Equivalent Review Fee)
- [ ] Approve Preliminary City/Extraterritorial Certified Survey Map ($250.00 Review Fee)
- [ ] Approve Final City/Extraterritorial Subdivision Plat ($150.00 Review Fee)
- [ ] Approve Final Condominium Plat ($150.00 Review Fee)
- [ ] Grant a City/Extraterritorial Subdivision/CSM Variance ($150.00 Review Fee)
- [ ] Development District Map Amendment ($200.00 Administration Fee)
- [ ] Official Map Amendment ($200.00 Administration Fee)
- [ ] Plat of Right-of-Way ($200.00 Administration Fee)
- [ ] Discontinue a Public Utility Easement ($200.00 Administration Fee)
- [ ] Street Name Change ($200.00 Administration Fee)
- [ ] Declare City Property "City Surplus" ($200.00 AdministrationFee)
- [ ] Vacate a Street/Alley/Pedestrian Way ($300.00 AdministrationFee) PLEASE FILL OUT PAGE 2 OF APPLICATION
- [ ] Closure of Street/Alley/Pedestrian Way ($300.00 AdministrationFee) PLEASE FILL OUT PAGE 2 OF APPLICATION
- [x] Comprehensive Plan Amendments ($275.00 Review Fee)
- [ ] Other ($200.00 Administration Fee):

Owner Signature: Bridget Flagstad Date: 1/31/2023

Petitioner Signature(s): 2/1/2023

**Checklist of required attachments:**

- **Map**
- **Legal Description**
- **Applicant Narrative Describing Project**
- **All Other Pertinent Information**

For office use only:
Review Fee: Receipt No.: Zoning Petition No.:

January 31, 2023

To whom it may concern,

I, Bridget Flagstad, property owner, authorize Michael Cuene and Broadway Ford Hyundai to petition the City of Green Bay to rezone the following property:

| | |
|---|---|
| Address: | 1577 Langlade Green Bay, WI. 54304 |
| Parcel ID | 6-299-A & 6-299-A-8 |
| Rezone: | Current: R1 & C1 |
| | To: C2 |

Thank you for your attention,

Bridget Flagstad

Bridget Flagstad

Property owner
1577 Langlade Ave
Green Bay, WI 54304

# Property Redevelopment

To:

City of Green Bay
Request for City Action
Plan Commission

Property:

1577 Langlade Avenue
Green Bay, WI. 54304
Parcel: 6-299-A
6-299-A-8

Petitioner:

Broadway Enterprises, Inc
1106 S. Military Ave.
Green Bay, WI. 54304

Michael Cuene
E: mcuene@broadwayautomotive.com
M: 920.366.0025

Action Request:

Rezone Property:

| | |
|---|---|
| From: | Dual Zone: R1 \| C1 |
| To: | Planned Development C2 |

Comprehensive Plan Amendment

## DEVELOPMENT: HYUNDAI DEALERSHIP SALES & SERVICE

Retail & Service Categories:

- New Vehicles Sales
- Certified Pre-Owned Sales
- Service Department
- Parts Department

Footnote: NO Collision Center

Business operation will utilize current State of Wisconsin Sales License | 542

Facility Requirements

Square Footage: 25,000 sq. ft. to 30,000 sq. ft.

Footnote: Drawings to be utilized for discussion and are not to be considered final.

## CITY OF GREEN BAY: CHANGE REQUEST | PROPERTY & ACCESS

Direct Access | Military Ave.

- South traffic lane only
- No cross-traffic access request.

No Access | Argonne Drive

Address Change Request

From: 1577 Langlade Ave.
To: 1400 S. Military Ave.

Langlade Driveway | Extended Driveway

Langlade Avenue will serve as the primary access to the dealership. Broadway is requesting an extended or oversized driveway for the following reasons:

- Limited access as the result of no access on Argonne Drive increases traffic volume.
- Visibility and safety.
- It is our understanding the Golden Basket frequently utilizes street parking. During peak periods of street parking, our goal is to ensure safe, easy access for vehicle and truck traffic.

## GREENSPACE | LANDSCAPE BUFFER

Broadway will follow landscape buffer requirements.

Broadway will provide both natural and produced sound and light buffers including a combination of trees, hedges, and fencing.

| | |
|---|---|
| Privacy \| Dense | Cedar, Arborvitae, or Juniper |
| Privacy \| Semi | Boxwood (various) |
| Decorative | Perennials and grasses. |
| Tree | Maple and Magnolias |

Privacy | dense plantings will be utilized as a buffer at property lines for a residential homes on Argonne Drive and Biemeret Street.

## FENCING & GATES

Broadway will provide non-transparent, full privacy fence near property lines for residential homes on Argonne Drive, Biermeret Street, and Cottonwood Manor Assisted Living .

The materials will be selected that best compliment final building design in addition:

Non-chain-link

Maintenance free / limited maintenance material: Composite, metal, aluminum, concrete.

Fence Heights.

Various fence heights will be utilized during this project. The secured area fencing and fencing parallel to west property line will be a minimum of 54” in height.

Gates. With consideration of final dimensions (weight, length), access gates may utilize chain-link style fencing.

## FACILITY & LOT LIGHTING

All facility and lot lighting will follow our *posted hours of operation*. Our current hours of operation are outlined below:

Hours of Operation

| | SALES | SERVICE |
|---|---|---|
| Monday | 9:00 am - 7:00 pm | 7:00 am - 6:00 pm |
| Tuesday | 9:00 am - 7:00 pm | 7:00 am - 6:00 pm |
| Wednesday | 9:00 am - 7:00 pm | 7:00 am - 6:00 pm |
| Thursday | 9:00 am - 7:00 pm | 7:00 am - 6:00 pm |
| Friday | 9:00 am - 6:00 pm | 7:00 am - 6:00 pm |
| Saturday | 9:00 am - 5:00 pm | 7:00 am - 1:00 pm |
| Sunday | Closed | Closed |

Footnote regarding hours: Example: Pre-covid sales open to 8:00 PM.

Goal: Targeted lighting to provide visibility and safety for guests and associates.

Styles & Types

Wall Packs
Pole Mount
Bollards

Secured Area

Due to size and use, some pole lighting will be required in this area. Our goal is to limit pole lighting to a minimum. In addition, our goal is to utilize bollard style lighting especially in the evening hours. Overall, safe lighting during business hours, controlled or limited lighting during non-business hours.

All Other Areas

Display an other areas will utilize lighting in a manner that controls lighting but displays inventory to normal industry standards.

## LIMITED ACCESS | SECURED AREAS

Area usage / utilization will follow our *posted hours of operation*. Our current hours of operation are outlined below:

Hours of Operation

| | SALES | SERVICE |
|---|---|---|
| Monday | 9:00 am - 7:00 pm | 7:00 am - 6:00 pm |
| Tuesday | 9:00 am - 7:00 pm | 7:00 am - 6:00 pm |
| Wednesday | 9:00 am - 7:00 pm | 7:00 am - 6:00 pm |
| Thursday | 9:00 am - 7:00 pm | 7:00 am - 6:00 pm |
| Friday | 9:00 am - 6:00 pm | 7:00 am - 6:00 pm |
| Saturday | 9:00 am - 5:00 pm | 7:00 am - 1:00 pm |
| Sunday | Closed | Closed |

Footnote regarding hours: Example: Pre-covid sales open to 8:00 PM.

Primary Use: Parking

- Service Department
- Associate Parking
- Company Vehicle
- New Vehicle [Overflow]

Secure | Fencing

- Area secured by gates and fencing during non-business hours.

Parts Delivery

Hyundai Motor America requires 24 hours parts delivery access to our dealership. Based upon final dealership layout, access to secured area might be required.

Maintenance

- Our professional maintenance team customarily begins cleaning immediately after close of operations. There are some instances cleaning is completed in the early morning hours.

# Property Redevelopment

ARGONNE DR
BIEMERET ST
BIEMERET ST
ARGONNE DR
LANGLADE AV
LANGLADE AV
SMITHARY AV
6-299-A

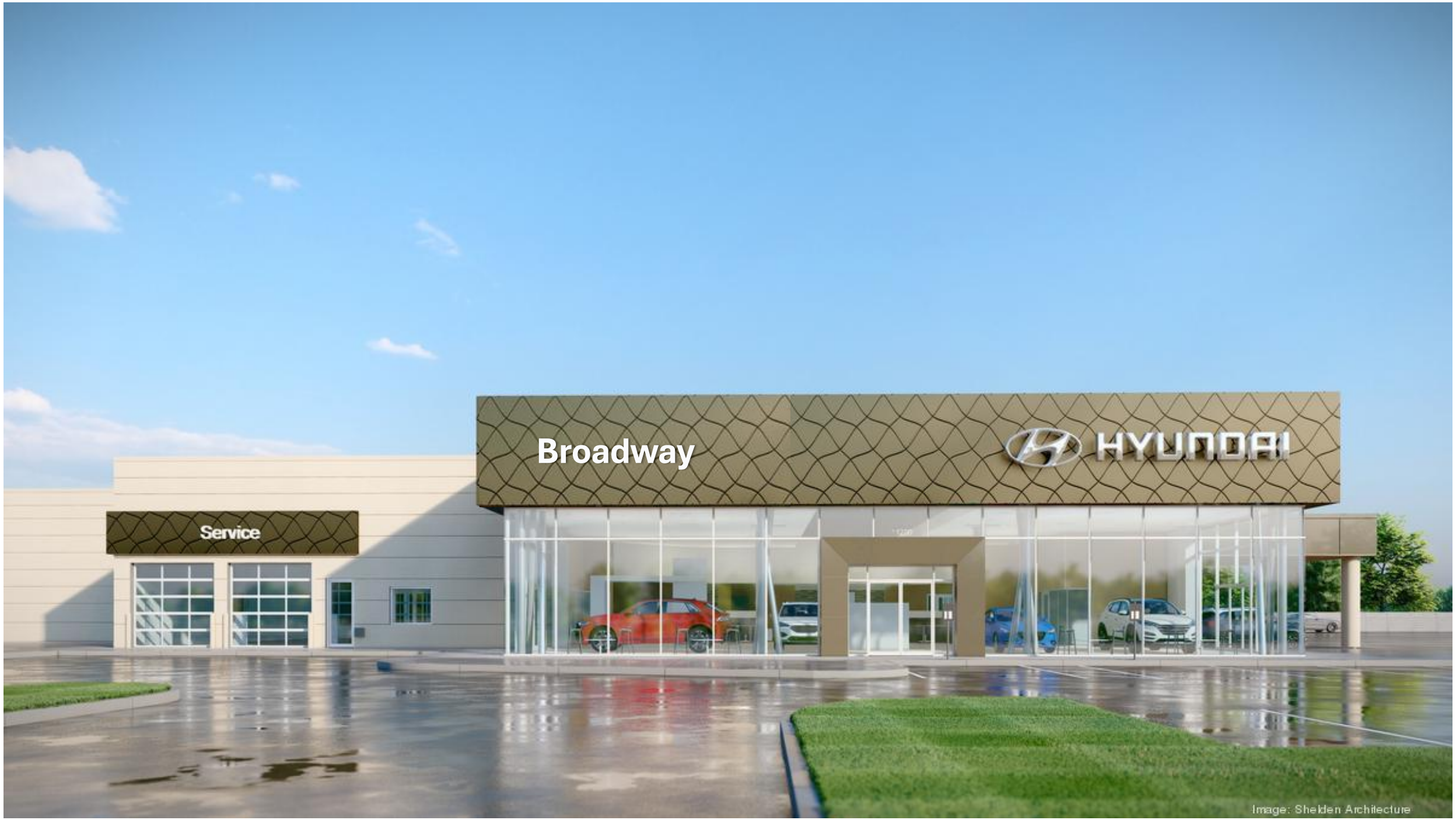
Broadway
HYUNDAI
Service
Image: Shelden Architecture

HYUNDAI

HYUNDAI

ROTARY LIFT

HYUNDAI

# BUILDING & FACILITY DESIGN CONCEPTS

1. Showroom | Adm
2. Service Write-up
3. Parts Dept.
4. Locker Room
5. Technician Work Area
6. Car Wash

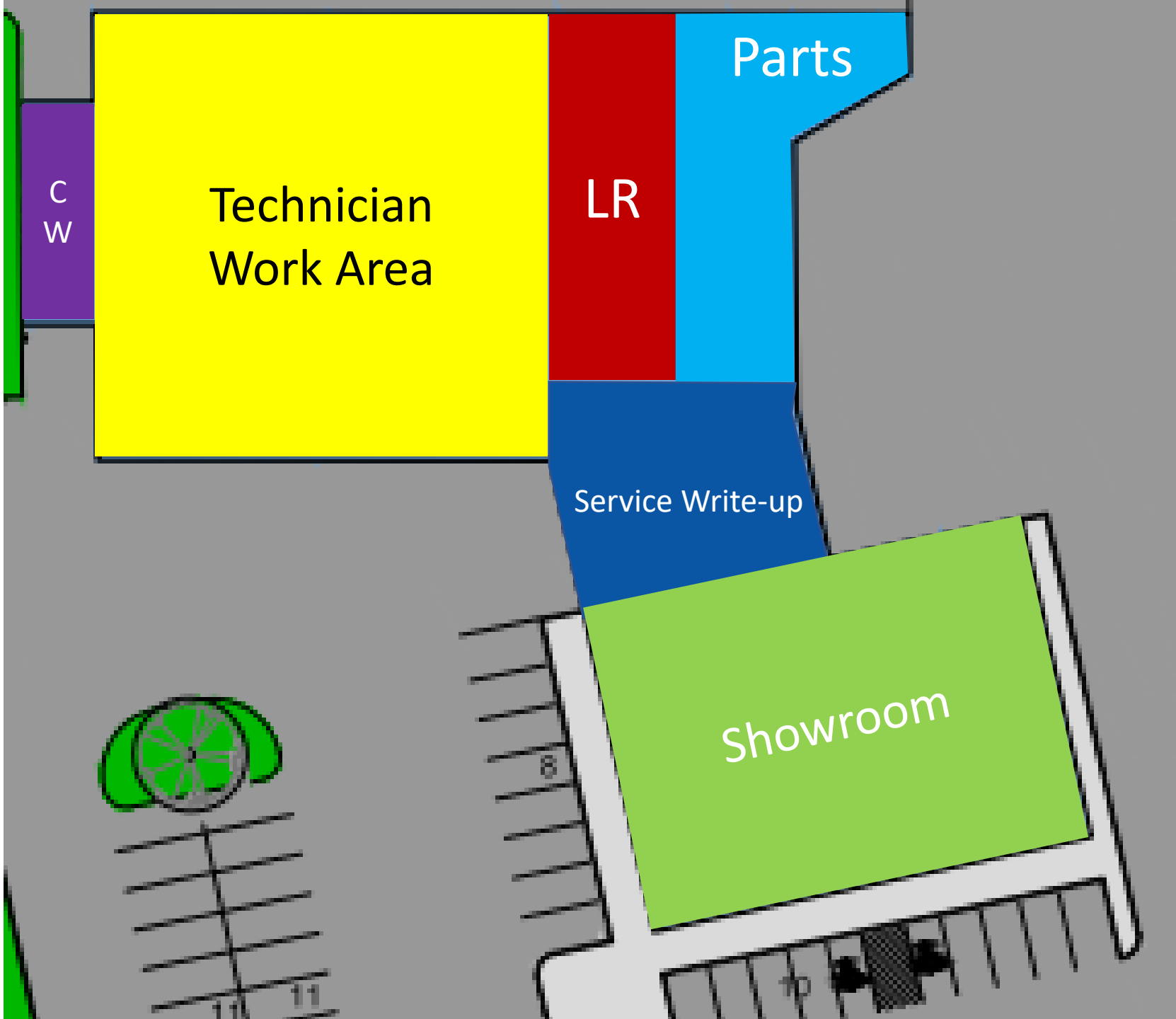

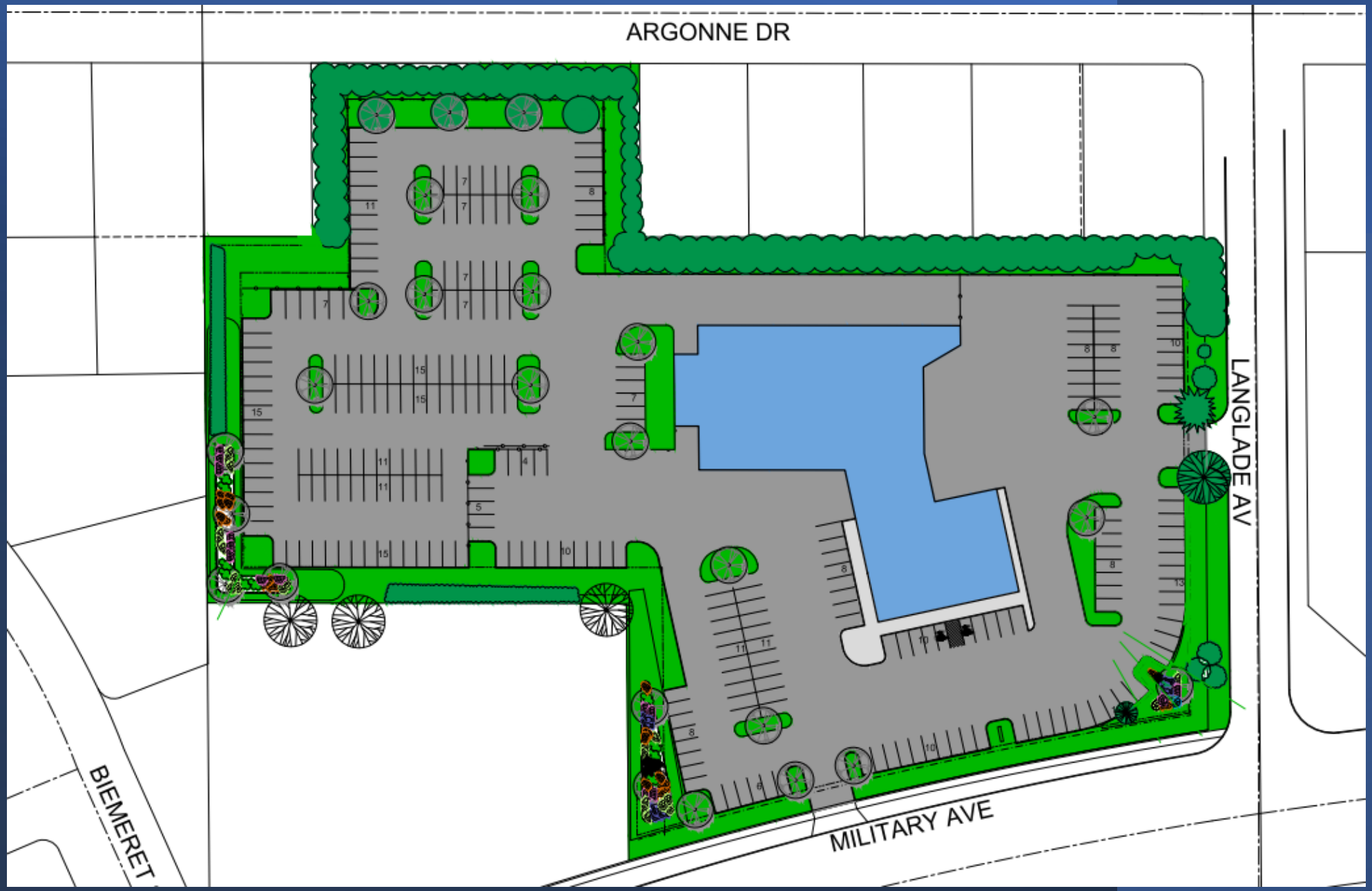
ARGONNE DR
LANGLADE AV
MILITARY AVE
BIEMERET

- ✓ 25,500 Sq. Ft. Facility | Locally Owned
- ✓ Request for Address Change
  - From: 1577 Langlade
  - To: 1400 S. Military
- ✓ Two (2) Driveway Locations
  - Military Ave
  - Langlade Ave
  - NO access on Argonne Dr
- ✓ Vehicle Parking | 275 Stalls
  - New Vehicle Display
  - Customer | Sales & Service
  - Associates
- ✓ Limited | Secure Access Areas
  - Gates & Fencing
  - Cameras
- ✓ Hours of Operation

| | SALES | SERVICE |
|---|---|---|
| Monday | 9:00 am - 7:00 pm | 7:00 am - 6:00 pm |
| Tuesday | 9:00 am - 7:00 pm | 7:00 am - 6:00 pm |
| Wednesday | 9:00 am - 7:00 pm | 7:00 am - 6:00 pm |
| Thursday | 9:00 am - 7:00 pm | 7:00 am - 6:00 pm |
| Friday | 9:00 am - 6:00 pm | 7:00 am - 6:00 pm |
| Saturday | 9:00 am - 5:00 pm | 7:00 am - 1:00 pm |
| Sunday | Closed | Closed |

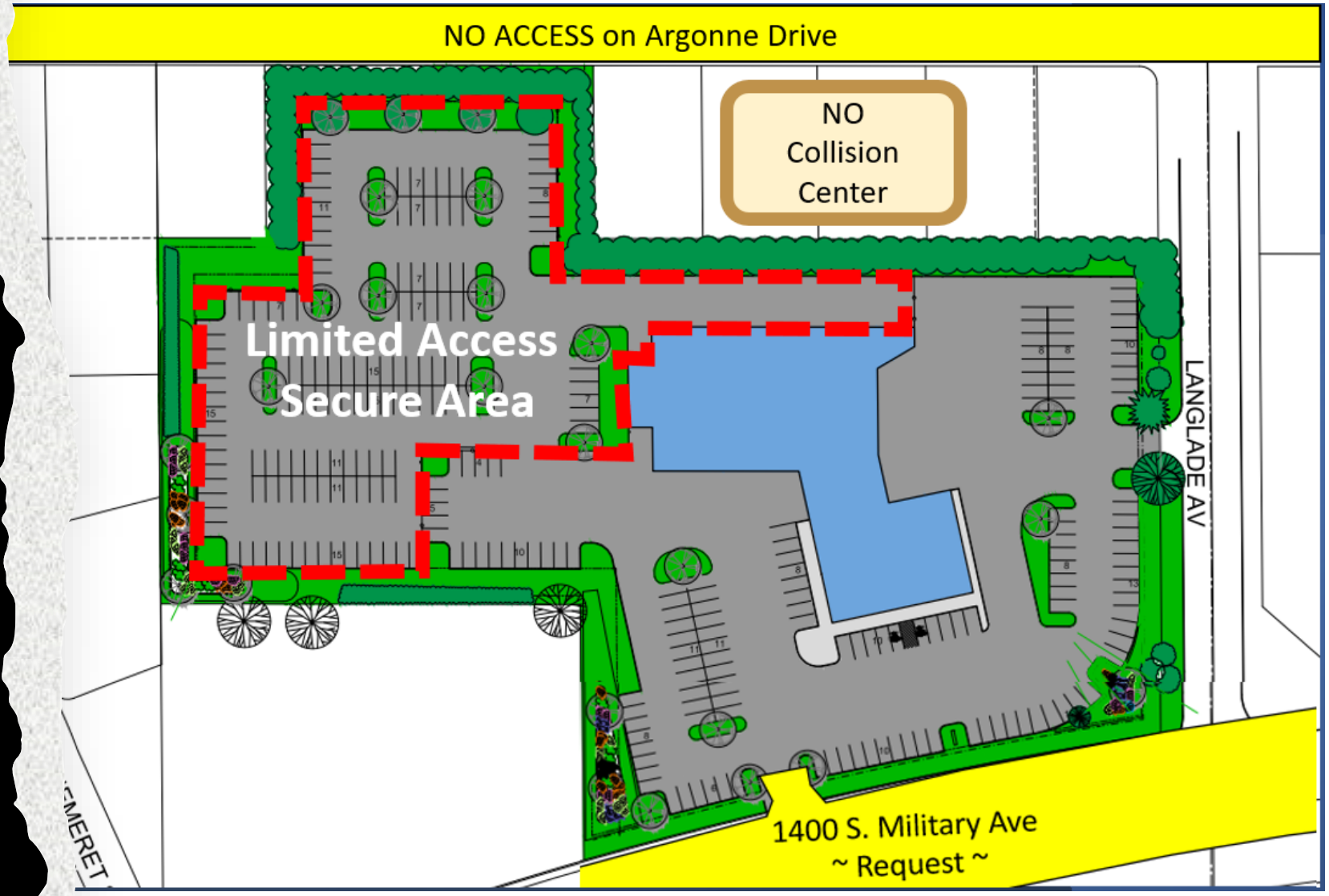

- Property Line Screen | Buffer
  - Minimum 25’ buffer
  - Combination of:
    - Trees
    - Fence (Hyundai height!)
    - Perennials

    Examples to follow
- Professional Maintenance
  - Landscape
  - Snow removal | off premise
- Exterior Lighting | Safety of Guests and Associates
  - Goal: Targeted, control light wash
  - Type: Wall packs, Pole, Bollards

    Examples to follow
- Overhead Doors
  - GOAL: Three (3) door facing Argonne Dr.
  - Count: 8 to 10

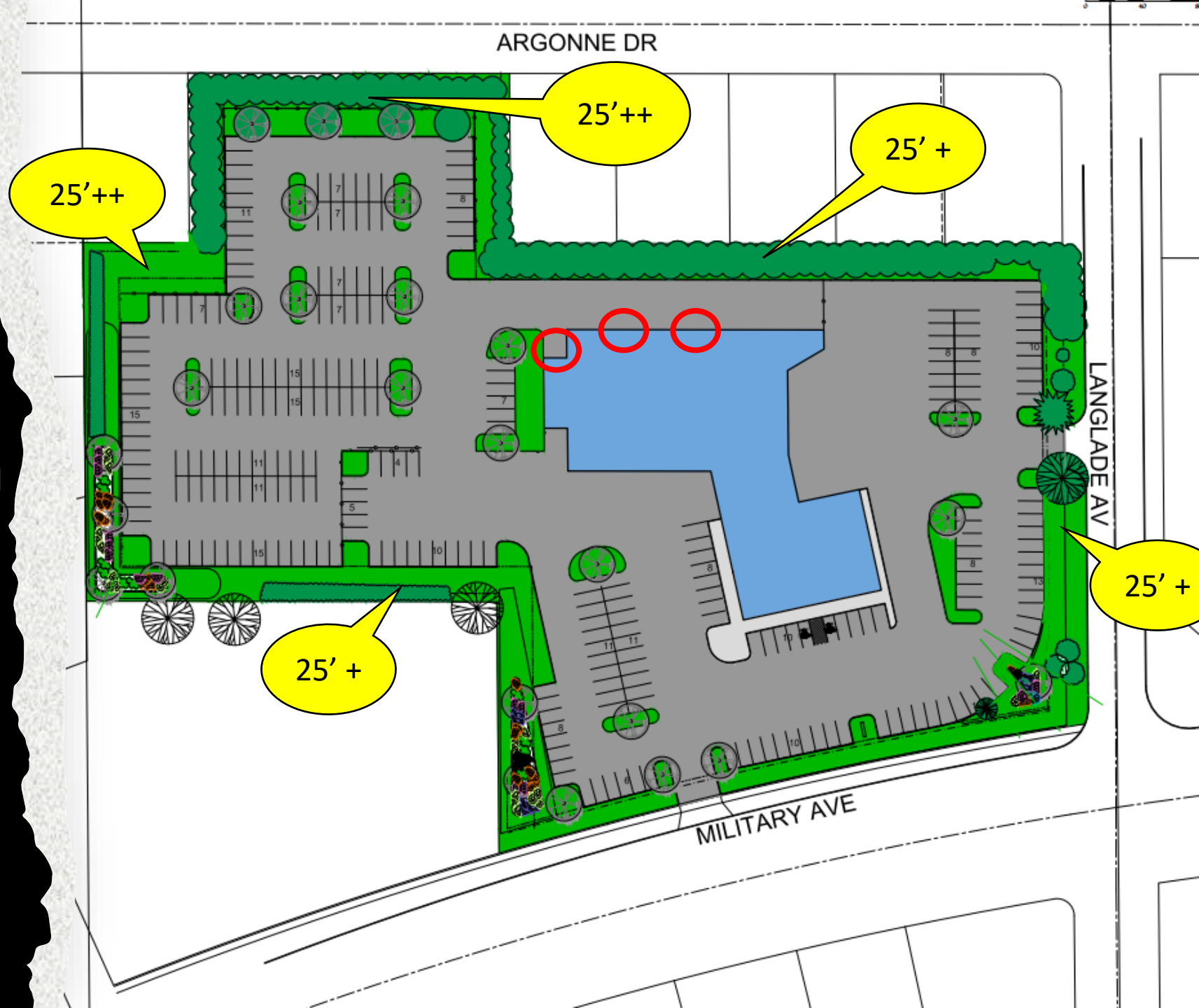

# LED Modern Outdoor Lighting

## Modern Post Light

LED technology utilized with this pole light fixture directs the light downward, good for the environment and wildlife as well. UL Listed for wet locations and 50,000 hours life.

More lights does NOT equal “better” light.

## Modern Wall Pack

## Modern Bollard

Hyundai Height | Headlights, Noise, Privacy, Attractive

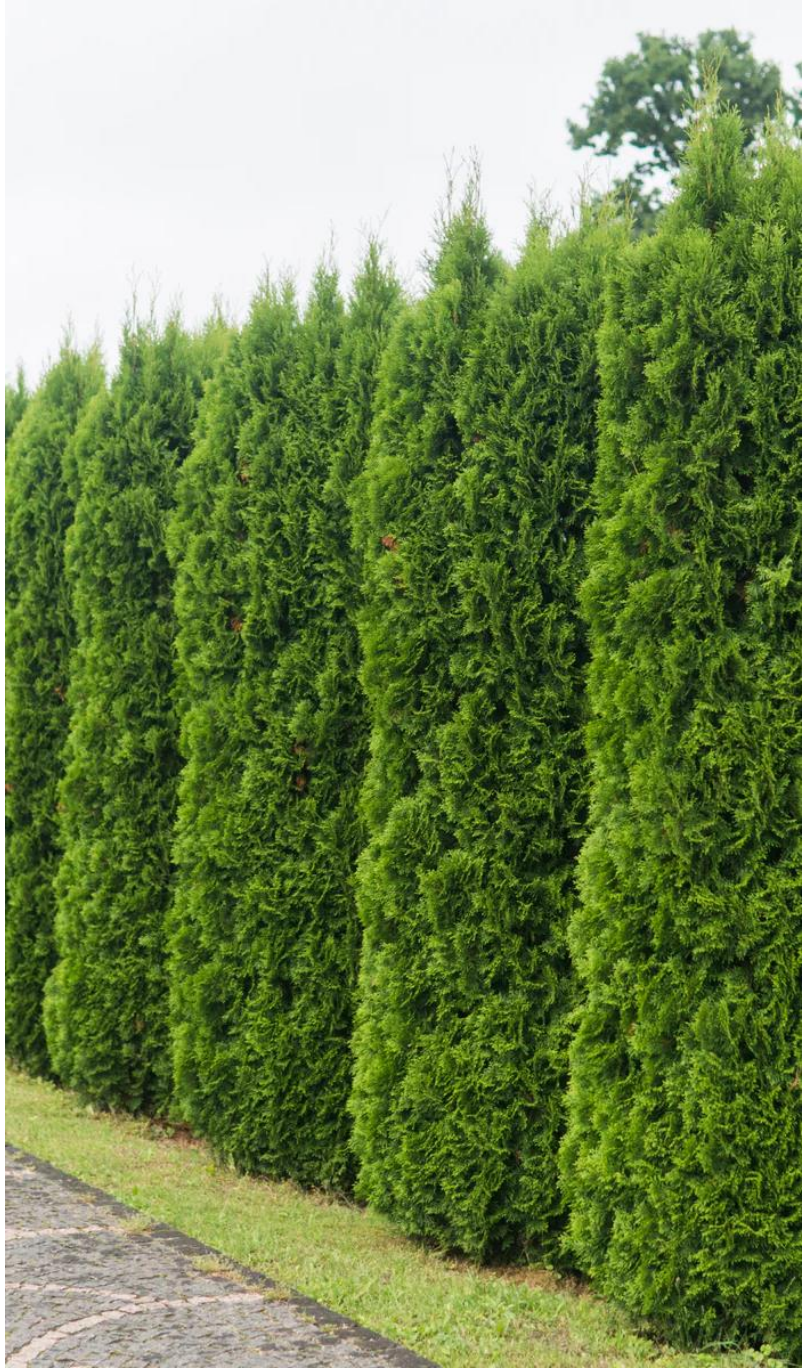

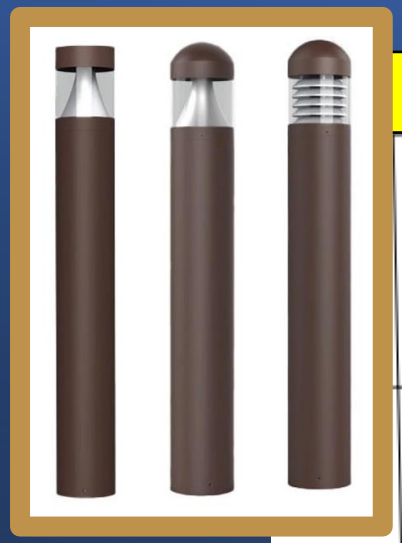

NO ACCESS on Argonne Drive

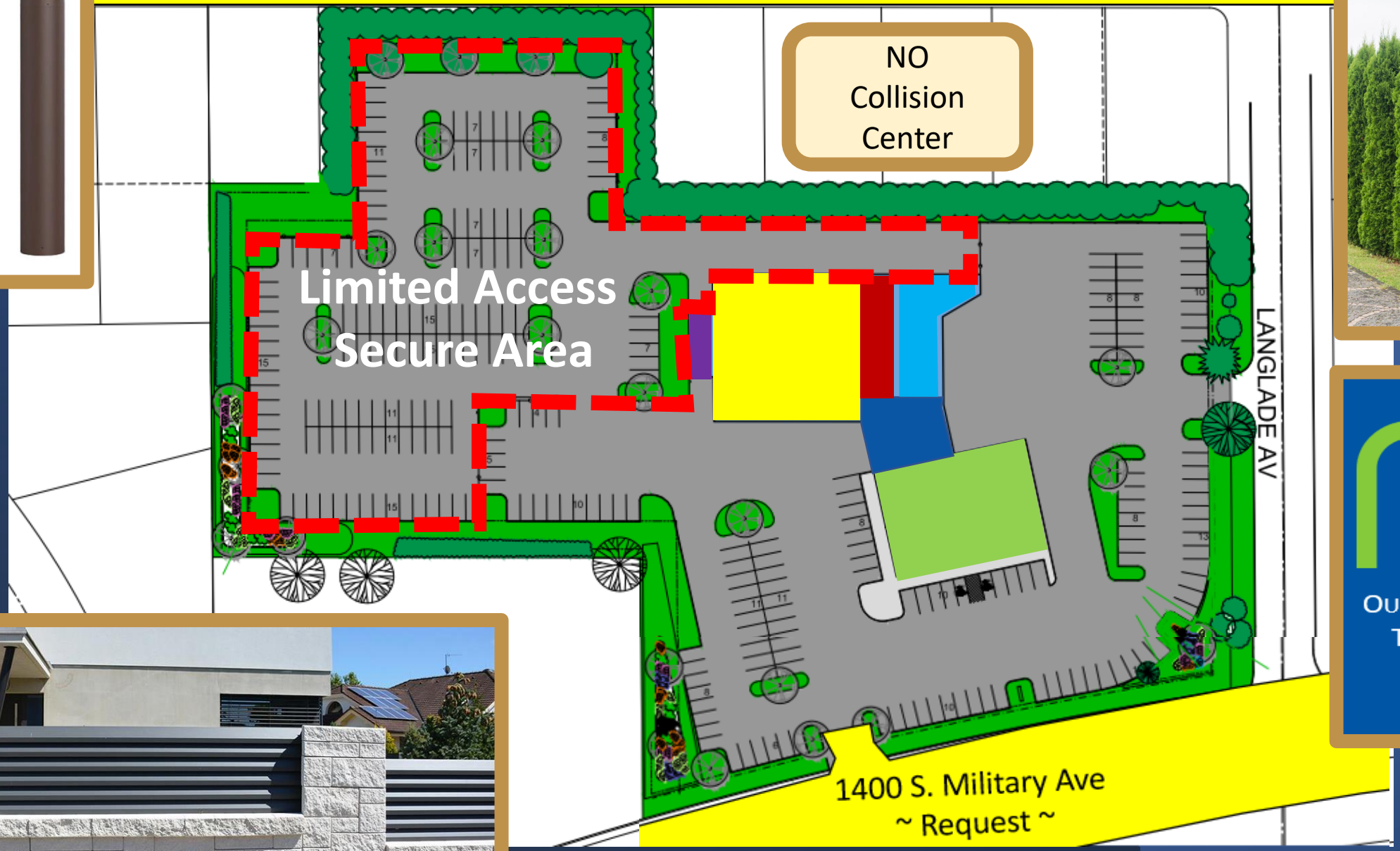


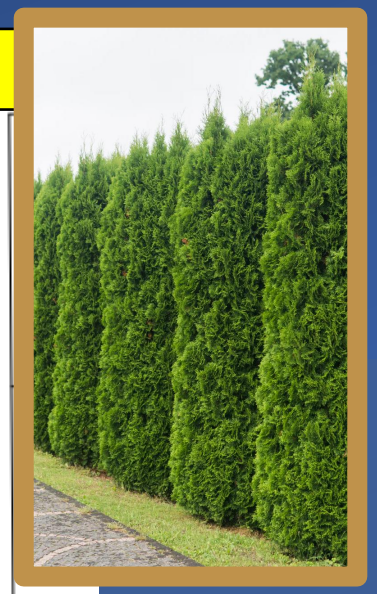

EXIT
ROUTE

OUR NEIGHBORS
THANK YOU

Proposed PUD

400' Property Owner Notice

This is a compilation of records and data located in various City of Green Bay offices and is to be used for reference purposes only. The City of Green Bay is not responsible for any inaccuracies or unauthorized use of the information contained within. No warranties are implied.
Map prepared by DB

**Zoning Petition (ZP 23-05)**
**Proposed Planned Unit Development (PUD) at 1577 Langlade Avenue**

CITY OF GREEN BAY 1854 Titletown, USA

**ZONING ORDINANCE NO. XX-23**

**AN ORDINANCE**
**CREATING A PLANNED UNIT DEVELOPMENT (PUD)**
**OVERLAY DISTRICT FOR PROPERTY ON THE**
**1577 LANGLADE AVENUE**
**(ZP 23-05)**

THE COMMON COUNCIL OF THE CITY OF GREEN BAY DOES ORDAIN AS FOLLOWS:

**SECTION 1.** Section 44-30, Green Bay Municipal Code, together with the zoning map referred to therein, is hereby amended by establishing a Planned Unit Development Overlay District on the following described properties, as also depicted on Exhibit A - Location Map:

Parcel Identification and Legal Description:

| Parcel No. | Address | Legal Description |
|---|---|---|
| 6-299-A | 1577 Langlade Ave, Green Bay, WI 54304 | PRT OF E 40 AC OF W 70 AC OF PC 10 WSFR DESC IN 303 D 10 & 232 D 349 EX 73 MR 568 & EX 19 LC 179 & EX 19 LC 463 & EX 1 CSM 369 & EX PCL E OF 2 CSM 633 & EX 17 CSM 121 & EX ST & PRT OF VAC ARGONNE CT DESC IN 2424595<br>4.398 AC M/L |
| 6-299-A-8 | 0 Argonne Drive, Green Bay, WI 54304 | LOT 2 OF 17 CSM 121 BNG PRT OF PC 10 WSFR & PRT OF VAC ARNOLD DR ADJ & PRT OF VAC ARGONNE CT DESC IN 2424595<br>1.433 AC M/L |

Land Area comprises approximately 253,998 square feet / 5.831 acres

**SECTION 2.** Pursuant to Chapter 44, Article XX, Green Bay Municipal Code, as it applies, the following conditions are imposed:

A. Purpose and Intent. The Planned Unit Development (PUD) is being utilized to permit the development of a franchised new and used automobile dealership with up to a 30,000 square feet of dealership facility, automobile display areas, and secured automobile storage area. The overall appearance and design of the site, site improvements and the building shall be in substantial conformance with the attached Exhibits and as regulated within this PUD.

B. Development Site. Area included within this PUD currently consists of two (2) individual parcels; one (1) located at the southwest corner of Langlade Ave and

Military Ave and one (1) that fronts Argonne Drive. The two (2) individual parcels shall be combined to a single tax parcel prior to issuance of administrative site plan approval, building permit and occupancy permit.

C. Land Use Regulations. The principal and accessory land uses which may be established and/or maintained on the subject property are as follows:
   1. Principal uses (within a single structure): Franchised new and used automobile dealership. A franchised dealership is defined in this PUD as an auto seller that sells new and used cars for auto manufacturers such as Hyundai, Ford, General Motors, Honda, and other major brands.
   2. Accessory uses customarily associated with a franchised automobile dealership including new and used automobile display area, storage area for automobiles to be serviced, offices, showrooms, parts departments, automobile service/repair department, automobile wash and other uses deemed appropriate by the Zoning Administrator.
   3. Said uses listed in Section 2.C.1 & 2 are limited to siting/placement by designated Development Area, as depicted on Exhibit B - Development Areas.
      a. Development Area A – the main area of the site for public interaction including display, sales and service. Development area A will include all proposed buildings, automobile display and customer parking. Access from the public right-of-way will be entirely from Development area A.
      b. Development Area B – Area dedicated to vehicle storage, employee parking, and access to parts department, automobile service/repair department, automobile wash including service bay/overhead doors. Development area B shall be secured with limited access to the public and no direct access from the public right-of-way. It shall be regulated within this PUD so that it is designed and operated to minimize potential impact and disruption to the low-density and senior housing uses surrounding it including buffer landscaping, fencing, low level time-controlled lighting, and security cameras.
   4. Prohibited Uses. As the property is located directly adjacent to low density residential and senior housing, this PUD limits certain uses from being established on the site that may be considered typical accessory uses to the franchised automobile dealership including collision center and outdoor storage of parts and equipment. All proposed uses are not listed in Section 2.C are subject to a PUD amendment.
   5. Hours of Operation. Sales hours shall be limited to no earlier than 9 a.m. and no later than 8 p.m. Delivery, repair and service hours shall be limited to no earlier than 7 a.m. and no later than 8 p.m. with the exception of parts delivery, which shall be allowed 24 hours but limited to Development Area A. Development Area B shall not be accessible after the hours of operation.

D. Dimensional and Area Requirements. The overall appearance and design of the site and site improvements shall be in substantial conformance with attached Exhibit B and as regulated within this PUD and the Green Bay

Municipal Code, Chapter 44. Dimensional and area requirements for principal structure and surface parking on the subject property shall be regulated as follows:

1. General Site
   a. Maximum Building Height: Principal building shall not exceed 35 feet in height.
   b. Maximum Impervious Surface: 80%
2. Setbacks
   a. Front Yard Setbacks (Argonne & Langlade): 25 feet
   b. Front yard Setbacks (Military): 15 feet
   c. Side Yard Setback (internal west & east lot lines): 25 feet
   d. Rear Yard Setbacks (south lot line): 25 feet

E. Access Circulation and Parking. Access, circulation, and parking within the PUD area shall meet the standards as set forth within the Green Bay Zoning Code, Article XVIII of the Green Bay Municipal Code, and as modified as follows:

1. The site is limited to two (2) driveways. One (1) full access vehicular access driveway (may be designed for Semi-Trailers) may be located on Langlade Avenue no closer than 155 feet from the Military Avenue – Langlade Avenue intersection and one (1) limited right-in/right-out vehicular access driveway (designed for automobile and single axle trucks) may be located on Military Avenue no closer than 305 feet from the Military Avenue – Langlade Avenue intersection.
   a. No access for vehicles or pedestrians shall be permitted to be located to access Argonne Drive.
2. Parking shall be provided as regulated in Green Bay Municipal Code, Chapter 44, Article XVIII-Off-Street Parking, Drives and Loading for motor vehicle rental/sales.
3. Pedestrian access shall be provided from the public sidewalk adjoining the development on Military Avenue and connected via an internal pedestrian network to the entrance of the principal structure.

F. Lighting.

1. All lighting within Development Area A shall meet the standards as set forth within the Green Bay Zoning Code, Article V of the Green Bay Municipal Code.
2. Lighting within Development Area B shall be limited to full cutoff lighting ground and building mounted lighting no greater than 15 feet high as measured from grade to the bottom of the light fixture. Low level bollard lighting is encouraged in Development Area B and may be a non-cutoff fixture but limited to a maximum of five (5) feet in height from grade.
   a. Lighting shall be timed so that light levels are no greater than 0.25 foot-candles at any property line adjoining residential use between the hours of 10 p.m. and 7 a.m.

G. Signage. All signage within the PUD area shall meet the standards of the C2 Highway Commercial Zoning District, as set forth within Chapter 30 of the

Green Bay Municipal Code.

1. No signage other than non-illuminated directional signage shall be directed to the west or south of the subject property.

H. Refuse and Mechanical Equipment. Screening of refuse material containers and mechanical equipment throughout the PUD area shall meet the standards as set forth within the Green Bay Zoning Code, Article XIX of the Green Bay Municipal Code.

I. Landscaping and Transitional Yards. Landscaping within the PUD area shall meet the standards as set forth within the Green Bay Zoning Code, Article XIX of the Green Bay Municipal Code with the following addition:

1. Increased level of buffering shall include the installation of a 6 to 8 foot-tall fully opaque fence as well as double the required plant materials described in Section 44-1964.
2. Buffer landscaping shall be installed and maintained along the entire west property line, south property line and the entirety of Development Area B where adjacent to property zoned residentially zoned or used for residential purposes.

J. Stormwater Management and Grading. A storm water management and grading plan meeting the standards established by the Department of Public Works shall be submitted to and approved by the City prior to the issuance of building permits.

1. Stormwater management areas such as bioretention areas, rain gardens, stormwater trees, or other plantings are encouraged.

K. Compliance with all the regulations of the Green Bay Municipal Code not otherwise addressed within the PUD.

**SECTION 3.** The provisions of this ordinance, including, without limitation, the granting of a conditional-use permit and all obligations, conditions, restrictions, and limitations related thereto shall run with and be jointly and severally binding upon the fee simple owner and the beneficial owner of all or any portion of the subject property. All obligations, requirements, and rights of the owner shall run with the land and shall automatically be assigned to be binding upon and inure to the benefit of its successors and assigns, including, but not limited to, any entity acquiring any financial interest in the subject property and/or any subsequent owner and/or beneficial owner of all or any portion of the subject property.

**SECTION 4.** Each exhibit which is attached to this ordinance is deemed to be and is expressly made a part of and incorporated into this ordinance to the same extent as if each such exhibit, and the plans identified therein, had been set forth in its entirety in the body of this ordinance.

**SECTION 5.** All ordinances or parts of ordinances in conflict herewith are hereby repealed.

**SECTION 6.** In addition to all other remedies available to the City of Green Bay, the City may decline to issue any building or other permits otherwise required by any ordinance of this City while any violation of this ordinance remains uncured.

**SECTION 7.** If any provision in this ordinance is held invalid or unconstitutional by any court of competent jurisdiction, such a decision shall not affect the validity of any other provision of this ordinance. It is hereby declared to be the intention of the City of Green Bay that all provisions of this ordinance are separable.

**SECTION 8.** This ordinance shall not take effect until a public hearing is held thereon as provided by Chapter 44, Article II, Division 2, Section 44-82 Zoning Amendments, Green Bay Municipal Code, and the adoption and publication of this ordinance.

Dated at Green Bay, Wisconsin, this _____ day of _____, 2023.

APPROVED:

_____
Eric Genrich, Mayor

ATTEST:

_____
Celestine Jeffreys, City Clerk

db:

**Attachments:**
Exhibit A – Location Map
Exhibit B - Development Areas & Conceptual Site Plan
Exhibit D – Conceptual Building Elevations

Proposed PUD

400' Property Owner Notice

This is a compilation of records and data located in various City of Green Bay offices and is to be used for reference purposes only. The City of Green Bay is not responsible for any inaccuracies or unauthorized use of the information contained within. No warranties are implied.
Map prepared by DB

**Zoning Petition (ZP 23-05)**
**Proposed Planned Unit Development (PUD) at 1577 Langlade Avenue**

CITY OF GREEN BAY 1854 Titletown, USA

# EXHIBIT B-Development Areas & Concept Plan

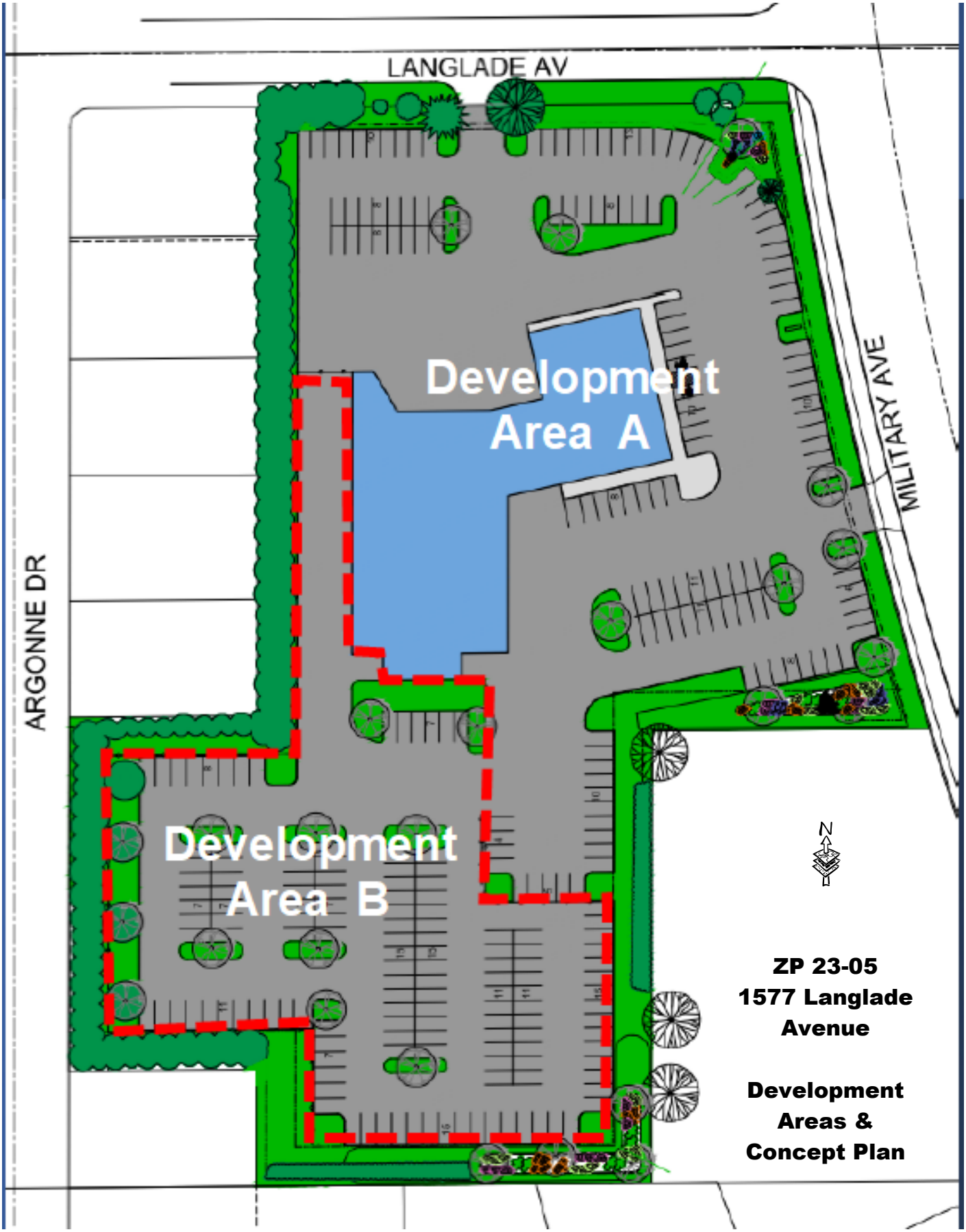

# EXHIBIT C-Conceptual Building Elevations

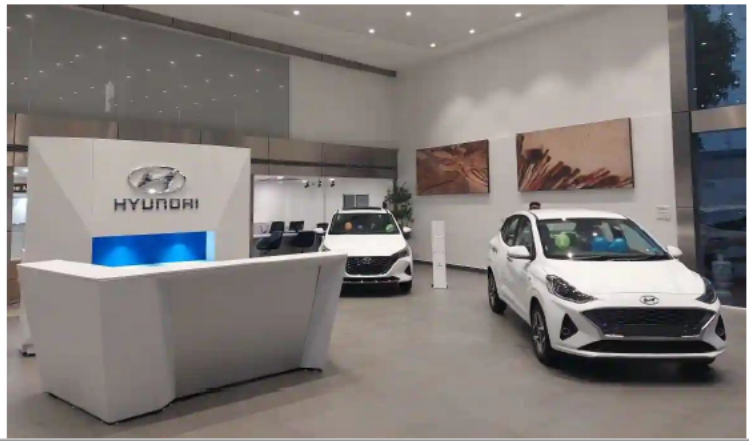

Report to the
# Finance Committee of the City of Green Bay

| MEETING DATE | PREPARED BY |
|---|---|
| March 21, 2023 | |

## AGENDA ITEM # P.1

To approve the reimbursement of the City portion of taxes only, excluding the pavement special assessment, for the parcels identified by the Assessor that would have met the exemption requirement had the request been submitted by the deadline. Parcels include 14-426 (612 Stuart St) and 14-410-A (618 Stuart St) for St. John Evangelist Homeless Shelter Inc for a total reimbursement of $5,356.64 from 2023 contingency account.

## BACKGROUND

2022 Tax bill

St. John's : 14-426 (612 Stuart)

| | |
|---|---|
| City of Green Bay's portion | $4,900.97 |
| Northeast WI Tech portion | $449.07 |
| GB Area Public School portion | $4,550.06 |
| Brown County portion | $2,175.78 |
| | $12,075.88 |
| Lottery Credit | ($68.03) |
| Special assessment/street imp | $484.38 |
| Total tax bill | $12,492.23 |

St. John's : 14-410-A (618 Stuart – parking lot)

| | |
|---|---|
| City of Green Bay's portion | $455.67 |
| Northeast WI Tech portion | $41.75 |
| GB Area Public School portion | $423.05 |
| Brown County portion | $202.30 |
| | $1,122.77 |
| Lottery Credit | ($68.03) |
| Total tax bill | $1,054.74 |

## RECOMMENDATION

## FISCAL IMPACT

## ATTACHMENTS

1. St John's recommendation for parcel 14-426 and 14-410-A

February 23, 2023

TO: Finance Committee

FROM: Russ Schwandt, City Assessor

RE: John's (Parcels 14-410, 14-410-A, & 14-426)

I have reviewed the exemption request for St. John's submitted 2/16/2023.

Parcel 14-410 is an empty lot used only for green space across the alley from the center. It wasn't eligible for tax exemption as of 1/1/2022 because it was not being used for exempt purposes as of the Statutory date and still is not.

Parcel 14-410-A is a parking lot used for St John's shuttle and staff parking. This property would have been exempt had the form been submitted as required.

Parcel 14-426 is the Micah Center used for training, support groups, computer lab, case management, and administrative offices. This property would have been exempt had the proper form been submitted as required.

The State Statutes are very clear, failure to submit an exemption request to the local Assessor, by the March 1st deadline, automatically prevents the entity from gaining the exemption. St John's owns two other exempt properties in the City, so the exemption process should not be unfamiliar to them.

Failure to follow the law as dictated by State Statute results in the proper denial of an exemption request as was done in this instance. Forgiving taxes for not following proper procedure only increases the tax burden for those who have.

# RESOLUTION AUTHORIZING TRANSFER OF FUNDS

## March 21, 2023

BY THE COMMON COUNCIL OF THE CITY OF GREEN BAY, RESOLVED:

Pursuant to the recommendation of the Finance Committee at its meeting of March 14, 2023, the following 2023 transfer of funds is hereby authorized:

| | ACCOUNT | | AMOUNT |
|---|---|---|---|
| From: | 101099-59001 | Contingency | $5,356.64 |
| To: | 101102-59003 | Assessors-Tax Adjustments | $5,356.64 |

This budget amendment is for the City's portion of property taxes for St. John's (parcel 14-426 for $4,900.97 and 14-410-A for $455.67) for total of $5,356.64.

Adopted _____

Approved _____

_____
Mayor

_____
Clerk

Report to the
# Finance Committee of the City of Green Bay

| MEETING DATE | PREPARED BY |
|---|---|
| March 21, 2023 | |

## AGENDA ITEM # P.2

To deny the reimbursement of the City portion of taxes, for parcel 14-410 (304 S Quincy St) for St. John Evangelist Homeless Shelter Inc as identified by the Assessor as not meeting the exemption requirements regardless of deadline.

## BACKGROUND

2022 Tax bill

St. John's : 14-410 (304 S Quincy – empty grass lot)

| | |
|---|---|
| City of Green Bay's portion | $112.97 |
| Northeast WI Tech portion | $10.35 |
| GB Area Public School portion | $104.88 |
| Brown County portion | $50.15 |
| | $278.35 |
| Special assessment/street imp | $277.51 |
| Total tax bill | $555.86 |

## RECOMMENDATION

## FISCAL IMPACT

## ATTACHMENTS

1. Assessor memo - St John's exempt status

February 23, 2023

TO: Finance Committee

FROM: Russ Schwandt, City Assessor

RE: John's (Parcels 14-410, 14-410-A, & 14-426)

I have reviewed the exemption request for St. John's submitted 2/16/2023.

Parcel 14-410 is an empty lot used only for green space across the alley from the center. It wasn't eligible for tax exemption as of 1/1/2022 because it was not being used for exempt purposes as of the Statutory date and still is not.

Parcel 14-410-A is a parking lot used for St John's shuttle and staff parking. This property would have been exempt had the form been submitted as required.

Parcel 14-426 is the Micah Center used for training, support groups, computer lab, case management, and administrative offices. This property would have been exempt had the proper form been submitted as required.

The State Statutes are very clear, failure to submit an exemption request to the local Assessor, by the March 1st deadline, automatically prevents the entity from gaining the exemption. St John's owns two other exempt properties in the City, so the exemption process should not be unfamiliar to them.

Failure to follow the law as dictated by State Statute results in the proper denial of an exemption request as was done in this instance. Forgiving taxes for not following proper procedure only increases the tax burden for those who have.

Report to the
# Finance Committee of the City of Green Bay

| MEETING DATE | PREPARED BY |
|---|---|
| March 21, 2023 | |

## AGENDA ITEM # P.3

To deny the reimbursement of the City portion of taxes, for parcel 5-1523-1 (610 N Broadway) for N.E.W. Community Clinic as identified by the Assessor as not meeting the exemption requirements regardless of deadline.

## BACKGROUND

2022 Tax bill

N.E.W. Community Clinic:

| | |
|---|---|
| City of Green Bay's portion | $4,904,.76 |
| Northeast WI Tech portion | $ 449.41 |
| GB Area Public School portion | $4,553.58 |
| Brown County portion | $2,177.46 |
| | $12,085.21 |
| Lottery Credit | ($68.03) |
| Total tax bill | $12,017.18 |

## RECOMMENDATION

## FISCAL IMPACT

## ATTACHMENTS

1. Assessor memo - N.E.W Community clinic

February 23, 2023

TO: Finance Committee

FROM: Russ Schwandt, City Assessor

RE: N.E.W. Community Clinic Exemption (Parcel 5-1523-1)

I have reviewed the exemption request for the Clinic submitted 2/16/2023.

The building was only partially complete as of 1/1/2022 and therefor would not have been granted an exemption for 2022 even if they had gotten the request in. It was not being used for exempt purposes as of the Statutory date.

The State Statutes are very clear, failure to submit an exemption request to the local Assessor, by the March 1st deadline, automatically prevents the entity from gaining the exemption. This is the third property N.E.W. owns in the City, so the process should not be unfamiliar to them.

Report to the
# Finance Committee of the City of Green Bay

| MEETING DATE | PREPARED BY |
| --- | --- |
| March 21, 2023 | |

## AGENDA ITEM # P.4

To purchase camera and related equipment for the GBPD Investigative Division from Foster + Freeman for $37,341.91.

## BACKGROUND

## RECOMMENDATION

To Approve

## FISCAL IMPACT

## ATTACHMENTS

1. REQ #47 Crime Scene Light-Camera Specs and Sole Source 1013150-55140 2023 Budget 3-8-23

Green Bay Police Department

2023 Budget Funds

Requisition #47

Department Contact for this Requisition: Captain Jeffrey Brester @ 7529

Specs and Sole Source for Crime Scene Light/Camera

Actual Cost: $37,341.91

Account Number: 1013150-55140 Approved 2023 Budget Funds ($40,000)

Created and Approved by Rick Jurkanis 3/8/23

Note:

-
- Please review specs attached with Jeffrey Brester before issuing purchase order.
- Quote to include all freight/shipping costs.
- Total approved budget through 2023 Budget Funds is $40,000.
- Vendor is Foster and Freeman USA Inc.

**City of Green Bay, Wisconsin**
**REQUEST FOR APPROVAL OF "NO SUBSTITUTE" PURCHASE SPECIFICATION**

**TO : Purchasing Division/Administrative Services** **DATE:** *02/02/23*

**FROM: Department/Division** *Police Department* **REQUISITION #** 47

**List "No Substitute" Item(s) here:**

*Crime Scene Light/Camera*

**Select One:**

- [x] 1) One Time Purchase Estimated Cost: $ *$37,342*
- [ ] 2) Annual Commodity purchase: Estimated annual cost: $
- [ ] 3) Item may be purchased again: Indicate term: Estimated Annual Cost: $

Example: 1 year, indefinite, etc. Long term requests will be reevaluated periodically)

**We request approval of a "NO SUBSTITUTE" specification for the purchase of the subject item(s)**
**Check appropriate justification(s). Provide DETAILED explanation(s) below.**

- [x] 1. Sole Source – The below signed has searched the market and verified that no comparable item is available.
- [ ] 2. Single Source – Although comparable items are available, THIS is the only brand/model that will work.
- [ ] 3. Item(s) is (are) only acceptable replacement part(s) known for _____ (Identify)
- [ ] 4. Continuity of design is overriding consideration (ex: playground equipment or street furniture)
- [ ] 5. Safety:
- [ ] 6. Other:

*Explanations shall contain sufficient information and justification for the items to be considered and approved as "NO SUBSTITUTE" items. Failure to do so will result in the request being denied and returned to the originator.

*Recommending Department Head will be available to defend said recommendation to the appropriate City Committee and/or Common Council.

**PLEASE EXPLAIN YOUR REASONS FOR THIS REQUEST** (additional info may be attached on a separate sheet):

*After extensive research, this is he only crime scene light/camera we found on the market which meets our needs. The only company who makes/sells the product is Foster and Freeman USA INC.. Purchase is funded through approved 2023 Budget funds ($40,000)(1013150-55140). Please see attached supporting documentation for details. GBPD contact is Captain Jeffrey Brester. Please review specs with Captain Brester before issuing the purchase order.*

**Approvals:**

Requestor: Date: 2/2/23

Department Head: Date: 02/02/2023

Purchasing Manager: Date:

**INTEROFFICE MEMORANDUM**
**GREEN BAY POLICE DEPARTMENT**

January 20, 2023

**To:** Business Manager Rick Jurkanis

**From:** Captain Jeff Brester

**Re:** Purchase of forensic equipment

Mr. Jurkanis,

I have attached the paperwork for the purchase of a camera and related equipment for the Green Bay Police Department Investigative Division as a sole source purchase. The specs of this equipment are specifically related to the job duties and requirements of our forensic unit. We have researched the product and have been unable to locate another manufacturer to provide the equipment as needed.

Based on this, I would request the purchase be approved from Foster and Freeman USA INC.

Contact me with any questions.

Thank you

Capt. Jeff J Brester

Captain Jeffrey J Brester

foster+freeman
FORENSIC SCIENCE INNOVATION

**20145 Ashbrook Place**
**Suite 190**
**Ashburn VA 20147**
**Tel: 888 445 5048**
**Fax: 888 445 5049**
**www.fosterfreeman.com**

January 17, 2023

Green Bay Police Department
307 S. Adams St.
Green Bay, WI 54301

Shelly Czarneski,

**Re. Sole Source justification for Crime-lite® AUTO**

I am pleased to confirm that the Crime-lite® AUTO is manufactured by and only available from Foster & Freeman.

The AUTO design is based upon Crime-lite® technology. Combining a full-spectrum UV-Vis-IR camera and 55 illumination wavebands, the Crime-lite® AUTO is a complete evidence search and capture tool for Crime Scene and Laboratory. We are not aware of any equivalent unit available.

Some of the key features include:

- Multi-spectral LED illumination, providing up to 55 wavelength combinations.
- 20-megapixel camera, sensitive from UV to infrared.
- Extending arms for wide-angle UV, White, and Infrared illumination.
- Multiple lighting and filter combinations to capture different types of evidence.
- Motorized filter wheel with intelligent filter selection at 9 positions.
- Integrated 7" tilt able touchscreen.
- Advanced connectivity with Bluetooth, Micro SD, USB, and HDMI.
- Nine illumination wavebands. (UV, Violet, Blue, Blue Green, Green, Orange, Red, White, and IR)
- Autofocus macro lens, produces high resolution still images suitable for fingerprint comparisons.
- HDMI live video output.
- External, lightweight rechargeable Lithium ion battery pack with a 2-3 hour run time.
- Lightweight design, approx 1.6 kg (3.5 Pounds)
- To avoid destroying DNA evidence and for operator safety, the unit does not emit shortwave UV.

Please let me know if we can be of any further assistance

Yours sincerely,
Nathan Carey
Technical Sales Specialist

® *Crime-lite is a registered trademark of Foster & Freeman.*

foster+freeman
FORENSIC SCIENCE INNOVATION

FOSTER+FREEMAN USA INC.
20145 ASHBROOK PLACE #190
ASHBURN, VA 20147
T: 888 445 5048
F: 888 445 5049
usoffice@fosterfreeman.com

Federal Tax ID No. 56-2316854
GST/HST No. 81939 6300 RT0001
www.fosterfreeman.com

**Your Reference:** RFQ -CRIME LITE AUTO

**Our Reference:** C102356

**Quote Reference:** Q211445

**Date:** January 6, 2023



Green Bay Police Dept.
307 S. Adams St.
Green Bay
WI 54301
USA

Attention of Shelly Czarneski

**QUOTATION Q211445 - FOR THE SUPPLY OF:**

| LINE | PRODUCT DESCRIPTION | QTY | UNIT PRICE | SUB TOTAL |
|---|---|---|---|---|
| 1 | **CL AUTO KIT 120V CHARGER (QCL/AUTO/KIT120V)** | 1 | 30,142.82 | 30,142.82 |
| 2 | **CRIME-LITE AUTO OBLIQUE LIGHTING RING ACCESSORY (QCL/AUTO/ACC/9)**<br>- Oblique ring light accessory for use with CRIME-LITE AUTO<br>- 5700K White OR UV 365nm (Software selectable – one at a time)<br>- 12 LEDs per wavelength<br>- Intensity control<br>- Lighting direction control – Quadrant selection<br>- Quadrant, wavelength and brightness controls appear on CRIME-LITE AUTO screen when connected. | 1 | 1,429.63 | 1,429.63 |
| 3 | **CRIME-LITE AUTO COAX LIGHTING ACCESSORY (QCL/AUTO/ACC/10)**<br>- Clip-on accessory module for Crime-lite Auto<br>- 5700K diffuse white coaxial light<br>- On-screen 'on-axis' and 'off-axis' illumination mode control (0-9 )<br>- On-screen illumination intensity control<br>- On-screen focus adjustment<br>- Powered via USB connection to Crime-lite AUTO | 1 | 1,763.21 | 1,763.21 |
| 4 | **INTERACTIVE EVIDENCE SAMPLE KIT (QCL/AUTO/INT-SAMPLES)**<br>Video presentation box for Crime-lite Sample Kit.<br>Custom-made video box with integral 7" HD screen and two foam inserts to accommodate up to 20 evidence samples.<br>Video Screen:<br>- 7" HD display<br>- Pre-loaded video content<br>- Re-chargeable Li-Ion batteries<br>- Approximately 2-hours runtime | 1 | 1,956.25 | 1,956.25 |

foster+freeman
FORENSIC SCIENCE INNOVATION

FOSTER+FREEMAN USA INC.
20145 ASHBROOK PLACE #190
ASHBURN, VA 20147
T: 888 445 5048
F: 888 445 5049
usoffice@fosterfreeman.com

Federal Tax ID No. 56-2316854
GST/HST No. 81939 6300 RT0001
www.fosterfreeman.com

**Your Reference:** RFQ -CRIME LITE AUTO

**Our Reference:** C102356

**Quote Reference:** Q211445

**Date:** January 6, 2023



ACCELERANT (SIMULATED) (QCL/SAMPLE/A)
- Accelerant (simulated) on blue fabric to be used with blue light source (495nm LP or 530nm BP filter), blue-green light source (550nm LP or 550nm BP filter) or green light source (590nm LP filter) light source

FLUORESCENT FINGERMARK (QCL/SAMPLE/B)
- Fluorescent fingermark (plastic sample box) to be used with UV light source (visible pass or 420nm LP filter), violet light source (455nm LP), blue light source (495nm or 530nm BP filter), blue-green light source (550nm LP or 550nm BP filter) or green light source (590nm LP filter)

POLYCYANO FINGERMARK (QCL/SAMPLE/C)
- Polycyano (plastic bag) to be used with UV light source (visible pass or 420nm LP filter)

TEXTILE FIBRES (QCL/SAMPLE/D) (QCL/SAMPLE/D)
- Textile Fibres (green fabric with fibres) to be used with violet light source (455nm LP filter), blue light source (495nm LP or 530nm BP filter) or blue-green light source (550nm LP or 550nm BP filter)

GENERAL DEBRIS (QCL/SAMPLE/E)
- Debris to be used with UV light source (visible pass or 420nm LP filter), violet light source (455nm LP filter), blue light source (495nm LP or 530nm BP filter), blue-green light source (550nm LP or 550nm BP filter) or green light source (590nm LP filter)

FOOTWEAR MARK (GEL LIFT) (QCL/SAMPLE/F)
- Footwear mark (gel lift) with white light source with visible pass filter

BODY FLUID (SIMULATED) (QCL/SAMPLE/G)
- Body fluid (simulated) on white fabric with black backing to be used with UV light source (visible pass or 420nm LP filter), violet light source (455nm LP filter), blue light source (495nm LP or 530nm BP filter) or blue-green light source (550nm LP or 550nm BP filter)

DRUGS SAMPLE (SIMULATED) (QCL/SAMPLE/H)
- Drugs (simulated) in tiny grip seal polybag to be used with UV light source (visible pass or 420nm LP filter) or violet light source (455nm LP filter)

BODY FLUID (SIMULATED) (QCL/SAMPLE/I)
- Body fluid (simulated) on black cotton to be used with UV light source (visible pass or 420nm LP filter), violet light source (455nm LP filter), blue light source (495nm LP or 530nm BP filter) or blue-green light source (550nm LP or 550nm BP filter)

BODY FLUID (SIMULATED) (QCL/SAMPLE/J)

foster+freeman
FORENSIC SCIENCE INNOVATION

FOSTER+FREEMAN USA INC.
20145 ASHBROOK PLACE #190
ASHBURN, VA 20147
T: 888 445 5048
F: 888 445 5049
usoffice@fosterfreeman.com

Federal Tax ID No. 56-2316854
GST/HST No. 81939 6300 RT0001
www.fosterfreeman.com

**Your Reference:** RFQ -CRIME LITE AUTO

**Our Reference:** C102356

**Quote Reference:** Q211445

**Date:** January 6, 2023



- Body fluid (simulated) on pink and black patterned fabric to be used with UV light source (420nm LP filter), violet light source (455nm LP), blue light source (495nm or 530nm BP filter) or blue-green light source (550nm LP or 550 BP filter) – demonstrates use of bandpass for best visualisation

CYANOACRYLATE FINGERMARK (QCL/SAMPLE/K)
- Cyanoacrylate fingermark on plastic grip-seal bag to be used with UV light source (330-385nm BP filter)

Fp NATURAL 1 FINGERMARK (QCL/SAMPLE/L)
- Fp Natural 1 fingermark on aluminium foil to be used with blue light source (715 or 780nm LP filter) or red light source (715nm or 780nm LP filter)

Fp NATURAL 2 FINGERMARK (QCL/SAMPLE/M)
- Fp Natural 2 fingermark on wrapping paper to be used with red light source (715nm or 780nm LP filter) or IR light source (850nm filter)

NINHYDRIN FINGERMARK (SIMULATED) (QCL/SAMPLE/N)
- Ninhydrin fingermark (simulated) on green cardboard with green light source and visible pass filter for colour-contrast imaging

BLOOD STAIN SIMULATED (QCL/SAMPLE/O)
- Blood stain (simulated) on black with red pattern fabric to be used with IR light source (IR pass filter to block out visible light either 715nm or 780nm LP filter)

GUNSHOT RESIDUE SAMPLES (SIMULATED) (QCL/SAMPLE/P)
- GSR (simulated) on black fabric with white backing to be used with IR light source (IR pass filter to block out visible light either 715nm or 780nm LP filter)

BLOOD STAIN (SIMULATED) (QCL/SAMPLE/Q)
- Blood stain (simulated) on red patterned fabric to be used with IR light source (IR pass filter to block out visible light either 715nm or 780nm LP filter)

PAINT (QCL/SAMPLE/R)
- Paint on cardboard – two paints; midnight sapphire (blue) under dark angel (purple) on top to be used with IR light source (IR pass filter to block out visible light either 715nm or 780nm LP filter)

3D FINGERMARK (OBLIQUE ACCESSORY) (QCL/SAMPLE/S)
- Oblique (3D fingermark in mikrosil) with white light source and visible filter or UV light source (visible pass or 420nm LP filter) with oblique accessory for the CL Auto only.

foster+freeman
FORENSIC SCIENCE INNOVATION

FOSTER+FREEMAN USA INC.
20145 ASHBROOK PLACE #190
ASHBURN, VA 20147
T: 888 445 5048
F: 888 445 5049
usoffice@fosterfreeman.com

Federal Tax ID No. 56-2316854
GST/HST No. 81939 6300 RT0001
www.fosterfreeman.com

**Your Reference:** RFQ -CRIME LITE AUTO

**Our Reference:** C102356

**Quote Reference:** Q211445

**Date:** January 6, 2023



| | | | | |
|---|---|---|---|---|
| | RECOVER FINGERMARK (COAXIAL ACCESSORY) (QCL/SAMPLE/T)<br>- Coaxial (brass plate) – Recover fingermark to be used with white light source and visible pass filter with coaxial accessory for the CL Auto only.<br><br>PRINTED INSTRUCTION MANUAL STORED IN THE SAMPLE BOX FOR EASY REFERENCE | | | |
| 5 | **PRODUCT TRAINING**<br>1-day site visit by Foster & Freeman Applications Specialist. Includes unpacking and setup of equipment, followed by comprehensive operator training and optional testing. Training will cover both theory and practical applications, using realistic samples and scenarios. Equipment safety and maintenance will also be covered. Training and testing certificates provided. Costs are based on a single visit and include associated expenses for the Applications Specialist. | 1 | 1,850.00 | 1,850.00 |
| 6 | **SHIPPING AND HANDLING** | 1 | 200.00 | 200.00 |

foster+freeman
FORENSIC SCIENCE INNOVATION

FOSTER+FREEMAN USA INC.
20145 ASHBROOK PLACE #190
ASHBURN, VA 20147
T: 888 445 5048
F: 888 445 5049
usoffice@fosterfreeman.com

Federal Tax ID No. 56-2316854
GST/HST No. 81939 6300 RT0001
www.fosterfreeman.com



**Your Reference:** RFQ -CRIME LITE AUTO

**Our Reference:** C102356

**Quote Reference:** Q211445

**Date:** January 6, 2023

| | | | | |
|---|---|---|---|---|
| **TOTAL PRICE** | **USD** | | **37,341.91** | |
| **TOTAL TAX** | **USD** | **@ 5.5%** | **2,053.81** | N/A |
| **TOTAL VALUE** | **USD** | | **39,395.72** | |

**DESPATCH PERIOD:**

6-8 working weeks from receipt of order, subject to terms of payment details below. **Please note** despatch times are estimates and will be confirmed at time of order acknowledgement.

**TERMS OF DELIVERY:**

This price covers delivery including customs clearance, duties and local delivery and includes local sales tax.

**TERMS OF PAYMENT:**

Nett 30 Days from date of invoice Please note that a surcharge of 3% will apply to all credit card payments

**BANK DETAILS:**

United Bank, McLean, VA. Routing No 056004445, Foster & Freeman USA Inc., Account No. 70061289

**WARRANTY:**
One year from date of receipt

**VALIDITY UNTIL:**
April 6, 2023

**SIGNED:** Nathan Carey

Foster & Freeman Ltd. terms and conditions of sale apply.

foster+freeman
FORENSIC SCIENCE INNOVATION

FOSTER+FREEMAN USA INC.
20145 ASHBROOK PLACE #190
ASHBURN, VA 20147
T: 888 445 5048
F: 888 445 5049
usoffice@fosterfreeman.com

Federal Tax ID No. 56-2316854
GST/HST No. 81939 6300 RT0001
www.fosterfreeman.com

**Your Reference:** RFQ- CRIME LITE AUTO

**Our Reference:** C102356

**Quote Reference:** Q212199

**Date:** February 23, 2023



Green Bay Police Dept.
307 S. Adams St.
Green Bay
WI 54301
USA

Attention of Shelly Czarneski

**QUOTATION Q212199 - FOR THE SUPPLY OF:**

| LINE | PRODUCT DESCRIPTION | QTY | UNIT PRICE | SUB TOTAL |
|---|---|---|---|---|
| 1 | **CL AUTO KIT 120V CHARGER (QCL/AUTO/KIT120V)** | 1 | 30,142.82 | 30,142.82 |
| 2 | **CRIME-LITE AUTO OBLIQUE LIGHTING RING ACCESSORY (QCL/AUTO/ACC/9)**<br>- Oblique ring light accessory for use with CRIME-LITE AUTO<br>- 5700K White OR UV 365nm (Software selectable – one at a time)<br>- 12 LEDs per wavelength<br>- Intensity control<br>- Lighting direction control – Quadrant selection<br>- Quadrant, wavelength and brightness controls appear on CRIME-LITE AUTO screen when connected. | 1 | 1,429.63 | 1,429.63 |
| 3 | **CRIME-LITE AUTO COAX LIGHTING ACCESSORY (QCL/AUTO/ACC/10)**<br>- Clip-on accessory module for Crime-lite Auto<br>- 5700K diffuse white coaxial light<br>- On-screen 'on-axis' and 'off-axis' illumination mode control (0-9 )<br>- On-screen illumination intensity control<br>- On-screen focus adjustment<br>- Powered via USB connection to Crime-lite AUTO | 1 | 1,763.21 | 1,763.21 |
| 4 | **INTERACTIVE EVIDENCE SAMPLE KIT (QCL/AUTO/INT-SAMPLES)**<br>Video presentation box for Crime-lite Sample Kit.<br>Custom-made video box with integral 7" HD screen and two foam inserts to accommodate up to 20 evidence samples.<br>Video Screen:<br>- 7" HD display<br>- Pre-loaded video content<br>- Re-chargeable Li-Ion batteries<br>- Approximately 2-hours runtime | 1 | 1,956.25 | 1,956.25 |

foster+freeman
FORENSIC SCIENCE INNOVATION

FOSTER+FREEMAN USA INC.
20145 ASHBROOK PLACE #190
ASHBURN, VA 20147
T: 888 445 5048
F: 888 445 5049
usoffice@fosterfreeman.com

Federal Tax ID No. 56-2316854
GST/HST No. 81939 6300 RT0001
www.fosterfreeman.com

**Your Reference:** RFQ- CRIME LITE AUTO

**Our Reference:** C102356

**Quote Reference:** Q212199

**Date:** February 23, 2023



ACCELERANT (SIMULATED) (QCL/SAMPLE/A)
- Accelerant (simulated) on blue fabric to be used with blue light source (495nm LP or 530nm BP filter), blue-green light source (550nm LP or 550nm BP filter) or green light source (590nm LP filter) light source

FLUORESCENT FINGERMARK (QCL/SAMPLE/B)
- Fluorescent fingermark (plastic sample box) to be used with UV light source (visible pass or 420nm LP filter), violet light source (455nm LP), blue light source (495nm or 530nm BP filter), blue-green light source (550nm LP or 550nm BP filter) or green light source (590nm LP filter)

POLYCYANO FINGERMARK (QCL/SAMPLE/C)
- Polycyano (plastic bag) to be used with UV light source (visible pass or 420nm LP filter)

TEXTILE FIBRES (QCL/SAMPLE/D) (QCL/SAMPLE/D)
- Textile Fibres (green fabric with fibres) to be used with violet light source (455nm LP filter), blue light source (495nm LP or 530nm BP filter) or blue-green light source (550nm LP or 550nm BP filter)

GENERAL DEBRIS (QCL/SAMPLE/E)
- Debris to be used with UV light source (visible pass or 420nm LP filter), violet light source (455nm LP filter), blue light source (495nm LP or 530nm BP filter), blue-green light source (550nm LP or 550nm BP filter) or green light source (590nm LP filter)

FOOTWEAR MARK (GEL LIFT) (QCL/SAMPLE/F)
- Footwear mark (gel lift) with white light source with visible pass filter

BODY FLUID (SIMULATED) (QCL/SAMPLE/G)
- Body fluid (simulated) on white fabric with black backing to be used with UV light source (visible pass or 420nm LP filter), violet light source (455nm LP filter), blue light source (495nm LP or 530nm BP filter) or blue-green light source (550nm LP or 550nm BP filter)

DRUGS SAMPLE (SIMULATED) (QCL/SAMPLE/H)
- Drugs (simulated) in tiny grip seal polybag to be used with UV light source (visible pass or 420nm LP filter) or violet light source (455nm LP filter)

BODY FLUID (SIMULATED) (QCL/SAMPLE/I)
- Body fluid (simulated) on black cotton to be used with UV light source (visible pass or 420nm LP filter), violet light source (455nm LP filter), blue light source (495nm LP or 530nm BP filter) or blue-green light source (550nm LP or 550nm BP filter)

BODY FLUID (SIMULATED) (QCL/SAMPLE/J)

foster+freeman
FORENSIC SCIENCE INNOVATION

FOSTER+FREEMAN USA INC.
20145 ASHBROOK PLACE #190
ASHBURN, VA 20147
T: 888 445 5048
F: 888 445 5049
usoffice@fosterfreeman.com

Federal Tax ID No. 56-2316854
GST/HST No. 81939 6300 RT0001
www.fosterfreeman.com

**Your Reference:** RFQ- CRIME LITE AUTO

**Our Reference:** C102356

**Quote Reference:** Q212199

**Date:** February 23, 2023



- Body fluid (simulated) on pink and black patterned fabric to be used with UV light source (420nm LP filter), violet light source (455nm LP), blue light source (495nm or 530nm BP filter) or blue-green light source (550nm LP or 550 BP filter) – demonstrates use of bandpass for best visualisation

CYANOACRYLATE FINGERMARK (QCL/SAMPLE/K)
- Cyanoacrylate fingermark on plastic grip-seal bag to be used with UV light source (330-385nm BP filter)

Fp NATURAL 1 FINGERMARK (QCL/SAMPLE/L)
- Fp Natural 1 fingermark on aluminium foil to be used with blue light source (715 or 780nm LP filter) or red light source (715nm or 780nm LP filter)

Fp NATURAL 2 FINGERMARK (QCL/SAMPLE/M)
- Fp Natural 2 fingermark on wrapping paper to be used with red light source (715nm or 780nm LP filter) or IR light source (850nm filter)

NINHYDRIN FINGERMARK (SIMULATED) (QCL/SAMPLE/N)
- Ninhydrin fingermark (simulated) on green cardboard with green light source and visible pass filter for colour-contrast imaging

BLOOD STAIN SIMULATED (QCL/SAMPLE/O)
- Blood stain (simulated) on black with red pattern fabric to be used with IR light source (IR pass filter to block out visible light either 715nm or 780nm LP filter)

GUNSHOT RESIDUE SAMPLES (SIMULATED) (QCL/SAMPLE/P)
- GSR (simulated) on black fabric with white backing to be used with IR light source (IR pass filter to block out visible light either 715nm or 780nm LP filter)

BLOOD STAIN (SIMULATED) (QCL/SAMPLE/Q)
- Blood stain (simulated) on red patterned fabric to be used with IR light source (IR pass filter to block out visible light either 715nm or 780nm LP filter)

PAINT (QCL/SAMPLE/R)
- Paint on cardboard – two paints; midnight sapphire (blue) under dark angel (purple) on top to be used with IR light source (IR pass filter to block out visible light either 715nm or 780nm LP filter)

3D FINGERMARK (OBLIQUE ACCESSORY) (QCL/SAMPLE/S)
- Oblique (3D fingermark in mikrosil) with white light source and visible filter or UV light source (visible pass or 420nm LP filter) with oblique accessory for the CL Auto only.

foster+freeman
FORENSIC SCIENCE INNOVATION

FOSTER+FREEMAN USA INC.
20145 ASHBROOK PLACE #190
ASHBURN, VA 20147
T: 888 445 5048
F: 888 445 5049
usoffice@fosterfreeman.com

Federal Tax ID No. 56-2316854
GST/HST No. 81939 6300 RT0001
www.fosterfreeman.com

**Your Reference:** RFQ- CRIME LITE AUTO

**Our Reference:** C102356

**Quote Reference:** Q212199

**Date:** February 23, 2023



| | | | | |
|---|---|---|---|---|
| | RECOVER FINGERMARK (COAXIAL ACCESSORY) (QCL/SAMPLE/T)<br>- Coaxial (brass plate) – Recover fingermark to be used with white light source and visible pass filter with coaxial accessory for the CL Auto only.<br><br>PRINTED INSTRUCTION MANUAL STORED IN THE SAMPLE BOX FOR EASY REFERENCE | | | |
| 5 | **PRODUCT TRAINING**<br>1-day site visit by Foster & Freeman Applications Specialist. Includes unpacking and setup of equipment, followed by comprehensive operator training and optional testing. Training will cover both theory and practical applications, using realistic samples and scenarios. Equipment safety and maintenance will also be covered. Training and testing certificates provided. Costs are based on a single visit and include associated expenses for the Applications Specialist. | 1 | 1,850.00 | 1,850.00 |
| 6 | **SHIPPING AND HANDLING** | 1 | 200.00 | 200.00 |

foster+freeman
FORENSIC SCIENCE INNOVATION

FOSTER+FREEMAN USA INC.
20145 ASHBROOK PLACE #190
ASHBURN, VA 20147
T: 888 445 5048
F: 888 445 5049
usoffice@fosterfreeman.com

Federal Tax ID No. 56-2316854
GST/HST No. 81939 6300 RT0001
www.fosterfreeman.com



**Your Reference:** RFQ- CRIME LITE AUTO

**Our Reference:** C102356

**Quote Reference:** Q212199

**Date:** February 23, 2023

| | | |
|---|---|---|
| **TOTAL PRICE** | **USD** | **37,341.91** |
| **TOTAL TAX** | **USD** | **0.00** |
| **TOTAL VALUE** | **USD** | **37,341.91** |

**DESPATCH PERIOD:**

8-10 working weeks from receipt of order, subject to terms of payment details below. **Please note** despatch times are estimates and will be confirmed at time of order acknowledgement.

**TERMS OF DELIVERY:**

This price covers delivery including customs clearance, duties and local delivery, but excludes local sales tax.

**TERMS OF PAYMENT:**

Nett 30 Days from date of invoice  Please note that a surcharge of 3% will apply to all credit card payments

**BANK DETAILS:**

United Bank, McLean, VA. Routing No 056004445, Foster & Freeman USA Inc., Account No. 70061289

**WARRANTY:**
One year from date of receipt

**VALIDITY UNTIL:**
April 6, 2023

**SIGNED:** Nathan Carey

Foster & Freeman Ltd. terms and conditions of sale apply.

Report to the
# Finance Committee of the City of Green Bay

| MEETING DATE | PREPARED BY |
| --- | --- |
| March 21, 2023 | |

## AGENDA ITEM # P.5

To approve the resolution of financial institutions the City does business with.

## BACKGROUND

As part of the City's Investment Policy every 1-2 years a list of qualified institutions authorized to be public depositories shall be brought forward to the Finance Committee for review and recommendation to Council.

## RECOMMENDATION

To approve the resolution.

## FISCAL IMPACT

## ATTACHMENTS

1. Banking Depositories-2023

# RESOLUTION DESIGNATING PUBLIC DEPOSITORIES AND AUTHORIZING WITHDRAWAL OF CITY MONEYS

Green Bay, Wisconsin
March 21, 2023

BY THE COMMON COUNCIL OF THE CITY OF GREEN BAY, RESOLVED:

That each of the following banks:

| | |
|---|---|
| Associated Bank | First Business Bank |
| Bank First | JP Morgan Chase |
| BMO Harris | Local Government Investment Pool (LGIP) |
| BNY Mellon\|Pershing LLC (Ehlers)* | Nicolet National |
| Community First Credit Union | US Bank |

**New addition*

(the "Bank"), is qualified as a public depository under Chapter 34, Wisconsin Statutes, is hereby designated as a depository in which the funds of this Municipality may from time to time be deposited; that specifically described account(s) may be opened and maintained in the name of this Municipality with the Bank subject to the rules and regulations of the Bank from time to time in effect; that the person(s) and the number thereof designated by title opposite the specific designation of account(s) shall be authorized, for and on behalf of this Municipality, to sign order checks as provided in Section 66.042, Wis Stat., for payment or withdrawal of money from said account(s) and to issue instructions regarding the same and to endorse for deposit, negotiation, collection or discount by Bank any and all checks, drafts, notes, bills, certificates of deposit or other instruments or orders for the payment of money owned or held by said Municipality; that the endorsement for deposit may be in writing, by stamp, or otherwise, with or without designation of signature of the person so endorsing; and that any officer, agent or employee of this Municipality is hereby authorized to make oral or written requests of the Bank for the transfer of funds or money between accounts maintained by the Municipality at the Bank.

FURTHER RESOLVED, that the Bank be and is hereby authorized and directed to honor, certify, pay and charge to any of the accounts of this Municipality, all order checks for the payment, withdrawal or transfer of funds or money deposited in these accounts or to the credit of this Municipality for whatever purpose or to whomever payable, including requests for conversion of such instruments into cash as well as for deduction from and payment of cash out of any deposit, and whether or not payable to, endorsed or negotiated by or for the credit of any persons signing such instrument or payable to or for the credit of any other officer, agent or employee of this Municipality, when signed, accepted, endorsed or approved as evidenced by original or facsimile signature by the person(s), and the number thereof, designated by title opposite the designation of the accounts described in the foregoing resolution, and to honor any request(s) made in accordance with the foregoing resolution, whether written or oral, and including but not limited to, request(s) made by telephone or other electronic means, for the transfer of funds or money between accounts maintained by this Municipality at the Bank, and the Bank shall not be required or under any duty to inquire as to the circumstances of the issuance or use of any such instrument or request or the application or use of proceeds thereof.

FURTHER RESOLVED, that the Bank be and is hereby authorized to comply with any process, summons, order, injunction, execution, distraint, levy, lien, or notice of any kind (hereafter called "Process") received by or served upon the Bank, by which, in the Bank's opinion, another person or entity claims an interest in any of these accounts and Bank may, at its option and without liability, thereupon refuse to honor orders to pay or withdraw sums from these accounts and may hold the balance therein until Process is disposed of to Bank's satisfaction.

FURTHER RESOLVED, that any one of the persons holding the offices of this Municipality which may be designated are hereby authorized (1) to receive for and on behalf of this Municipality, securities, currency or any other property of whatever nature held by, sent to, consigned to or delivered to the Bank for the account of or for delivery to this Municipality, and to give receipt therefor, and the Bank is hereby authorized to make delivery of such property in accordance herewith, (2) to sell, transfer, endorse for sale or otherwise authorize the sale or transfer of securities or any other property of whatever nature held by, sent to, consigned to or delivered to the Bank for the account of or for delivery to this Municipality, and to receive and/or apply the proceeds of any such sale to the credit of this Municipality in any such manner as he/she/they deem(s) proper, and the Bank is hereby authorized to make a sale or transfer of any of the aforementioned property in accordance herewith, and (3)

pursuant to Section 34.07, Wis. Stats., to accept such security and to execute such documents as said officer deems proper and necessary to secure the funds of this Municipality and to issue instructions regarding the same.

FURTHER RESOLVED, that this Municipality assumes full responsibility for any and all payments made or any other actions taken by the Bank in reliance upon the signatures, including facsimiles thereof, of any person or persons holding the offices of this Municipality which may be designated regardless of whether or not the use of a facsimile signature was unlawful or unauthorized and regardless of by whom or by what means the purported signature or facsimile signature may have been affixed to any instrument if such signatures resemble the specimen or facsimile signatures provided to the Bank, for refusing to honor any signatures not provided to the Bank, for honoring any requests for the transfer of funds or money between accounts or for the instructions from the persons designated in the foregoing resolutions regarding security for the accounts notwithstanding any inconsistent requirements of this Municipality not expressed in the foregoing resolutions, and that this Municipality agrees to indemnify and hold harmless the Bank against any and all claims, demands, losses, costs, damages or expenses suffered or incurred by the Bank resulting from or arising out of any such payment or other action.

FURTHER RESOLVED, that the Clerk of this Municipality be and hereby is authorized and directed to certify to the Bank the foregoing resolutions, that the provisions thereof are in conformity with law, the names, incumbencies and specimen or facsimile signature(s) on signature cards of the officer or officers named therein, and that the foregoing resolutions and signature cards and the authority thereby conferred shall remain in full force and effect until this Municipality notifies the Cashier of Bank to the contrary in writing; and the Bank may conclusively presume that such resolutions and signature cards are in effect and that the persons who may be identified from time to time as officers of the Municipality have been duly elected or appointed to and continue to hold such offices.

Adopted: _____, 2023

Approved: _____, 2023

_____
Mayor

ATTEST:

_____
City Clerk

Report to the
# Finance Committee of the City of Green Bay

| MEETING DATE | PREPARED BY |
| --- | --- |
| March 21, 2023 | |

## AGENDA ITEM # P.6

To amend 2022 budget lines.

## BACKGROUND

## RECOMMENDATION

## FISCAL IMPACT

## ATTACHMENTS

1. Combined Resolution for 3.14.23 Finance Meeting-2022 BUA's

**RESOLUTION AUTHORIZING**
**TO BUDGET AMENDMENT**

**March 21, 2023**

BY THE COMMON COUNCIL OF THE CITY OF GREEN BAY, RESOLVED:

Pursuant to the recommendation of the Finance Committee at its meeting of March 14, 2023, the following 2022 amendment of funds is hereby authorized:

| | ACCOUNT | | AMOUNT |
|---|---|---|---|
| Increase: | 101300 50501 | Police-Overtime | $5,172.95 |
| Increase: | 101300 46223 | Police Overtime Reimbursement | $5,172.95 |

***This budget amendment is for 2022 unbudgeted overtime for staffing at the Bellin Women's Half Marathon and the Great Toy Giveaway.*

| | | | |
|---|---|---|---|
| Increase: | 101400 50501 | Fire-Overtime | $106.40 |
| Increase: | 101400 46223 | Fire Overtime Reimbursement | $106.40 |

***This budget amendment is for 2022 unbudgeted overtime for staffing for the Brown County Fire Investigation Task Force.*

| | | | |
|---|---|---|---|
| Increase: | 101400 50501 | Fire-Overtime | $3,767.50 |
| Increase: | 101400 43611 | Fire-State Overtime Reimbursement | $3,767.50 |

***This budget amendment is for December 2022 unbudgeted state reimbursements of costs incurred for employees to attend USAR (Urban Search & Rescue) trainings.*

| | | | |
|---|---|---|---|
| Increase: | 101300 54051 | Police-Medical Supplies | $393.00 |
| Increase: | 101160 45110 | Muni Court-Ordinance Violations | $393.00 |

***This budget amendment is for November 2022 unbudgeted costs to offset the expenses paid to local hospitals for blood draws resulting from the police department's OWI arrests-1st offense that are collected from invoicing the person that was arrested.*

Adopted _____

Approved _____

_____
Mayor

_____
Clerk

Report to the
# Finance Committee of the City of Green Bay

| MEETING DATE | PREPARED BY |
| --- | --- |
| March 21, 2023 | |

## AGENDA ITEM # P.7

To amend 2023 budget lines.

## BACKGROUND

## RECOMMENDATION

## FISCAL IMPACT

## ATTACHMENTS

1. Combined Resolution for 3.14.23 Finance Meeting-2023 BUA's

**RESOLUTION AUTHORIZING**
**TO BUDGET AMENDMENT**

**March 21, 2023**

BY THE COMMON COUNCIL OF THE CITY OF GREEN BAY, RESOLVED:

Pursuant to the recommendation of the Finance Committee at its meeting of March 14, 2023, the following 2023 amendment of funds is hereby authorized:

| | ACCOUNT | | AMOUNT |
|---|---|---|---|
| Increase: | 101400 50501 | Fire-Overtime | $956.89 |
| Increase: | 101400 46223 | Fire Overtime Reimbursement | $956.89 |

***This budget amendment is for 2023 unbudgeted overtime for staffing for the Brown County Fire Investigation Task Force.*

| | | | |
|---|---|---|---|
| Increase: | 101400 50501 | Fire-Overtime | $2,420.00 |
| Increase: | 101400 43611 | Fire-State Overtime Reimbursement | $2,420.00 |

***This budget amendment is for January 2023 unbudgeted state reimbursements of costs incurred for employees to attend USAR (Urban Search & Rescue) trainings.*

Adopted _____

Approved _____

_____
Mayor

_____
Clerk

Report to the
# Finance Committee of the City of Green Bay

| MEETING DATE | PREPARED BY |
| --- | --- |
| March 21, 2023 | |

## AGENDA ITEM # P.8

To receive and place on file a request by Ald. Wery to the Finance Committee which states: "Request an independent/outside cyber investigation of the audio listening system at city hall to include who accessed it and when since their installation. Were any audio recordings downloaded/saved?"

## BACKGROUND

## RECOMMENDATION

## FISCAL IMPACT

## ATTACHMENTS

1. 2023-03-09 Dist 8 to Finance

**From:** noreply@civicplus.com
**To:** Celestine Jeffreys; Eric Genrich
**Subject:** Online Form Submittal: Alders" Petitions and Communications
**Date:** Thursday, March 9, 2023 8:18:19 AM

# Alders' Petitions and Communications

| | |
|---|---|
| Name | Chris Wery |
| Committee Name | Finance Committee |
| Text of Communication | Request an independent/outside cyber investigation of the audio listening system at city hall to include who accessed it and when since their installation. Were any audio recordings downloaded/saved?<br><br>Respectfully submitted,<br><br>Alderman Chris Wery |

Email not displaying correctly? View it in your browser.

Report to the
# Finance Committee of the City of Green Bay

| MEETING DATE | PREPARED BY |
| --- | --- |
| March 21, 2023 | |

## AGENDA ITEM # P.9

To approve the 2025 and 2027 community leader agreements for the NFL Draft Bid Booklets to be submitted by the Green Bay Packers.

## BACKGROUND

## RECOMMENDATION

## FISCAL IMPACT

## ATTACHMENTS

1. NFL Draft Support

Mayor's Office
100 North Jefferson Street • Room 200
Green Bay, Wisconsin 54301-5026
www.greenbaywi.gov

Phone 920.448.3005
Fax 920.448.3081

2025 Community Leader Agreement

March 21, 2023

The City of Green Bay has met with members of the National Football League (NFL) 2025 Draft Local Organizing Committee (LOC) regarding the submission of a final bid for Green Bay to host the NFL Draft in 2025.

The LOC has provided the City of Green Bay with information regarding the 2025 NFL Draft Bid Specifications.

The City of Green Bay understands the potential for this event to take place one of the three dates: April 17-19, 2025; April 24-26, 2025; or May 1-3, 2025.

The City of Green Bay (and the public entities it oversees) pledges their support and commitment to ensure the 2025 NFL Draft is a successful and smooth event. This includes agreeing to the list below:

- The host city, county, and/or state and its supporting entities must commit to generally assist the NFL and LOC in coordinating logistics for the NFL Draft, including assistance in securing additional venues, storage space, hotels, and other services and assets.
- The host city, county, and/or state must designate a dedicated point person, from each entity, to work with the NFL and the LOC throughout the planning process, both to assist in coordinating government-provided services and assets, providing PR support, and identifying and negotiating with private parties for services, venues and assets required by the NFL, LOC and its partners for NFL Draft events.
- The host city, county, and/or state must agree to seek passage of a "clean zone" ordinance (if a standing ordinance does not already exist) that prevents temporary commercial activity (e.g. temporary advertising, sampling and vending) and protects the NFL and LOC partners from competitive ambush marketing in a designated area around the key venues and hotels during the week of the NFL Draft. Additionally, the host city, county, and/or state should commit resources to enforcing the clean zone ordinance (and other applicable zoning regulations) and policing "ambush marketing" and the sale of counterfeit and illegal merchandise in and around event venues. The NFL and LOC will expect maps and legal ordinance language for legal and events review.
- The host city, county, and/or state must assist the NFL and LOC in identifying and expediting any permit applications that the NFL, LOC and/or its partners may need to file with any governmental agency in connection with the NFL Draft events. The host city, county, and/or state must provide a waiver of all permitting fees.
- The host city, county, and/or state agrees to help coordinate plans and must cover all costs related to Public Works, which may include items like city sanitation, trash collection, street cleaning, road closures, etc. during the event period. The host city, county, and/or state will only be responsible for the cost outside of the NFL secure perimeter.

- The host city, county, and/or state will be responsible to help offset any cost impacts on local businesses due to the proposed layout options in the bid and/or selected by the NFL.
- The host city, county, and/or state must agree to provide, at its cost, a post-event impact report and grant the NFL and LOC the right to use this report and its data.
- The host city, county, and/or state must cover all costs related to the deployment of city and state police, fire and emergency/medical services, street closure activities, police escort services, tactical support units and command centers required for the NFL Draft events. This includes all equipment needed for any of the above-mentioned areas, that may include vehicle message boards, site lights, signage, generators, security barriers, etc. Other deployments of public safety resources shall include but are not limited to a complete and thorough inspection of all event venues at a mutually agreeable time; explosive detection canine sweeps of any vehicles entering the secure perimeter during lockdown; uniformed armed police officers posted at all points of entry while being utilized for ingress/egress; tactical police assets as appropriate; crowd control; intelligence capabilities; motorcade/vehicle escorts; counter surveillance, investigative, mounted, motorcycle, aviation, and bicycle patrols as appropriate; airspace security resources (including counter-UAS assets, if available); local fire services; water rescue; urban search and rescue; hazmat mitigation; and mutual aid agreements resulting in support from outside police and fire services as necessary.
- The host city, county, and/or state must agree to work closely with the NFL and LOC to ensure necessary street closures are made when and where needs are identified for both partial and full closures, at no cost to the NFL or LOC. Both parties recognize that public safety remains a priority and allowing access to both private and public areas is taken into consideration when closures are requested. The host city, county, and/or state must also provide, at no cost to the NFL and LOC, any necessary equipment or material required by the NFL and LOC to prevent vehicle incursion.
- The lead law enforcement agency working with the NFL and the LOC will provide all current emergency evacuation and preparedness plans specific to the event venues being used. The NFL and LOC will work with the city and county on developing emergency preparedness plans specific to the event.
- The primary public safety agencies should designate a representative to be present in NFL Control during event hours to serve as a liaison to the event.
- The lead law enforcement agency must identify a central location to serve as the command post for public safety, transportation and logistics. This center will be staffed by decision makers from the participating public safety entities, transportation coordinators, traffic planning agency, city, county, and other municipalities, as needed. All communication will be directed through the center and it will serve as the central point of information for Draft week. This command post would preferably be equipped with camera views and communication designed to monitor traffic.

**ACKNOWLEDGED AND AGREED:**

By: _____

Name: Eric Genrich

Title: Mayor

Mayor's Office
100 North Jefferson Street • Room 200
Green Bay, Wisconsin 54301-5026
www.greenbaywi.gov

Phone 920.448.3005
Fax 920.448.3081

2027 Community Leader Agreement

March 21, 2023

The City of Green Bay has met with members of the National Football League (NFL) 2027 Draft Local Organizing Committee (LOC) regarding the submission of a final bid for Green Bay to host the NFL Draft in 2027.

The LOC has provided the City of Green Bay with information regarding the 2027 NFL Draft Bid Specifications.

The City of Green Bay understands the potential for this event to take place one of the three dates: April 15-17, 2027; April 22-24, 2027; or April 29-May 1, 2027.

The City of Green Bay (and the public entities it oversees) pledges their support and commitment to ensure the 2027 NFL Draft is a successful and smooth event. This includes agreeing to the list below:

- The host city, county, and/or state and its supporting entities must commit to generally assist the NFL and LOC in coordinating logistics for the NFL Draft, including assistance in securing additional venues, storage space, hotels, and other services and assets.
- The host city, county, and/or state must designate a dedicated point person, from each entity, to work with the NFL and the LOC throughout the planning process, both to assist in coordinating government-provided services and assets, providing PR support, and identifying and negotiating with private parties for services, venues and assets required by the NFL, LOC and its partners for NFL Draft events.
- The host city, county, and/or state must agree to seek passage of a "clean zone" ordinance (if a standing ordinance does not already exist) that prevents temporary commercial activity (e.g. temporary advertising, sampling and vending) and protects the NFL and LOC partners from competitive ambush marketing in a designated area around the key venues and hotels during the week of the NFL Draft. Additionally, the host city, county, and/or state should commit resources to enforcing the clean zone ordinance (and other applicable zoning regulations) and policing "ambush marketing" and the sale of counterfeit and illegal merchandise in and around event venues. The NFL and LOC will expect maps and legal ordinance language for legal and events review.
- The host city, county, and/or state must assist the NFL and LOC in identifying and expediting any permit applications that the NFL, LOC and/or its partners may need to file with any governmental agency in connection with the NFL Draft events. The host city, county, and/or state must provide a waiver of all permitting fees.
- The host city, county, and/or state agrees to help coordinate plans and must cover all costs related to Public Works, which may include items like city sanitation, trash collection, street cleaning, road closures, etc. during the event period. The host city, county, and/or state will only be responsible for the cost outside of the NFL secure perimeter.

- The host city, county, and/or state will be responsible to help offset any cost impacts on local businesses due to the proposed layout options in the bid and/or selected by the NFL.
- The host city, county, and/or state must agree to provide, at its cost, a post-event impact report and grant the NFL and LOC the right to use this report and its data.
- The host city, county, and/or state must cover all costs related to the deployment of city and state police, fire and emergency/medical services, street closure activities, police escort services, tactical support units and command centers required for the NFL Draft events. This includes all equipment needed for any of the above-mentioned areas, that may include vehicle message boards, site lights, signage, generators, security barriers, etc. Other deployments of public safety resources shall include but are not limited to a complete and thorough inspection of all event venues at a mutually agreeable time; explosive detection canine sweeps of any vehicles entering the secure perimeter during lockdown; uniformed armed police officers posted at all points of entry while being utilized for ingress/egress; tactical police assets as appropriate; crowd control; intelligence capabilities; motorcade/vehicle escorts; counter surveillance, investigative, mounted, motorcycle, aviation, and bicycle patrols as appropriate; airspace security resources (including counter-UAS assets, if available); local fire services; water rescue; urban search and rescue; hazmat mitigation; and mutual aid agreements resulting in support from outside police and fire services as necessary.
- The host city, county, and/or state must agree to work closely with the NFL and LOC to ensure necessary street closures are made when and where needs are identified for both partial and full closures, at no cost to the NFL or LOC. Both parties recognize that public safety remains a priority and allowing access to both private and public areas is taken into consideration when closures are requested. The host city, county, and/or state must also provide, at no cost to the NFL and LOC, any necessary equipment or material required by the NFL and LOC to prevent vehicle incursion.
- The lead law enforcement agency working with the NFL and the LOC will provide all current emergency evacuation and preparedness plans specific to the event venues being used. The NFL and LOC will work with the city and county on developing emergency preparedness plans specific to the event.
- The primary public safety agencies should designate a representative to be present in NFL Control during event hours to serve as a liaison to the event.
- The lead law enforcement agency must identify a central location to serve as the command post for public safety, transportation and logistics. This center will be staffed by decision makers from the participating public safety entities, transportation coordinators, traffic planning agency, city, county, and other municipalities, as needed. All communication will be directed through the center and it will serve as the central point of information for Draft week. This command post would preferably be equipped with camera views and communication designed to monitor traffic.

**ACKNOWLEDGED AND AGREED:**

By: _____

Name: Eric Genrich

Title: Mayor

Report to the
# Parks Committee of the City of Green Bay

| MEETING DATE | PREPARED BY |
| --- | --- |
| March 21, 2023 | |

## AGENDA ITEM # Q.1

To approve funding $32,500 to go towards 1/3 of the total cost of a new Sam and Sadie otter memorial/sculpture/exhibit at the Wildlife Sanctuary, with the Friends of the Wildlife Sanctuary funding the remaining 2/3 of the total cost.

## BACKGROUND

## RECOMMENDATION

## FISCAL IMPACT

## ATTACHMENTS

1. WLS Sam and Sadie (1)

Green Bay
Wildlife Sanctuary

# *Sam and Sadie Memorial Installation*

Hutchison Art & Design

Hutchison Art & Design
Kent Hutchison
HutchisonArtDesign@gmail.com
920-791-1237

*Fully Insured*
*15 years of experience*
*Wide range of fabricating applications*

HutchisonArtDesign.com

# Project Narrative

Atmosphere of installation

- Installation Intention:
    - Installation will act first and foremost as a memorial for long term Wildlife Sanctuary residents Sadie and Sam.
    - Installation will inspire curiosity, wonderment and appreciation for otters and their habitat
    - Sculpture will be exterior constructed of long lasting and weatherproof materials that require a little to no maintenance
    - Installation will be interactive, immersive, and will allow viewers to walk through to discover nuanced details
    - Installation will be educational and biologically accurate
- Installation components:
    - Life sized cast bronze sculptures of Sadie and Sammy
    - Various regional underwater vegetation sculpted in various metals including and not limited to steel, stainless steel, bronze, brass, aluminum and copper
        - Aquatic plants may include: Water lily, curly leaf pondweed and water celery
    - Hand welded tree stump with elaborate root system
    - Underwater scene that has a stone riverbed made for walking
    - Various underwater creatures created out of various metals
        - Creatures include: fish, crayfish, river clams

# Included in the Habitat Installation

## Water Lily

## Curly Pondweed

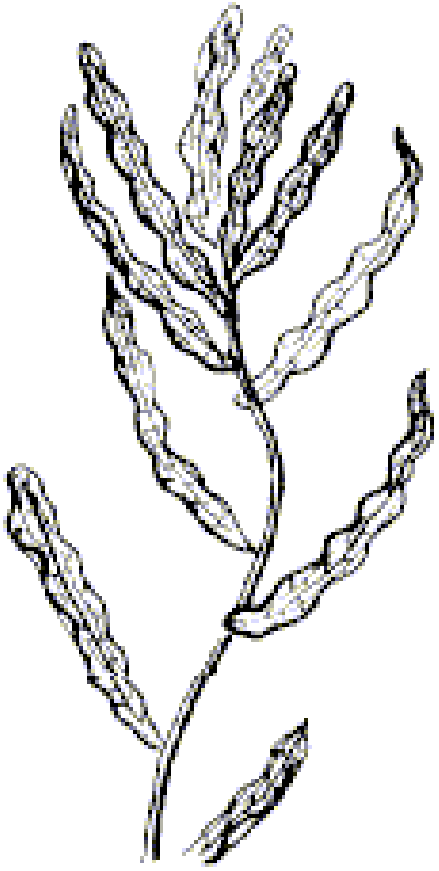

## Water Celery

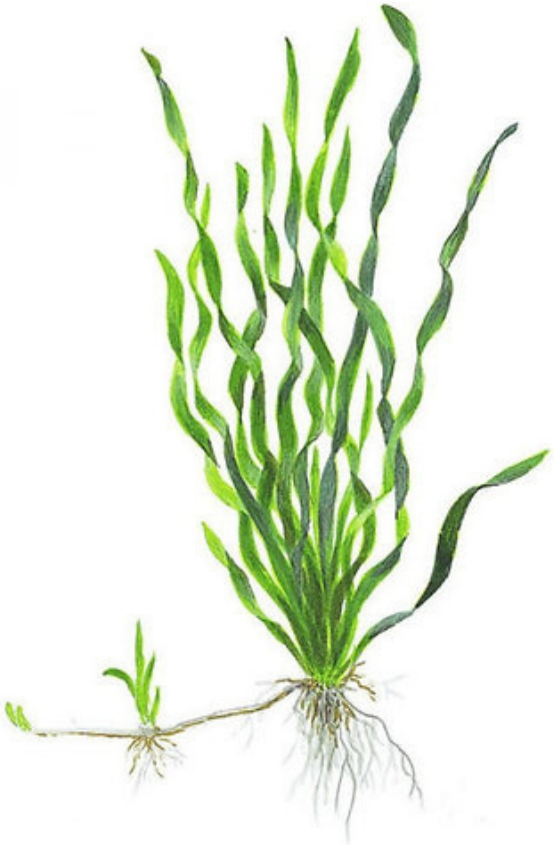

# Included in the Habitat Installation

Crayfish

Trout

Green Frog

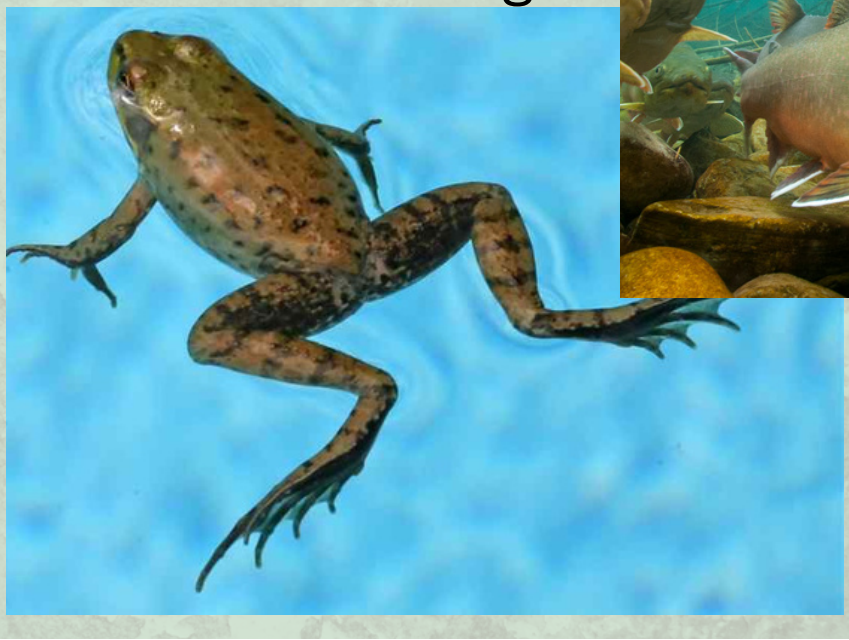

# Renderings

"Sam and Sadie Memoial Installation"
2023

Shelf Mushroom
Water Lily
Sam and Sadie
Water celery
Cedar Stump
Green Frog
Curly Pondweed
Crayfish
Handmade boulders
Creek Bed
"Sam and Sadie Memoial Installation"
2023

# Budget

- Budget
  - These budget options include all components of design, fabrication and installation of the S&S Memorial Installation.
    - Design, engineering specs, administrative duties
    - Fabrication, casting process, boulderscaping/habitat construction
    - Transportation/lodging - foundry
    - Foundation prep and pour
    - Materials
    - Installation

| | |
|---|---|
| • Option 1<br>○ Custom stone river bed<br>○ Cast bronze Sadie and Sam sculptures<br>○ Metal creatures: Crayfish<br>○ Metal aquatic plants: Water lily<br><br>**Options 1 Complete budget estimate:** $62,500 | • Option 2<br>○ Custom stone river bed<br>○ Cast bronze Sadie and Sam sculptures<br>○ Metal creatures: Crayfish, river clams, rainbow trout, sunfish<br>○ Metal aquatic plants: Water lily, curly leaf pondweed and water celery<br>○ Metal Eastern Cedar tree stump with elaborate root system and mushrooms throughout.<br>○ Metal Birch beaver stump<br>**Option 2 Complete budget estimate**: $97,500 |

# Next steps

**Next steps are to select an option and put a ⅓ budget payment down. Another ⅓ will be paid upon request mid way. The final ⅓ will be paid upon project completion.**
**HAD estimates installation during the late fall months. Upon option selection we will secure a place in line to receive service at a bronze sculpture foundry over the summer months. This is important as foundries are often backed up several months.**

**Option:**_____

**WLS Sign:**_____

**Date:**_____

**HAD Sign:**_____

**Date:**_____

# Past work

MORE AT: HUTCHISONARTDESIGN.COM

Report to the
# Parks Committee of the City of Green Bay

| MEETING DATE | PREPARED BY |
| --- | --- |
| March 21, 2023 | |

## AGENDA ITEM # Q.2

To approve the donation of a turtle sculpture from the Baird Creek Preservation Foundation with the condition that staff will work with the artist and the Baird Creek Preservation Foundation to select the best location within the Baird Creek Greenway.

## BACKGROUND

## RECOMMENDATION

## FISCAL IMPACT

## ATTACHMENTS

1. Turtle Sculpture Image 1
2. Turtle Sculpture Image 2

Green Corn
Yutlehwayahe'
Green Bean
Yeyathokwas
Strawberry
Onastase'
Ahontsa
Ohyatsheli
6
7
8
9
10
11
12
18
19
20
21
22
23
24

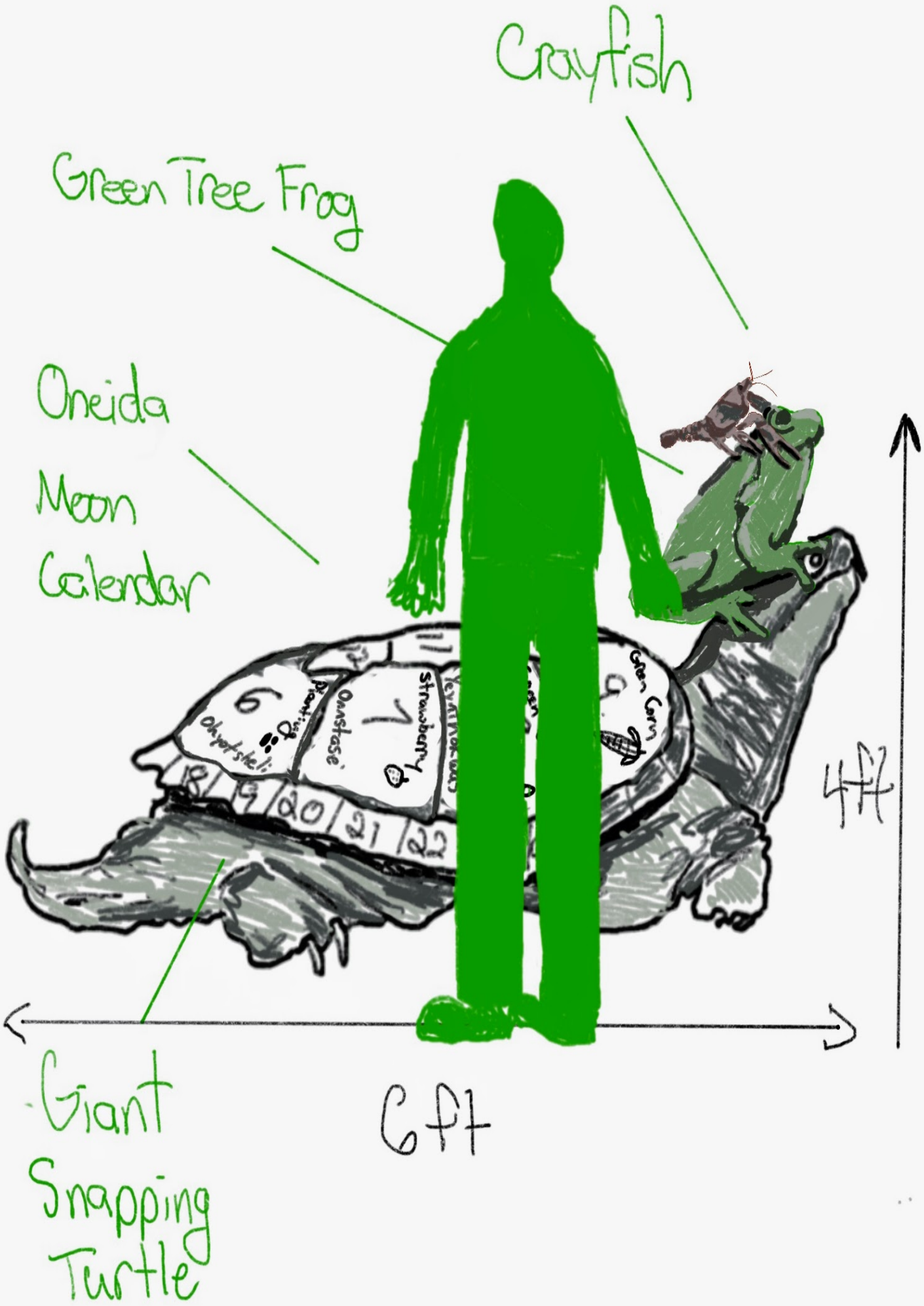
Crayfish
Green Tree Frog
Oneida
Moon
Calendar
Giant
Snapping
Turtle
4ft
6ft

Report to the
# Personnel Committee of the City of Green Bay

| MEETING DATE | PREPARED BY |
| --- | --- |
| March 21, 2023 | |

## AGENDA ITEM # R.1

To approve the request to fill the following replacement position and all subsequent vacancies resulting from internal transfers.

a. GIS Analyst

## BACKGROUND

## RECOMMENDATION

## FISCAL IMPACT

## ATTACHMENTS

1. Personnel Committee Request to Fill Memo - 3.14.2023
2. GIS Analyst - Wayne_03-14-23

# MEMORANDUM

Human Resources Department

To: Personnel Committee

From: Emma Baierl
Human Resources Generalist

Re: Request to Fill Vacant Positions

Date: March 14, 2023

The Human Resources Department is requesting authorization to fill the following replacement positions approved as part of the 2023 budget and all subsequent vacancies resulting from internal transfers. The justification reports are attached.

- GIS Analyst – Replacement position due to the resignation of Krystina Wayne effective at the end of the day on March 1, 2023. This position is budgeted at $57,657 – 67,828 annually (Pay Grade I).

**Position Fill Request**
**Justification Report**
**March 14, 2023**

**Position Title: GIS Analyst**

1. **If this position is a replacement position, please indicate the reasons for the vacancy. If this is not a replacement position, please indicate the reasons for requesting the position.**

   **_X_____ Replacement Position _____ Not a Replacement Position**

   The GIS Analyst position is vacant due to the resignation of Krystina Wayne, effective March 1, 2023,

2. **Is this position included in the current budget? If not, please list how this position will be funded (grant, internship, etc.). Please list the salary range of the position.**
   This position is funded in the 2023 budget. The salary range for the position is currently $57,657 – 67,828, annually.

,

3. **Please list the functions and any special information regarding this position.**
   The GIS Analyst position is primarily tasked with maintenance and record-documentation of public infrastructure databases within the City's Geographic Information System (GIS). In addition to these tasks, the GIS Analyst is responsible for developing and deploying new GIS-based applications to be used by City departments to streamline workflow, provide more complete and reliable records, and upgrade the technology from paper-based record keeping. The GIS Analyst also is responsible for converting legacy data into our GIS system.

4. **Does the position generate revenue or reduce expenses? If so, provide an estimated amount.**
   The GIS Analyst does not directly generate revenue, but does reduce expenses when compared to the alternative of contracting the service out. If the City needed to contract the workload out to a contracted employee, it is estimated that the costs would be range of $75,000 to $85,000 annually.

5. **Please explain why current staff is unable to absorb duties of this position.**
   With ever-increasing GIS-based workflow within the City, the amount of hours of available work would be greater than the number of hours available for the remaining GIS Analyst. Also, since the retirement of the IT Director, the remaining GIS Analyst has taken on additional job responsibilities, further reducing his availability to absorb work tasks assigned to this position.

6. **If duties of position are presently being done, how are they done?**
   The duties of the position were being completed by the incumbent in the position, until the date of her resignation. Work tasks assigned to this position are currently not being completed.

7. **What service would be reduced or eliminated if this position is not filled?**

GIS database maintenance would be severely reduced if the position is not filled. Also, all legacy data conversion would stop, resulting in a severe detriment to the Department of Public Works.

8. **What are the alternative methods and costs of accomplishing the work?**
   The only reasonable alternative to filling the position would be to contract the work out to a consultant. This is expected to be cost-prohibitive.

9. **Are there union issues?**
   There are no union issues regarding this request.

10. **Other supporting comments.**

Report to the
# Personnel Committee of the City of Green Bay

| MEETING DATE | PREPARED BY |
| --- | --- |
| March 21, 2023 | |

## AGENDA ITEM # R.2

To refer to staff to prepare a proposal to the committee which includes solutions and costs to secure City Hall; a report that details the police calls to City Hall and a draft of an employee survey to gauge employee opinions on City Hall security.

## BACKGROUND

## RECOMMENDATION

## FISCAL IMPACT

## ATTACHMENTS

None

# MEMORANDUM

Human Resources Department

To: Common Council

From: Joseph Faulds, Chief of Operations
Chris Davis, Police Chief

Re: 2023 Police Contract Update

Date: March 21, 2023

**Tentative Agreement between the City and the Green Bay Professional Police Association**

A tentative agreement has been reached by City and the Green Bay Professional Police Association ("GBPPA"). The following terms are recommended to be approved by the Common Council:

**SCHEDULE A**
**WAGE SCHEDULE**

| Contract Year | Amount | Effective |
|---|---|---|
| 2023 | 3.25% ATB | 01/01/23 |
| 2023 | 0.25% ATB | 12/03/23 |
| 2024 | 3.00% ATB | 01/01/24 |
| 2024 | 0.50% ATB | 12/31/24 |

In addition, there are two changes to Schedule A:

1. Advanced Patrol Officer used to have an increase at year 6 and year 7. This has been collapsed to have one increase starting at year 6.
2. All detectives will receive an $80 stipend. $80 stipend used to only be paid to detectives in the Specialist I and Specialist II classifications.

## Financial Impact

For 2023 the City budgeted a 3% COLA starting 1/01/23 plus a $56,000 lump sum to absorb the proposed wage increase.

## Tentative Agreements (Language Modifications)

Here is a list and summary of Tentative Agreements that will be incorporated into the Agreement:

**Article 5. Shift Assignments**

5.5 - Temporary Assignments in the best interest of the employee.

- The Police Chief, with association approval, can temporarily assign employees to a project or assignment for up to 15 consecutive working days to assist with the member's overall wellness.

5.6 – Special Projects. Updated to reflect who is and is not eligible.

5.8 – Safety Staffing.

- City may count up to two (2) Patrol Sergeants for purposes of safety staffing. A minimum of 2 (two) patrol sergeants will be working at all times. Command Officers will not be included in the safety staffing.

**Article 6. Overtime**

6.3.2 Qualification of Overtime.

- Sergeants in one division are ineligible for non-special event OT in another division. Detective Sergeants are not eligible to work any Detective OT involving non-supervisory duties unless there are not detectives available for the work.

6.3.7 Shift OT Postings.

- PD now can post for "Anticipatory OT" for safety staffing shortages to assist with call-in for OT. Officers can sign up for OT and will be the first called but can still refuse to take the OT if something comes up. PD management will staff based on the call-in procedures if the anticipatory list does not fill all of the positions. Officers will be assigned to Packers games using the Inverse Non-Road OT procedure in Appendix A.

**Article 7. Selection for Specialty Teams and Assignments**

7.2 and 7.3 Defines what is an assignment which is the officer's regular shift duties and those that are detached assignments that are supplementary to an officer's regular assignment.

<u>Selection Process</u> – Interview process with an interview team including HR, PD Management, and with at least one GBPPA member and one member from an outside agency or community member. Peer Review has been changed to include 10 members of the same rank selected at random with a GBPPA member to observe the reviewer selection process.

<u>Physical Agility Testing</u> – the Canine Unit, SWAT Team, Dive Team, and Marine unit will need to pass a physical agility test reasonably designed to measure the ability of the officer to perform the role on a pass/fail basis. This will be completed before an officer goes through the selection process outlined above.

<u>School Resource Officer</u> – Must have 3 years of experience.

<u>SWAT Team</u>

- SWAT Team will train up to 17 hours per month to ensure compliance with the ALERT status and training standards for SWAT teams.
- Allowed to conduct one 40-hour in-service training per year in addition to monthly training where SWAT members will adjust schedule to attend the training.

7.9.7 – In the event the department implements mandatory CCIT training for all sworn officers, then CCIT Team will be removed and a CCIT Coordinator position will be established in the Behavioral Health Unit.

Peer Officer Support Team –

- Formerly known as the Critical Incident Stress Management Team. Management will make reasonable efforts to have POST officers on each shift.

Training Unit –

- Range Master was taken out of the Training Unit and is posted in its own article. The rangemaster is considered a regular position in the proposed contract and not a duty within the training unit.
- Though the rangemaster is a department trainer, the position was separated to be consistent with other regular positions (traffic officers, behavioral health officers, community police officers etc). Also, it was separated to define qualifications, selection process, core hours, flex time and certifications/training.

Animal Control Officer –

- Specific language for the selection and work hours was added for this position, as well as a statement that the Animal Control Officer is not counted toward patrol safety staffing levels.

Gang Identification Task Force has been removed.

Traffic Officers – Excess hours.

- Other regular positions such as community police officers and behavioral health officers have the ability to earn time for time to give them flexibility to complete their duties and responsibilities.
- This is managed by supervisors to give traffic officers the opportunity to develop traffic enforcement strategies to focus on deterrence, prevention, and solutions to traffic problems that they may not have time to complete within an 8 hour a day.
- The general rule is that employees may accumulate/use/ buildup 25 hours or less.

Flex Schedules - All specialty teams will flex schedules in accordance with Appendix D that was approved in the previous agreement.

**Article 11 – Additional Pay**

- All detectives will receive a premium pay of $80, rather than only Specialist I and II job classifications as specified in the previous agreement.
- There will be a language premium pay of $500 for officers with sufficient skill in communicating one or more languages other than English.
- No changes to the Physical Fitness Test, but this language is incorporated into this article.

**Article 12 – Clothing Allowance**

The Police Department will pay for and provide uniforms and equipment for new hires instead of providing a stipend to new hires. After the initial equipment issuance, members will be provided with an annual uniform allowance to cover the cost of maintaining uniforms and replacing worn-out equipment.

**Article 17 – Health and Dental Insurance**
Police officers are able to participate in the City's wellness program: Health 1265.

**Article 23 – Personal Days**
Police officers will be allowed 4 personal days.

**Article 30 – Advancement and Promotions**

- The process for promotion to Sergeant has been revised. The eligibility is either six years as a Green Bay Police Officer or 4 years as a Green Bay Police Officer and 2 years' experience as a full-sworn officer in a comparable agency.
- The City will use an assessment center and consultant group to help formulate the evaluation process for Sergeants. The Association will be able to provide input on the members of the evaluation panel and performance dimensions to be measured.
- Peer Review consistent with specialty teams and assignments except it will be sent to 12 individuals.

The Sergeants Duties and Assignments are included in this article.

Promotion to Detective –

- Historically the Detective position was a specialty assignment, and selections were made using a contract-specified process. Now it has been agreed to have the position be a promoted position.
- This means the position is now under the jurisdiction of the Police and Fire Commission. Officers will go through a promotional process similar to that used for Sergeants to obtain the rank of Detective.
- Appointment to, suspension, and removal from the rank of Detective will now fall under the jurisdiction of the PFC.

**Article 34 – Residency**

- Changed to 35 miles radius and clarify the strike through portion. We increased the mileage as we thought it was reasonable for an employee to respond to work within an hour of being called.
- However, the contract states only 30 mins of travel time will be compensated so increasing the mileage did not have a bearing on compensation.
- The radius was increased to 35 from 20 as the officers on K9 and SWAT could still respond within a hour of being notified based on the 35-mile radius.
- The strike through language was removed as detectives are defined in article 30 and the department never maintained a separate call-in list for employees that resided outside the 20-mile radius.

**Article 39 – Unit Duties**
Supervisory personnel outside of the bargaining unit may perform uniformed patrol duties, but non-bargaining employees cannot be assigned to do Association work to avoid payment of OT or meet minimum staffing levels.

Supervisory employees can be assigned to perform patrol duties for up to 24 hours annually to maintain familiarity with such duties to aid in evaluating officer's work. In emergent situations,

supervisory employees can perform patrol duties (such as encountering a community member needing police assistance in the course of one's regular duties).

The CSO duties are also clarified in this article.

## Next Steps

The recommendation is to approve the temporary agreement as proposed. Once the City and GBPPA approve of the temporary agreement, then the City and GBPPA will sign and fully execute the agreement.

## ARTICLE 5 SHIFT ASSIGNMENTS

5.1 ASSIGNMENTS IN GENERAL. Assignments to shift positions shall be by seniority among those persons possessing the qualifications for the position to be filled. Assignments shall be made and persons with appropriate qualifications and seniority may bid for shift positions only when a vacancy exists in such position.

5.2 SHIFT TRADING. Officers shall be allowed, upon request, to have another officer substitute for the requesting officer on any given tour of duty under the following conditions:

~~5.2.1~~ The substitute ~~officer~~ member shall be of the same rank and be assigned to the same division as the requesting member. ~~have the same general job description as the requesting officer (i.e., patrol officer and patrol officer; detective and detective, etc.).~~

5.2.2 The request shall be in writing and approved by the shift commander or Command Officer of both the requester and substitute, which said approval shall not be unreasonably withheld.

5.2.3 The consideration to the substituting officer, such as the requesting officer substituting for the substituting officer in the future, shall be strictly between said officers, without the City having any obligation whatsoever to be involved in enforcing any such agreement.

5.2.4 No trade may be made if the trade, when made, would result in an officer working more than 14¼-hours, in a combination of shift trade, training, duty hours and/or overtime, in any 24-hour period.

5.2.5 An officer who makes a partial trade with an officer on a contiguous shift with a 30- minute overlap shall remain on duty an additional 15-minutes at the end of that shift without any additional compensation.

5.3 TRAINING OF NEW PERSONNEL. The training of new officers shall be conducted pursuant to the departmental field training program under the provisions of this Agreement, excepting that while in training, the department shall have the right to assign shifts, groups, jobs, and duties as is necessary or proper under the training program, and all selection rights in regard to the same contained in this Agreement shall not apply to such officers; provided that in all instances the provisions regarding the length of the work day, the work week, provisions regarding pay, including overtime (except such officers may not bid, or be inversed, for normal overtime) shall apply.

5.4 TEMPORARY ASSIGNMENTS. The Chief of Police may, upon written notice to the Bargaining Unit, temporarily assign officers to special duties or projects for a period of up to 30-days; provided however that no officer may be temporarily assigned to any duties or projects which have historically been or normally are performed by or assigned to Bargaining Unit members as part of their job duties. If the assignment is voluntary, no premium pay shall be earned by the officer. An

officer's performance of any temporary assignment shall not impact on promotion (excepting that such might increase the officer's personal knowledge or experience) and shall not become part of the officer's personnel file or work record for promotional purposes.

5.5 TEMPORARY ASSIGNMENTS IN THE BEST INTEREST OF THE EMPLOYEE. The Chief of Police may, with Association approval, temporarily assign members to other duties or projects for a period of up to 15 consecutive working days so as to assist the member's overall wellness. Any member so assigned shall not be allowed to work overtime outside of his/her temporarily assigned duties. This provision may not be used as discipline, nor may such temporary assignment be considered in future discipline.

5.6 DAYLIGHT SAVINGS. When clocks are adjusted for "Daylight Savings Time" employees shall be compensated according to the clock rather than actual hours worked. Overtime shall commence after 8½ hours on a regular work day.

5.7 SPECIAL PROJECTS. The Chief of Police may authorize special projects not to exceed 60-days. The special projects shall be assigned based on qualifications amongst those interested. The selection process will be in accordance with Section 7.4, with the exception of the Peer Review process which shall not be included. ~~7.2.3.i.(A)~~. The length of the special project may be extended upon mutual agreement with the Association for a period of up to 30-additional days. Approval for such extension shall not be unreasonably withheld. Members in the following positions shall not be eligible for special assignments:

| | | |
|---|---|---|
| ~~Forensics~~ | Canine | Neighborhood Response Team |
| Detective | Traffic Enforcement Officer | School Resource Officer |
| Drug Unit | Range Master | Community Policing Officer |
| ~~Crime Prevention~~ | Animal Control Officer | Behavioral Health Officer |

Identical special projects shall not be posted more than two consecutive times except for good cause shown or by mutual agreement. Special projects may not be used to avoid filling vacancies in specialty units. Sergeants may only be assigned to special projects to perform supervisory duties.

5.8 SAFETY STAFFING.

5.8.1 Policy. Both the City and the Bargaining Unit keep officer safety as a foremost priority in all aspects of working conditions. It is recognized that the primary safeguard for officers is the police force itself, with each officer receiving protection through teamwork with, backup for or by, and general interdependency with other officers.

5.8.2 Staffing Requirements. In order to serve the above general policy, the following minimum officer safety staffing shall be maintained at all times, subject only to the provisions of 5.7.2.c below. The City may count up to two (2) Patrol Sergeant positions ~~may count~~ as patrol officers for purposes of safety staffing:

a. Safety staffing between the hours of 6:15a and 10:30a will be 11-patrol officers, between the hours of 10:30a and 7:00p will be 13-patrol officers.,From 7:00p until 3:30a this minimum shall increase to 16-patrol officers, however may be reduced to 14-patrol officers because of absences due to officers going home during shift due to illness. From 3:30a until 6:30a minimum staffing may be reduced to 10-patrol officers on duty.

b. The following provisions shall apply to the counting of patrol officers for minimum staffing requirements:

   i. Command Officers will only supplement safety staffing and do not count toward the safety staffing requirement.

   ii. There will be a minimum of two patrol sergeants working at all times.

   iii. Officers in plain clothes shall count toward the required number for staffing if officer is on patrol;

   iv. Two officers assigned to a patrol squad car shall count as two officers for required number for staffing;

   v. Probationary officers in training shall not count toward the required number for staffing;

   vi. School Resources Officers (SROs) shall not count toward the required number for staffing;

   vii. Community Police Officers (CPOs) shall not count toward the required number for staffing;

c. Unexpected deviations below safety staffing on any given shift within 3-hours of the end of that shift shall be filled by a call-in of the oncoming shift. This may occur when an officer or sergeant goes home sick. Should the time slot extend outside of 3-hours a full call- in must be done even ~~though you are currently~~ if the department is running below staffing.

d. "Active patrol duty" shall mean a uniformed or plain clothed trained officer being assigned to perform a shift tour of duty the usual and customary duties of active police patrol within a district or other area of the city designated by the Chief of Police or designee.

e. Shift Commander Discretion. Due to the exigency and emergency nature of police work, deviation from staffing and assignment requirements within the work day are inevitable, and shift commanders shall have the discretion to direct the work force to meet unexpected situations, events or occurrences arising from time to time; provided that deviations shall not be allowed for expected situations or events, or those which reoccur on a regular basis so that they may be planned for.

f. In the event of a violation of the provisions of this Section, whether by the City failing to call in an officer or calling in the wrong officer, the officer who should have been called in shall be compensated for the wages the officer would have earned had the officer been called in.

5.9 GROUP SELECTION. Assignments to groups shall be selected by departmental seniority as follows.

5.9.1 Current group assignments shall be continued, and no bumping shall be allowed.

5.9.2 When a vacancy in any group occurs on a shift, such shall be posted for selection by all officers qualifying to fill such a position, including officers already assigned to the shift.

5.9.3 Officers being newly assigned to a shift shall be assigned to a group having a vacancy after the posting under 5.8.2.

5.9.4 When an officer leaves a shift because of a move that entitles the officer to return to the shift at a later date, that officer shall be treated as a newly assigned officer to the shift under 5.8.3, unless agreed otherwise by the City and the Bargaining Unit before the officer leaves the shift.

5.9.5 New Shift/Group changes: An officer that moves shifts or work groups and is owed off time due to the shift/group move shall take any time off owed within the FLSA period. The officer shall be allowed to elect the off day(s) within the FLSA period (under the procedure identified in Article 14.3(c) of the Agreement), as long as the vacation book shows such day(s) as available. In the event the officer does not elect to do so, or his/her chosen off day is not available in the vacation book, the Department shall assign the day(s) off owed. No payback or compensatory time will be given unless the City is unable to schedule the off time owed within the FLSA period.

The formula for determining the off time owed to an officer for a shift/group move is as follows:

1. Prior to the shift/group move, use the officer's last full rotation 5 days on 3 days off. After the shift/group move again use one full rotation 5 days on 3 days off. Total the number of work days and the number of off days.
2. Total number of days worked in point #1 multiplied by .6 to determine the number of days off the officer should have had.
3. Compare the number of days off in point in point #1 to the number of days off in point #2. If point #2 is higher than point #1 this is the amount of time owed to the officer. If the officer is owed any time off, the office shall be scheduled the time off within the FLSA period.

The City will not seek compensation from the officer or add additional work

days to the officer's schedule if, as a result of a shift/group move, the officer is off work more time than allotted during a normal rotation.

An officer that is scheduled off due to time owed from a shift/group move is unable to substitute any off time (i.e. personal or sick) for those scheduled off days.

5.10 ASSIGNMENT OF POSITIONS. Assignments to job or duty positions shall be made only when a vacancy exists, and there shall be no bumping

## ARTICLE 6
## OVERTIME

6.1 OVERTIME PAYABLE. Employees shall be compensated at the rate of 1½-times based upon their normal rate of pay for all hours worked in excess of the scheduled work day or work week. Overtime shall commence after 8½-hours on a regular workday or for hours worked outside the normally scheduled workweek. For purposes of calculating overtime, compensation for the hourly rate shall be based on a bi-weekly schedule of 75.6-hours and an annual schedule of 1964.5-hours. No change in the amount of overtime claimed by an employee shall be made unless the employee is notified of such proposed change within 7-days of the employee submitting the overtime.

6.2 OVERTIME/COMPENSATORY TIME. Compensatory time shall be limited to an accumulation of 100-hours.

6.3 ALLOCATION OF OVERTIME.

6.3.1 Posting. All overtime of the department schedule, where practicable, shall be posted. If more persons qualified for such overtime work sign for such than are needed, overtime shall be assigned on a seniority basis among those qualified for the work. (It is contemplated that at times it shall be necessary to determine the qualification of an employee to work overtime based upon the employee's knowledge of the subject of the overtime work or the training and expertise of the employee. However, in the event of a dispute as to the same, the City shall have the burden of establishing the necessity.) In assigning overtime the department shall ask for volunteers on the basis of seniority regardless of whether the officer is on a work or off day. In the event sufficient volunteers are not found, the balance of the overtime shall be assigned on the basis of inverse seniority among those on their workdays and then by inverse seniority among those on off days. Management may refuse overtime where there is a legitimate safety concern. Practicability of posting shall be determined in light of time available for posting and departmental or public security, or other relevant and sufficient factors. This paragraph shall not apply to overtime resulting from an extension of a person's normal workday duty, nor shall it apply to overtime not assigned by the City of Green Bay.

Special event overtime will be posted for a minimum of 30-days in advance of the event, unless the Department is not provided 30-days advance notice of the special event. The most senior qualified officer signing for and assigned the special event overtime will be expected to perform that overtime assignment unless the officer cancels 10-days prior to the special event. In the event the Department has less than 30-days advance notice to post the special event the posting will include a date to cancel. For purposes of these posting procedures a special event will typically be considered crowd control, traffic control, and general security at events, such as an athletic event, concert, ceremony, demonstration, exhibition, march, pageant, parade, procession, race, show, or other similar display which interferes with normal flow or regulation of traffic on the streets, sidewalks, or right-of-way, or the normal use of parks or other public or private grounds.

6.3.2 Qualification for Overtime. When determining qualifications, department shall abide by

the following:

a. When the overtime in question calls for the officer not to be in uniform, such overtime shall be performed by a detective. However, this provision shall not prevent the department from using patrol officers for ordinary plain clothes surveillance duty during their normal shift or using a patrol officer when the department is unable to secure sufficient detectives whether they are on or off duty. Use of patrol officers shall not reduce any shift below the number required for safety reasons. If the detective maintains a uniform, the detective shall be allowed to select overtime with the patrol division and specialists for crowd control events such as the 4th of July, Artstreet, and the like.

b. When the overtime in question calls for the officer to be in uniform, such overtime shall be performed by an officer within the patrol division who, in the normal course, performs their duties in uniform and is limited to the patrol division. This involves duties including and similar to road patrol, such as Speedwave, OWI saturation patrols, downtown security, and any other assignment where it is anticipated that the patrol vehicle shall be used the same as a road patrol vehicle, requiring knowledge and proficient use of the patrol vehicle and all equipment contained therein. Such overtime shall be filled via the road overtime call-in list and limited to officers in the patrol division.

c. Specialists shall be allocated overtime within their respective specialties, and in addition, if the specialist is, in the normal course, required to maintain a uniform, such specialist shall be allowed to select overtime with patrol division officers for crowd control events, such as 4th of July, Artstreet, and the like. Where it is anticipated such use of the patrol vehicle would not be needed, shall be filled by seniority from the full specialty call in list (mix of detectives, specialist positions and patrol officers). Examples of such overtime would be crowd control, traffic control and general security where the presence of a patrol vehicle is operationally desired, but full functional operation is not required.

d. Any overtime assignment where it is unclear what pool of officers should be utilized; such determination shall be made via mutual agreement between the City and an Association representative.

e. All overtime above shall begin at the station and the officers assigned shall report to the Shift Commander or briefing supervisor verifying their presence, at the end of the assignment the officer(s) must stop at the Shift Commander's office and verify they have completed their assignment. There is no change to the Packer Game Day reporting for duty and overtime procedures.

f. Absent a bona fide emergency, a sergeant in one Division shall not be

eligible for non-special event overtime work in another Division.

g. Sergeants in the Investigations Division shall not be eligible to work any Detective overtime involving nonsupervisory duties unless there are no Detectives available to perform the work.

h. Command Officers shall not be qualified to work any overtime involving nonsupervisory duties.

6.3.3 Overtime as Duty Assignment. An overtime assignment may be cancelled by the City at any time, provided that if it is cancelled within 24-hours of the scheduled start of the assignment, the officer shall be paid minimum call-in under sec. 6.4 below, or in the case of shift overtime, payment for the entire shift. The term "cancel" shall include cutting

short overtime which was planned to run for more than 3-hours.

6.3.4 Special Event Overtime. For special events (such as the 4th of July, and the like), because the City is at the mercy of the weather and the needs of the event sponsor, overtime may be cancelled or altered at any time prior to the scheduled commencement without relief; however, once the officer starts the assignment, if it was scheduled for more than three hours, there shall be a minimum three hours paid.

6.3.5 Overall hour limitation. Except as provided above, overtime shall not be allocated or assigned where it would result in an officer working more than 14¼-hours, in a combination of overtime, training, duty hours and/or shift trades in any 24-hour period. A new 24-hour period commences whenever there is a 7½-hour break in on duty time. An officer cannot be inversed into an assignment if it would result in the violation of this Article. The 14¼-hour limitation provided for in this paragraph shall be extended to allow for the duty of officers to extend their shifts upon the order of a Command Officer or when addressing emergencies that may occur at the end of a shift.

6.3.6 Inversed Overtime Assignment. Whenever an officer is inversed to work an overtime assignment, the officer inversed shall have the right to have another officer work the overtime on the same basis as the assigned officer, provided the replacement officer is from the pool of officers that were originally considered for the overtime assignment (in essence giving it away, the one that actually works it gets paid). In the event the City determines the need for the inversed overtime assignment has ended, the officer that is working the inversed overtime assignment may voluntarily cancel or cut short the overtime assignment with notice to the Command Officer. At the officer's choice inversed overtime assignments may be cancelled in accordance with provisions of this Article.

Improper Inverse. In the event an officer is improperly inversed under any of these procedures, the officer shall receive additional pay in the amount of straight time pay for each hour worked during the improper inverse assignment. In the event an officer is notified of a cancellation of the

improper inverse assignment within one hour of the notice of inverse assignment and the employee chooses to work the inverse assignment under section 6.3.6 the additional straight time pay shall not be applicable to such inversed overtime assignment. Examples of road overtime are attached as Appendix A.

6.3.7 Shift Overtime Postings and Subsequent Openings. The City shall post only for actual shift openings when posting for available shift overtime. Such postings shall be displayed for a minimum of 4-days. Any subsequent shift openings of the same overtime period(s) discovered while the positing is still active may be filled via this posting. Once such posting is taken down, any subsequent openings not involving a holdover must be filled via a telephone posting of all officers by seniority, even if the overtime period is the same as that of the previous posting.

a. Anticipatory Overtime: One exception to only posting for actual shift openings are for anticipated but not actual safety staffing shortages. The City may use "anticipatory postings" for anticipated safety staffing shortages. Such postings will be clearly marked anticipatory. This posting shall be filled or cancelled no later than 24 hours from the time of the assignment. Members who sign this posting may refuse to accept the assignment at the time the posting is taken down. If the anticipated posting does not have an adequate amount of members to fill the staffing shortage when taken down the shortage must be filled via a telephone posting of all officers by seniority.

6.4 MINIMUM CALL-IN TIME. Employees shall be compensated for a minimum of 3-hours for any call-in time worked on a scheduled work day, a day on which an officer works a full 8½-hour work day pursuant to posted shift overtime, or for a call-in while an officer is attending either a voluntary school, specialty team training or in-service training (an officer receiving call-in pay on a day attending school shall still be entitled to compensatory time as if no call-in occurred if the officer successfully completes the school in question, and if the school is not successfully completed, shall receive compensatory time for those hours in attendance). The department may engage police officers in police business on site during in-service training without paying call-in, provided such shall not jeopardize the officer receiving full credit for the class interrupted. Employees shall be compensated for a minimum of 6-hours for any call-in time on a day off or scheduled vacation. This call-in time shall be compensated at the base rate of pay.

6.4.1 Any officer who takes vacation or off-time coming, personal leave day or any other off- time authorized after being scheduled and notified of a required court appearance or other required non-shift departmental duties shall be compensated for a minimum of 3-hours.

6.4.2 Continuous Duty: In the event an officer is called in for more than one call

in any given day, including notice of court or any other notice of time outside the regular shift, that officer shall not receive two call ins, but shall be paid continuous pay at the overtime rate of time and one-half from the beginning of the first call in to the end of the second call in; excepting that if the call ins in question are for specialized units established and existing for the purpose of being called in for special problems or occurrences, such as SWAT, K-9, accident reconstruction, the continuous duty rule shall not apply to more than one call in of such nature, but rather each call in shall be a separate call in.

6.4.3 When a trade of shifts is made between officers as authorized in section 5.2 of this Agreement, and one of the officers is subject to a call as set forth in section 6.4 of this Agreement, the officer working the day shall be subject to the 3 hour call in compensation and the officer who is off because of the trade shall be subject to the 6- hour call in compensation. It is understood that the above shall not affect the application of 6.4.1 and 6.4.2 of this Agreement.

6.4.4 Officers inversed to work overtime to satisfy safety requirements shall be paid call-in time under this section. Officers who volunteer to work such overtime shall be paid at time and one-half for the overtime actually worked.

6.4.5 Officers shall be subject to the residency requirements as outlined in Article 35, Residency, of the Agreement, for immediate need safety staffing shortage call-ins and immediate need detective call-ins.

6.4.6 Response time compensation for call-ins shall apply as outlined in Article 35, Residency, of the Agreement.

6.5 IMMEDIATE NEED CALL-IN COMPENSATION. Immediate need call-in is defined as that need not previously known or posted, where the officer is needed immediately. (Example: Immediate road staffing shortage). This does not apply to court related hearings where the officer is being called in to testify such as municipal or circuit court appearances, probation/parole hearings or Chapter 51 hearings.

6.5.1 When an officer is called-in for immediate need overtime such overtime shall commence at the station upon duty-ready status of the officer. Such officers shall report to the on- duty Shift Commander duty ready, which shall be recorded as the official start time; additional 30-minutes of overtime shall be added to that start time regardless of when the officer arrives.

6.5.2 In the event the immediate need compensation requires the officer to respond directly to a scene, the start time shall be the time the officer arrives at the scene. Such officers shall report to the on-scene supervisor which shall be recorded as the official start time. An additional 30-minutes of overtime shall be added to that start time, regardless of when the officer

arrives.

6.5.3 If the overtime assigned is to fill immediate safety staffing needs the supervisor shall begin the call-in process immediately. There shall be no deliberate or unnecessary delay of filling such overtime. The officer accepting the overtime receives pay from the time of reporting duty ready to the Shift Commander plus 30-minutes. There is no compensation for the time between discovery of the shortage and the paid start time of the officer. The period of time the shift was short staffed up to the time of discovery is to be reported to the Operations Commander.

**EXAMPLE:** (Immediate action.) At 7:00p it is determined that an error was made in Telestaff, and shift is below safety staffing until 10:15p. Shift Commander immediately starts the call-in process. Officer A is called at 7:15p and accepts. Officer A arrives at 7:55p and reports to the Shift Commander duty-ready (in uniform and ready to walk out door). Officer A receives pay beginning at 7:25p (time of reporting + 30-minutes). No compensation for the time from 7:00p to 7:25p.

**EXAMPLE:** (Unnecessary delay.) At 7:00p it is determined that an error was made in Telestaff, and shift is below safety staffing until 10:15p. Shift Commander decides to wait to begin the call-in as there is no officer available to make the calls or s/he wishes to eat lunch first. An officer is available at 8:00p and call-in begins thereafter. This delay would be deemed unnecessary as the Shift Commander could have started the call-in him/herself. The time from 7:00p to 8:00p would be compensated under 5.7.2.f

**EXAMPLE:** (Shortage not discovered right away) At 10:00p it is discovered that there was a safety staffing shortage since 7:00p. The supervisor immediately begins a call-in process. Officer is called at 10:15p and accepts. Officer reports to Shift Commander at 11:00p duty ready (in uniform ready to begin). Officer receives pay beginning at 10:30p (time of reporting + 30-minutes). The time from 10:00p–10:30p is not compensated. The time from 7:00p to 10:00p shall be compensated via Article 5.7.2.f. In this situation, the supervisor notifies the Operations Commander of the details of the 7:00p–10:00p shortage. The Operations Commander shall facilitate the remedy with the GBPPA.

6.6 ORDERED IN VS. VOLUNTARY ACCEPTANCE. "Ordered In" is defined as a non-voluntary assignment. The officer is ordered to come in and has no choice. In this situation the officer is compensated from the time the officer was ordered in to report for duty. Minimum call-in time (3-hours/6-hours) applies to this situation.

6.7 COURT CANCELLATION PROCEDURE. The afternoon shift commander shall be notified of any court cancellations. It then becomes the responsibility of the officer to call the shift commander after 5:00p on the day prior to the scheduled court date as to whether or not the court appearance has been canceled.

6.7.1 The shift commander shall record all such calls by date and time in a log book; that is, if an officer appears at court and the case has been canceled, s/he shall receive the

minimum call-in pay only if s/he had called in after 5:00p the prior day and was not notified of the cancellation. If the officer had not called in the prior day, s/he shall not receive the pay.

6.7.2 On those occasions when court appearances are canceled after 5:00p, the shift commander shall attempt to contact the officer with the cancellation, if the officer had already called in. If the officer is contacted 12-hours before the scheduled court appearance, the officer shall not receive call-in pay.

6.7.3 Court shall include any time an officer is instructed by the Chief of Police or designee or subpoenaed to appear in any Court, legal proceedings (including depositions), or before any governmental body or other person, tribunal or agency authorized by law to issue subpoenas, which appearance is related to or arises out of the officer's scope of employment. (The City and Bargaining Unit have disagreed as to whether there was a past practice for compensating officers who are subpoenaed or instructed to appear at arbitrations or grievance proceedings dealing with the administration of this Agreement and the City had previously informed the Union of the discontinuance of this alleged past practice in a letter to the Union, dated August 27, 1986. The above language shall not apply to these situations.)

6.8 OVERTIME FOR GREEN BAY PACKER GAMES.

6.8.1 Two postings shall be placed on the bulletin board once each year by July 1. All officers interested in working Packer games or working any extra overtime beyond what would be normal for traffic or field assignments are requested to sign the respective postings. These postings shall contain the anticipated staffing needs for the games.

6.8.2 Officers who sign the above said posting shall be assigned to work each of the Packer games in the year in question on the basis of departmental seniority.

6.8.3 In the event there is an insufficient number of officers signing the posting to fill the remaining complement needed for the Packer games, officers shall be assigned ~~by inverse~~ in accordance with the Inverse Non-Road Overtime procedure in Appendix A. ~~seniority among those on their workdays and then by inverse seniority on off days.~~

6.8.4 In the event that any officer who has signed the above said posting to work the Packer games later decides not to work any given game, such officer shall have the right to remove their name from the posting for any game by giving at least 10 days advance notice of such removal before the game in question.

6.8.5 Officers working overtime for Packer games shall be compensated at twice their regular rate of pay for all hours worked.

6.8.6 Use of Day Shift for Staffing Holdover on Day of Packer Games. On Packer game days, a holdover of officers to complement staffing until Packer personnel return for road duty shall be filled by seniority from a combined pool of day shift officers working that day. Such overtime shall commence at the end of the officer's normal shift. If enough officers do not volunteer, openings shall be filled by inverse seniority from this same pool. Payment shall be at double time for time worked.

6.9 STAND-BY PAY. Officers asked to be available for immediate call to duty shall receive an hourly

rate of pay equal to 15% of the top patrol officers' hourly rate for every hour in which they are on stand-by. When actually called to duty, they shall be compensated according to Article 6 and/or Article 11 of this Agreement. If such standby duty is necessary in order to provide mutual assistance outside of the City limits, then the department shall select qualified officers for such duty by seniority from among those signing a posting.

6.10 ASSIGNMENTS OUT OF CITY. When an officer is assigned to perform duties out of the City which requires the officer to be out of the city overnight, in connection with their responsibilities as an officer for the Green Bay Police Department, the following shall apply. Compensation for training and/or schools shall be in accordance with Article 29.

6.10.1 The work assignment starts when the officer reports to the police department for duty assignment and ends when the officer returns to the police department. In the event an officer must travel on an off day, the City does not guarantee any number of hours. In the event an officer is required to work on a scheduled off day, the City retains the right to schedule travel time with sufficient time to reach the destination.

6.10.2 Transportation shall be provided as determined by the department.

6.10.3 If the officer is on a work day, the officer shall flex their normal work hours to accommodate travel time and work hours to the extent deemed appropriate by the department. The City may assign normal police duties on the day of travel, and require officers to work normal police duties until travel begins.

6.10.4 While on the out of city job assignment, an officer shall flex their normal work hours so as to accommodate the times that job duties are to be performed out of city (for example, if the officer works the night shift and the job assignment is to testify in court, the department shall have the option of directing the officer to start the work day at 6:00 a.m. the following day when the officer is to be in court).

6.10.5 An officer shall not be compensated in any fashion during the hours of

10:00p and 6:00a provided that the officer is not required to perform job duties during these hours. If an officer is required to perform job duties during these hours the officer shall be compensated only for the time spent performing those duties. All other hours during the out of city assignment shall be compensable as work hours, either as actual hours of work, or hours spent engaged to wait or waiting to be engaged for work.

6.10.6 Once notified of the court date, officers may not take off time on that date. See 6.4.1.

6.11 PAY BACK COMPENSATION. Until December 31, 2017 all accrued payback compensation shall be used by Employee prior to the last date of employment, or paid out at the time employee separates from employment. Effective January 1, 2018 payback time will not accrue in excess of 100-hours. Any hours in excess of the 100-hour maximum on January 1, 2018 will be paid out at employee's then current rate of pay. Payment will be made as soon as administratively practicable after January 1, 2018. Thereafter, earned hours in excess of the 100-hour maximum will be paid out as they are earned.

**ARTICLE 7**
**SELECTION FOR SPECIALTY TEAMS AND ASSIGNMENTS**

~~7.1 APPOINTMENT TO SCHOOL RESOURCE OFFICER. Qualifications for the School Resource Officer~~
~~Program shall be as follows:~~

~~a. Minimum of 3-years as a Green Bay police officer.~~
~~b. Able to make critical judgments within the scope of responsibility of the position;~~
~~c. Ability to adapt to change;~~
~~d. Maturity;~~
~~e. Emotionally healthy;~~
~~f. Self-control;~~
~~g. Understanding of own and others' feelings;~~
~~h. Ability to handle pressure without overreacting;~~
~~i. Interest in working within the school environment;~~
~~j. Respect for constitutional rights of others;~~
~~k. Ability to communicate effectively with individuals, groups, juveniles and adults;~~
~~l. Ability to prepare necessary reports and records (i.e. written communications);~~
~~m. Interest and involvement with juveniles and youths, and/or young adults;~~
~~n. Knowledge of laws pertaining to juveniles;~~
~~o. Knowledge of practices relating to building security.~~

~~7.1.2 FILLING VACANCIES AND TENURE AS SCHOOL RESOURCE OFFICER (SRO). Any vacancy for an SRO shall be posted in the department pursuant to the rules for such posting.~~

~~7.1.3 The Selection Committee shall be a 7-member committee made up as follows: 3 representatives from the Green Bay School System, 1 representative from the Green Bay Human Resources Department, and 3 representatives from the Green Bay Police Department, delegated by the Chief of Police.~~

~~7.1.4 An officer not selected as an SRO shall have the right to grieve the decision of the Selection Committee through the grievance procedure. Only reasons capable of objective proof shall be considered in the event that a determination of non-qualification is made and grieved. The SRO Interview process will consist of the following scoring:~~

~~a. Seniority – 25 possible points:~~
~~21 or more years = 25 points~~
~~16-20 years = 20 points~~
~~11-15 years = 15 points~~
~~6-10 years = 10 points~~

~~b. Interview – 30 possible points: 90-~~

~~100 points = 30 points~~
~~80-89 points = 25 points~~
~~70-79 points = 20 points~~
~~0-69 points = 0 points~~

~~c. Resume/Cover letter - 15 possible points~~

~~d. Scenarios - 30 possible points~~

~~Candidate's overall score from the interview, resume/cover letter and scenarios must be at 70% or higher to continue in the process. Upon successful completion with a score of 70% or higher, the candidate's seniority points will be added to their score for a final~~

~~score. Candidates will be ranked by their final overall score and the candidate with the most points will be offered the position.~~

~~7.1.5 Tenure of the assignment shall be based on the adequate performance of officer and ongoing evaluations by both police and school administrators. If, in the estimation of the school administrators, the officer is demonstrably unacceptable, a recommendation would be made to the Chief of Police that the services of the officer as a School Resource Officer in the school be terminated. Upon receipt of said recommendation, the Chief of Police shall notify the officer in question of the recommendation, which notification shall set forth in writing the reasons for the recommendation. In the event the officer does not accept the recommendation, s/he shall have the right to grieve such through the grievance procedure set forth in the labor agreement. Only reasons capable of objective proof shall be considered in the event such a recommendation is made and grieved. If the recommendation is sustained in the grievance, or alternatively, if the officer fails to grieve within the time limits of the grievance procedure, the officer shall be returned to regular duty in the Police Department pursuant to the provisions of 7.1.6 below. If the recommendation is not sustained in the grievance procedure, the officer shall remain as a School Resource Officer.~~

~~7.1.6 Should an officer choose to leave the program, they may do so by requesting the same. If the officer decides to return to regular duty during the first 30 days in the School Resource Officer program, they shall return to their previous assignment and shift. After one year, if the officer leaves the School Resource Officer program, they shall have to return to whatever opening exists in the Patrol Division until such time that openings arise on other shifts and the officer's department seniority allows movement to another shift.~~

~~7.1.7 School Resource Officers shall receive pay consistent with Schedule A of this Agreement.~~

~~7.1.8 The SRO shall work a 5/2 work schedule during the school year. Hours of work for this position shall be 7:00a-3:30p. Summer schedule is a 5-2/4-3~~

~~schedule. Each SRO shall accumulate 1-work day every other week while school is in session and bank that day for off-time during the summer months. Accumulated banked days cannot be carried over to the next school year.~~

7.2 Regular assignments are those specialty assignments that are the officer's regular shift duties, and include:

7.2.1 Community Police Unit
7.2.2 Canine Unit
7.2.3 School Resource Officer Unit
7.2.4 Neighborhood Response Team
7.2.5 Drug Task Force
7.2.6 Traffic Unit
7.2.7 Professional Standards Division
7.2.9 Full-time positions in the Training Division (i.e., Range Master)
7.2.10 Animal Control Officer
7.2.11 Behavioral Health Officer

7.3 Detached assignments are those assignments that are separate from and supplementary to a member's regular assignment and include:

7.3.1 Special Weapons and Tactics (SWAT) Team
7.3.2 Dive Team/Dive Team Support
7.3.3 Peer Officer Support Team (POST)
7.3.4 Crisis Negotiation Team
7.3.5 Detached instructor positions in the Training Unit
7.3.6 Field Training Officer (FTO) Program
7.3.7 Marine Unit
7.3.8 Honor Guard
7.3.9 Police Motorcycle Operator/Instructor
7.3.10 Traffic Crash Reconstruction Team

~~7.4 SELECTION PROCESS. The following process will be followed for filling positions on the following specialty teams listed in this article.~~ Selection Process for Specialty Units

7.2.1 POSTING. ~~All~~ Openings for specialty team ~~and detective~~ positions will be announced either through posting or electronic communication to all officers. The announcement will include a description of the assignment; the closing date if any to apply for the assignment; requirements to be eligible for assignment; expiration date of the list; and description of the selection process.

7.2.2 ~~OFFICER~~ MEMBER APPLICATION. The posting will indicate if the officer needs to provide written notice, prepare a letter of interest, provide a resume, or other means of applying for the assignment.

7.2.3 PROCESS FOR SELECTION. The selection process ~~may~~ shall consist of the following:

a. At the time of the closing date of the posting, the candidate must meet posted requirements to be considered further for the assignment or specialty position.

~~b. If a physical fitness test is required the officer must pass the physical fitness requirements. Physical fitness testing will be required for Canine Unit, Canine Decoy, SWAT Team, SWAT Decoy, Dive Team, Dive Team Support Officers, and Marine Unit.~~

~~c. If a written test is required the officer must pass the written test with a score of 70 or higher to continue in the process. The written test will have a value of 100 points and the officer's score will equate to the number of points received on the written test.~~

~~d.~~ Interview by a panel including at least one GBPPA member designated by the Association and one member from an outside police agency or community member with a relevant skill set. The interview shall ~~have a maximum value of 100 points~~ shall be scored on a 100-point scale and the officer's score will equate to the number of points received by the interview panel. The candidate must receive a score of 70 percent or higher to continue in the process. ~~Interview process with an interview team selected by the Chief of Police or designee which will consist of at least the following: one Command Officer, one GBPPA Board member and one of the following options~~

- ~~1 GBPD member presently serving on the unit/assignment in question, or~~
- ~~1 member from an outside agency or civilian with appropriate "skill set", or~~
- ~~1 civilian on the following interview panels: School Resource Officer, Mental Health Officer, Youth Coordinator Officer, and Community Policing.~~

~~Officer must receive 70 or higher to continue in the process. The interview will have a value of 100 points and the officer's score will equate to the number of points received by the interview committee. At the officer's request the officer may review their file prior to the interview.~~

e. A Peer Review consisting of:

- Peer review forms will be sent to 10 members of the same rank with whom the candidate currently works. Peer reviewers will be randomly selected. In addition, peer review forms will be given to the member's direct supervisor and one other supervisor. A GBPPA representative shall observe the reviewer selection process.

- Reviews will be in the form of a survey using a 5-point Likert scale to measure peers' opinions of specific skills and abilities related to the specialty position.
- The Peer Review shall be scored on a 100-point scale. The reviews with the highest and lowest scores for each candidate will be discarded, then the remaining scores shall be averaged to determine the final score. ~~If a peer review is required it will be led by the Command Officer of the specialty unit and members of the specialty unit selected by the Chief of Police or designee. Officer must receive 70 or higher to continue in the process. The highest and lowest scored peer reviews shall be disregarded when calculating an officer's score. The peer review will have a value of 100 points and the officer's score will equate to the number of points received by the peer review committee.~~

~~f. Department file review will be conducted by a Police Supervisor and other(s) selected by the Chief of Police or designee. Officer must receive 70 or higher to continue in the process. The department file review will have a value of 100 points and the officer's score will equate to the number of points received for the department file review. Candidates will be given 0-20 points in each category based on the contents of the employees personnel file.~~

~~i. Performance Evaluation Rating – 20 Points: Review all Performance Evaluations. Points based on ratings and evaluations of candidate's performance by Department supervisors throughout the officer's career. Heavier weight given to more recent ratings.~~

~~ii. Discipline History – 20-Points: Review discipline history for patterns of misconduct. Higher points for no discipline. More recent and greater penalties result in loss of points. The older the discipline the less important – for instance, a 10-day suspension served in 2015 would cause a greater loss of points than a 10-day suspension in 2005, assuming there is no pattern of behavior. Consideration given for the amount of time on the job.~~

~~iii. Formal Education - 20 points: Review employees file for formal education beyond high school.~~

~~iv. Department / Police Training – 20 points: Review file for department and police related training taken during the officer's career. Consideration given for the amount of time on the job~~

~~v. Community Policing / Constitutional Policing Orientation – 20 points: How well has the employee demonstrated the~~

~~principles of Community and Constitutional Policing. How well has the candidate worked on improving the quality of life and solving problems for people in the City. Consider Citizen Letters, commendations, assignments, etc.~~

g. Each candidate's cumulative score shall be determined by weighting the interview score at 80 percent and the peer review score at 20 percent.

h. Upon successful completion of the selection process, the ~~officer's~~ candidate's seniority points will be added to their cumulative score for the interview and peer review to reach a final score. Using the ~~officer's~~ candidate's seniority date, ~~officers will~~ the candidate shall receive one point for every 3-complete years of service.

i. ~~Officers~~ Candidates will be ranked by their final overall score and the ~~officer~~ candidate with the most points will be offered the position. In the event of a tie the ~~officer~~ candidate with the highest seniority will be offered the position.

j. The Chief may skip a candidate on the eligibility list with ~~may be skipped for~~ sustained allegations of serious policy violations. The decision to skip a member on an eligibility list for a specialty assignment is subject to the grievance procedure outlined in Article 3, but such grievance does not include the right to grieve prior discipline.

k. If an insufficient number of eligible members apply for a specialty assignment, the Association and the City shall meet and confer as to how to proceed. In the event that the parties cannot reach agreement as to how to proceed, the City may withdraw the specialty assignment posting, or:

- ~~If the parties are unable to reach an agreement,~~ The position shall first be re-posted, opening eligibility to any non-probationary member.
- After that, if there is still an insufficient number of applicants, the position shall be filled by inverse seniority among non-probationary members.

7.2.4 Should the City choose to establish an additional shift or fill a vacancy in any specialty unit, that shift or vacancy shall first be offered to members of that unit by overall seniority.

7.2.5 Should a member choose to leave a permanent specialty assignment, they may do so by requesting the same. If the officer decides to return to regular duty during the first 30-days in the specialty assignment, they shall return

to their previous assignment and shift. After 30-days, if the member leaving the assignment is an Officer, they shall transfer to whatever opening exists in the Patrol Division until such time that openings arise on other shifts and the officer's department seniority allows movement to another shift. A sergeant in this situation shall transfer to whatever patrol sergeant position is available. A detective in this situation shall return to the Detective Division.

~~a. Weighted values of the selection process are as follows:~~

~~(A) 2-Step Selection Process~~

- ~~Interview = 60%~~
- ~~Department File Review = 40%~~

~~(B) 3-Step Selection Process without Peer Review~~

- ~~Written Test = 30%~~
- ~~Interview = 40%~~
- ~~Department File Review = 30%~~

~~(C) 3-Step Selection Process with Peer Review~~

- ~~Interview = 40%~~
- ~~Peer Review = 35%~~
- ~~Department File Review = 25%~~

~~(D) 4-Step Selection Process with Peer Review~~

- ~~Written Test = 25%~~
- ~~Interview = 35%~~
- ~~Peer Review = 25%~~
- ~~Department File Review = 15%~~

~~7.5~~ SCHOOL RESOURCE OFFICER. To be eligible for appointment to the School Resource Officer position, a member must have at least 3-years' experience as a Green Bay Police Officer. Selection shall be as described in Section 7.4.

~~APPOINTMENT TO SCHOOL RESOURCE OFFICER. Qualifications for the School Resource Officer~~

~~Program shall be as follows:~~

~~p. Minimum of 3-years as a Green Bay police officer.~~
~~q. Able to make critical judgments within the scope of responsibility of the position;~~
~~r. Ability to adapt to change;~~
~~s. Maturity;~~
~~t. Emotionally healthy;~~
~~u. Self-control;~~
~~v. Understanding of own and others' feelings;~~
~~w. Ability to handle pressure without overreacting;~~
~~x. Interest in working within the school environment;~~

~~y. Respect for constitutional rights of others;~~
~~z. Ability to communicate effectively with individuals, groups, juveniles and adults;~~
~~aa. Ability to prepare necessary reports and records (i.e. written communications);~~
~~bb. Interest and involvement with juveniles and youths, and/or young adults;~~
~~cc. Knowledge of laws pertaining to juveniles;~~
~~dd. Knowledge of practices relating to building security.~~

~~7.1.9 FILLING VACANCIES AND TENURE AS SCHOOL RESOURCE OFFICER (SRO). Any vacancy for an SRO shall be posted in the department pursuant to the rules for such posting.~~

~~7.1.10 The Selection Committee shall be a 7 member committee made up as follows: 3- representatives from the Green Bay School System, 1- representative from the Green Bay Human Resources Department, and 3- representatives from the Green Bay Police Department, delegated by the Chief of Police.~~

~~7.1.11 An officer not selected as an SRO shall have the right to grieve the decision of the Selection Committee through the grievance procedure. Only reasons capable of objective proof shall be considered in the event that a determination of non- qualification is made and grieved. The SRO Interview process will consist of the following scoring:~~

~~a. Seniority – 25 possible points:~~
~~21 or more years = 25 points~~
~~16-20 years = 20 points~~
~~11-15 years = 15 points~~
~~6-10 years = 10 points~~

~~b. Interview – 30 possible points: 90-100 points = 30 points~~
~~80-89 points = 25 points~~
~~70-79 points = 20 points~~
~~0-69 points = 0 points~~

~~c. Resume/Cover letter - 15 possible points~~

~~d. Scenarios - 30 possible points~~

~~Candidate's overall score from the interview, resume/cover letter and scenarios must be at 70% or higher to continue in the process. Upon successful completion with a score of 70% or higher, the candidate's seniority points will be added to their score for a final~~

~~score. Candidates will be ranked by their final overall score and the candidate with the most points will be offered the position.~~

~~7.1.12 Tenure of the assignment shall be based on the adequate performance of officer and ongoing evaluations by both police and school administrators. If, in the estimation of the school administrators, the officer is~~

~~demonstrably unacceptable, a recommendation would be made to the Chief of Police that the services of the officer as a School Resource Officer in the school be terminated. Upon receipt of said recommendation, the Chief of Police shall notify the officer in question of the recommendation, which notification shall set forth in writing the reasons for the recommendation. In the event the officer does not accept the recommendation, s/he shall have the right to grieve such through the grievance procedure set forth in the labor agreement. Only reasons capable of objective proof shall be considered in the event such a recommendation is made and grieved. If the recommendation is sustained in the grievance, or alternatively, if the officer fails to grieve within the time limits of the grievance procedure, the officer shall be returned to regular duty in the Police Department pursuant to the provisions of 7.1.6 below. If the recommendation is not sustained in the grievance procedure, the officer shall remain as a School Resource Officer.~~

~~7.1.13 Should an officer choose to leave the program, they may do so by requesting the same. If the officer decides to return to regular duty during the first 30-days in the School Resource Officer program, they shall return to their previous assignment and shift. After one year, if the officer leaves the School Resource Officer program, they shall have to return to whatever opening exists in the Patrol Division until such time that openings arise on other shifts and the officer's department seniority allows movement to another shift.~~

7.1.14 School Resource Officers shall receive pay consistent with Schedule A of this Agreement.

7.1.15 The SRO shall work a 5/2 work schedule during the school year. Hours of work for this position shall be 7:00a-3:30p. Summer schedule is a 5-2/4-3 schedule. Each SRO shall accumulate 1-work day every other week while school is in session and bank that day for off time during the summer months. Accumulated banked days cannot be carried over to the next school year.

7.6 CANINE UNIT. To provide maximum availability for normal canine handling duties, newly appointed Canine Unit officers shall not serve on more than one other specialty unit at the same time.

7.4.1 Qualifications for this position are:

a. Minimum of 3-years as a Green Bay police officer.

b. The selection process for Canine Officers will be in accordance with Section 7.4.

c. ~~In addition~~ Prior to the selection process as described in section 7.4, candidates will be required to pass a physical agility test reasonably

designed to measure their ability to perform the Canine Officer role. This test shall be administered on a pass/fail basis; a member must pass the test to continue in the selection process.

d. Notwithstanding Article 7.2.4, the commitment by the officer to remain in the program ~~for~~ shall be 5-years. The commitment requirement is met by the employee spending 3-years in the program. Any officer who enters the program and becomes eligible for promotion during the first 3-years of the program must waive their opportunity for any promotion until the full 3-year commitment to the program is completed unless the parties mutually agree otherwise.

e. For Canine Officers appointed after July 1, 2016 the length of assignment will be 10 years or the work life of 2 of the officer's dogs, whichever is greater. The Canine Officer may be considered for additional Canine Officer assignments by applying for the position.

7.4.2 The Canine Unit shall work 5-days on, followed by 3-days off on a rotating schedule. The Canine Unit shall work 8½-hours per day in the same manner as shift personnel.

7.4.3 The Canine Officer shall be responsible for 17-hours of maintenance training per month on a yearly average. Canine officers shall be paid at straight time pay for up to 171-hours in the 28-day cycle, if the training pushes the officer over the 171-hours they would receive 1½ pay for those hours (this provision is to address training only and is not a waiver of other contractual overtime i.e., time in excess of 8½ hours in a day). Additional training shall be available with supervisory approval.

a. When feasible all canine officers will train together as a unit.

b. Training will be twice per month.

c. Training will be allowed regardless of staffing or call volume, except in emergency situations as determined by the Chief of Police or designee.

7.4.4 The Canine Unit shall submit to recertification training as scheduled by the Department. A Canine Patrol Officer shall adjust their workweek for training purposes and be compensated at the straight time rate for all time spent in recertification training. When the Department adjusts the workweek, an officer's adjusted off day(s) will be placed either immediately before or immediately after the officer's regular off days in the week following recertification training.

7.4.5 Canine demonstrations shall be authorized by the Operations Commander and shall be compensated by compensatory time at straight time on an hour-for-hour basis. Canine demonstrations shall be mutually agreed upon by both the Canine Patrol Officer and the Operations Commander. Mandatory demonstrations shall be paid at 1½-times.

7.4.6 Vacation and other off time shall be administered on an hour for hour basis

in the same manner as shift personnel.

7.4.7 Canine Patrol Officers shall be paid for the same number of hours for holidays as if they were a regular shift employee.

7.4.8 The Canine Patrol Officer shall be allowed to use the Canine vehicle for personal use within the city limits if the Canine partner is along in the car with the officer.

7.4.9 When there is not a GBPD Canine working in accordance with Section 7.3, a GBPD Canine shall be called in by seniority; except that an on-duty Canine Unit from another police agency shall be called in if it is available for immediate response and the time of response is in good faith considered to be as fast as that of an off-duty GBPD Canine
Unit.

~~7.4.10 A retired Canine may be used in exceptional circumstances with the mutual agreement of the City of Green Bay and the Green Bay Police Bargaining Unit.~~

7.4.11 As long as the option outlined in 7.3.10 exists, the City shall be responsible for routine medical costs, but not treatment for illness or injury (except on-duty injuries).

7.4.12 The Canine Patrol Officer shall be subject to the residency requirements as outlined in Article 35, Residency, of the Agreement.

7.4.13 The Canine Patrol Officer shall be paid $195 per pay period for all care and maintenance of the canine. If the Canine Patrol Officer must take the canine to the vet for care, the officer shall receive payback time at the straight time rate for time spent at the veterinary office.

7.4.14 Existing Canine Officers will not be subject to fitness/agility testing identified in 7.2.3(b).

~~7.4.15 Canine Decoys will assist canine handlers during training both on training days and while on shift and attend training as approved by the appropriate supervisor. Canine Decoy requirements are:~~

~~a. Minimum of 3-years as a Green Bay police officer.~~

~~b. The selection process will be in accordance with 7.2.3.i (A).~~

~~c. The number of Canine Decoys will be set by the department based on need.~~

~~d. Canine Decoys will serve in this position for 3-years with an optional 1-year extension with mutual agreement of the parties.~~

~~e. Canine Decoys will rotate training days based on seniority first, and then whoever is next available. If a Canine Decoy cannot make a training day they will not lose their spot on the rotation. A Canine Decoy will only be used when training plans call for a Canine Decoy(s) as approved by the appropriate supervisor.~~

~~f. Officers assigned as a Canine Decoy may, when decoy training school is available, be sent to decoy training once based on length of time remaining in the assignment and seniority.~~

~~g. Canine Decoy officers will train in conjunction with the Canine Team personnel under the Canine Unit training guidelines. Canine Decoy officers may flex their workday to attend training in accordance with 7.21.~~

~~h. Officers engaging in other Canine Decoy duties on their off time will be compensated at time for time payback. Supervisory approval will be required prior to any member flexing their hours or performing duties on their off time.~~

~~i. An officer may only serve as a Decoy for one unit at a time.~~

~~j. Canine Decoys will not be on the Canine call out list.~~

~~k. Canine Decoys may be removed by written request of a majority of the Canine Unit members.~~

7.7 SWAT TEAM.

7.4.1 SWAT Team requirements include:

a. Minimum of 3-years as a police officer.

b. Attend SWAT training as required.

c. Be willing to respond to SWAT call-ups and serve in whatever capacity as required by the OIC on the scene.

d. The selection process will be in accordance with Section 7.4 ~~7.2.3.i.(C)~~.

e. ~~In addition~~ Prior to the selection process as described in Section 7.4, candidates will be required to pass a physical agility test reasonably designed to measure their ability to perform the SWAT role, and a firearms qualification test. These tests shall be administered on a pass/fail basis; a member must pass each test to continue in the selection process.

f. The SWAT Team may train up to ~~12¾~~ 17-hours per calendar month. Upon management approval, the SWAT Team may conduct one (1) 40-hour in-service training per year in addition to the monthly training, for which SWAT Team members shall adjust their work week. ~~and be compensated at the straight-time rate.~~

g. Training hours may not be carried over outside the calendar month except the SWAT Commander may grant exceptions on a case-by-case basis to facilitate special training needs. The compensation for this training shall be actual hours at time for time via payback for those on their off time. All training plans and schedules must be approved by SWAT supervisory personnel. SWAT Team officers may flex their workday to attend training in accordance with ~~7.21~~ Appendix D.

~~h. SWAT snipers are allowed up to an additional 2-hours per calendar~~

~~month, or 4 hours every other month, for specialized sniper training, subject to the provisions in e. above.~~ Nothing in this section prevents SWAT members, with supervisory authorization, from attending additional training related to specialties within SWAT.

i. All SWAT Team members may earn up to 3-hours of time for time payback per month for physical conditioning time. The tracking of these hours shall be monitored between the SWAT Team members and SWAT Command staff.

j. The City shall provide SWAT members with certain basic clothing and safety equipment as needed. (Examples include but are not limited to: kneepads, safety glasses/goggles, basic duty uniform, holster, protective gloves.) The initial costs as well as replacement costs of such equipment shall be based on average costs determined by the SWAT Command staff.

**EXAMPLES:**

k. Night shift officer is scheduled to attend training January 4, 8:00a–4:30p. This takes the place of the officer's shift of January 3. At 9:00p on January 2, (outside 24-hours prior to the affected shift) it is determined the officer's absence would cause the shift of the 3rd to drop below the 2-person buffer. The officer is to be notified they cannot attend the training, and be placed back on the officer's regular shift.

ii. Day shift officer is scheduled to attend training January 4, 8:00a-4:30p. The officer flexes to these hours. It is determined at 6:00a that day that the 2- person buffer is not met. Upon arrival for training the officer could be required to resume normal patrol duties for the remainder of the shift.

iii. Afternoon shift officer is scheduled to attend training January 4, 5:00a-1:30p. This takes the place of the officer's shift of January 4, 2:15p-10:45p. On January 3 at 9:00p, it is determined the 2-person buffer shall not be met due to a sick call-in and injury. This occurred inside the 24-hours, and thus the officer would still be allowed to attend the training and any shift OT would be filled.

iv. The Shift Commander may grant exceptions on a case-by-case basis dependent on the needs of the road. It is the officer's responsibility to adhere to the 14¼ hour maximum hours.

7.4.2 SWAT team members will follow all procedures and guidelines set forth in the SWAT Policy of the Green Bay Police Department. Applicants should review the policy prior to applying.

7.4.3 Members shall be subject to the residency requirements as outlined in Article 35, Residency, of the Agreement.

7.5 ~~CRISIS NEGOTIATOR~~ CRISIS NEGOTIATION TEAM. The department shall maintain up to 6-officers trained as Crisis Negotiators. ~~This cadre of officers shall be managed by the SWAT Command staff.~~

7.5.1 Crisis Negotiator requirements include:

a. Minimum of 3-years as a Green Bay police officer.

b. The selection process will be in accordance with ~~7.2.3.i.(C)~~ section 7.4.

c. Officers currently holding the position of negotiator shall retain their status ~~if~~ as long as desired, subject to removal for cause.

d. Crisis Negotiators shall train up to 4-hours per month. The ~~SWAT Commander~~ CNT Supervisor may grant exceptions on a case-by-case basis to facilitate special training needs. The compensation for this training shall be actual hours at time for time via payback for those on their off time. All training plans and schedules must be approved in advance by ~~SWAT~~ CNT supervisory personnel.

e. Crisis Negotiators may flex their workday to attend training in accordance with Appendix D.~~7.21.~~

f. Negotiators shall be trained in Command Post Bus and CAD operation.

f. Crisis Negotiators shall be provided with clothing identifying them as a Negotiator for use during official call-outs ~~and as requested by SWAT Command staff. This item shall be determined by the SWAT Commander and replaced as necessary~~.

g. Management reserves the right to determine how many Crisis Negotiators are required in the event of a call-in. Call-~~in's~~ ins shall be compensated per Article 6 of this Agreement.

h. Crisis Negotiators shall be subject to the residency requirement as outlined in Article 35 of this Agreement.

~~7.5.2 SWAT Decoy: SWAT Decoy requirements are:~~

~~a. Minimum of 3-years as a Green Bay police officer.~~

~~b. The selection process will be in accordance with 7.2.3.i (C).~~

~~c. The number of SWAT Decoys will be set by the department based on need.~~

~~d. SWAT Decoys will serve in this position for 3-years with an optional 1-year extension with mutual agreement of the parties. If no other officer applies for a SWAT Decoy position a current SWAT Decoy may apply for an additional 3-years. If there are enough officer(s) applying for a new posting, a current SWAT Decoy will not be eligible to reapply until all other officers have had a chance to work as a SWAT Decoy.~~

~~e. SWAT Decoys will rotate training days based on seniority first, then whoever is next available. If a SWAT Decoy cannot make a training day they will not lose their spot on the rotation. A SWAT Decoy will only be~~

~~used when training plans call for a SWAT Decoy(s) as approved by the appropriate supervisor. SWAT Decoy officers may flex their workday to attend training in accordance with 7.21.~~

~~f. Officers engaging in other SWAT Decoy duties on their off time will be compensated at time for time payback. Supervisory approval will be required prior to any member flexing their hours or performing duties on their off time.~~

~~g. An officer may only serve as a Decoy for one unit at a time.~~

~~h. SWAT Decoys will not be on the SWAT call out list.~~

~~7.5.3 Members of SWAT and SWAT Decoys may be removed by written request of the team leader and a majority of the SWAT members.~~

7.8 FTO PROGRAM. Officers performing the duties of a field training officer shall be compensated at a rate of $1.25 per hour for time actually spent training officers under the program. Management maintains its right to make FTO assignments from the existing pool of qualified FTOs. The officers so chosen shall serve as FTOs upon assignment until the Chief of Police or designee and the officer's removal.

7.5.1 FTO requirements include:

a. Minimum of 3-years as a Green Bay police officer.

b. The selection process will be in accordance with 7.4. ~~7.2.3.i.(B)~~.

7.5.2 FTOs may flex the hours in their workday to attend meetings, training, or conduct training.

7.5.3 FTOs attending meetings, training, or conducting training on their off day, or outside their regular hours, shall be compensated at time for time payback.

7.5.4 The expectation of the FTO is to complete all Daily Observation Reports (DOR) by the end of the work shift that is being evaluated, or prior to the start of the next work shift. With prior approval from a Field Training Supervisor (FTS) an FTO may finish the DOR at the end of the work shift being evaluated, or prior to the next work shift. Such time will be compensated at time for time payback.

7.5.5 Supervisory approval will be required prior to any FTO flexing their hours or performing work outside their regular duty hours.

7.9 COMMUNITY POLICING UNIT (CPU).

7.6.1 CPU requirements include:

a. Minimum of 3-years as a Green Bay police officer.

b. The selection process will be in accordance with Section 7.4. ~~7.2.3.i.(D)~~.

7.6.2 Job Duties. CPU Officers shall be assigned geographical boundaries with the basic mission to interact with the neighborhood and community with

the officers using their own initiative in solving problems and meeting neighborhood and community needs. Specific job duties shall be determined and set by the department from time to time.

7.6.3 Shift Assignments. CPU Officers appointed after June 22, 2016, shall be assigned to the midday shift in the patrol division. Core hours for all newly appointed CPs will change from afternoon (2:15p-10:45p) to midday (10:30a-7p), but all current CPs shall retain their current core hours and corresponding shift differential.

7.6.4 Shift Schedule Deviations. With supervisory approval CPU Officers may voluntarily deviate from the afternoon shift schedule to accommodate the neighborhood/ community needs as long as hours consistent with the 5/3 schedule are maintained.

7.6.5 Excess Hours. Hours approved by a supervisor that are worked in excess of the scheduled workday shall be compensated in accordance with Article 6. An exception is when the approved work is performed at the initiative of and voluntarily by the officer to meet the needs of the officer's neighborhood community. These hours are compensated at straight time off in compliance with FLSA limitations. No officer may alter a work schedule for the sole purpose of qualifying for posted overtime with the exception of Packer Games.

7.6.6 Vacation. CPU Officers shall select vacation separate from the afternoon shift of the Operations Division, however may not schedule the same time period as their geographical partner without approval of the supervisor.

~~7.6.7 Youth Coordinator Officer (YCO): Requirements of this position include:~~

~~a. Minimum of 3-years as a Green Bay police officer.~~

~~b. The selection process will be in accordance with 7.2.3.i.(A).~~

~~c. The YCO will not count toward shift staffing.~~

~~d. Core hours midday (10:30a-7p) Administrative schedule Tuesday–Saturday, Tuesday–Friday.~~

~~e. YCO shall select vacation separate from the Mid-Day shift of the Operations Division.~~

~~f. This will be a 3-year assignment, with a possible extension of an additional 1-year. Upon completion of this assignment, the officer will return to the division where the officer left and slot in where the officer's seniority will take them. The officer may apply for an alternative position available by department wide posting during or at the completion of this assignment. Once an officer accepts and is assigned to the position as a Youth Coordinator Officer, that officer will not be eligible for another YCO assignment until all other eligible officers have had an opportunity to accept and be assigned to the YCO position.~~

~~g. As part of the CPU, the YCO position will subject to provisions of 7.6.2 and 7.6.4–7.6.6.~~

7.6.8 Other Assignments. Except in cases of emergency, CPU ~~and YCO~~ Officers shall not be reassigned, or voluntarily work to fill minimum staffing, CPU Officers will not be assigned to or voluntarily work posted special events outside of their community policing zone.

7.6.9 NEIGHBORHOOD RESPONSE TEAM (NRT): The Neighborhood response team shall be comprised of officers from the operations division (number determined by the chief of police) who shall perform similar duties as a Community Police Officer but shall not be assigned to a particular neighborhood. The NRT shall be used, in whole or part, in conjunction with investigations, patrol
and community police to focus directed patrol strategies to include but not limited to gun violence, violent crime, and social disorder. Requirements of NRT Officer include:

a. Minimum of 3-years as a Green Bay Police Officer

b. The Selection process will be in accordance with Section 7.4. ~~7.2.3.i. c.~~

c. NRT Officers will not count towards safety staffing levels.

d. Core hours will be 4:00 PM to 12:30 AM ~~PM~~ on a 5/3 work schedule

e. NRT officers may flex their workday up to and including afternoon shift or evening shift only.

f. Vacation. Up to 50% NRT Officers shall be allowed off for vacation or other time off unless approval is obtained from the supervisor. In the event there are an odd number of NRT officers, the eligibility for vacation will be rounded up.

g. Excess Hours. Hours approved by a supervisor that are worked in excess of the scheduled workday shall be compensated in accordance with Article 6. An exception is when the approved work is performed at the initiative of and voluntarily by the officer to meet the needs of the officer's duties. These hours are compensated at straight time off in compliance with FLSA limitations. No officer may alter a work schedule for the sole purpose of qualifying for posted overtime with the exception of Packer Games.

h. Shift differential: NRT will receive shift differential of four hours a month per article 11.1

i. Other Assignments. Except in cases of emergency, NRT Officers shall not be reassigned, or voluntarily work to fill minimum staffing or special events.

7.10 DIVE TEAM:

7.7.1 Dive Team requirements include:

a. Minimum of 3-years as a Green Bay police officer.

b. The selection process will be in accordance with Section 7.4. ~~7.2.3.i.(C).~~

c. ~~In addition~~ Prior to the selection process as described in section 7.4, candidates will be required to pass a physical agility test reasonably designed to measure their ability to perform the Dive Team role. This test shall be administered on a pass/fail basis; a member must pass the test to continue in the selection process.

d. The training of the dive team shall be up to 12-training sessions per year. Training shall be preapproved by the dive team supervisor. The number of training sessions may be increased with the approval of the Chief of Police. It's contemplated that training sessions shall include all members of the dive team for training. Training that can be conducted by dive team members may be done in smaller groups. Dive team members may not attend training as a part of their work day if the attendance creates overtime on their shift.

e. Members may flex their work day or receive payback compensation for attending or conducting dive related meetings and/or training on their work day. Members attending or conducting dive related meetings, equipment maintenance and/or training on their off time shall be compensated at time for time payback. Supervisor approval shall be required prior to any member flexing their hours or performing duties on their off time. Flexing shall be consistent with Appendix D.

f. Members must be willing to respond to Dive Team call-ups pursuant to the procedures for allocation of overtime assignments under Article 6, and perform the duties as required by the OIC in charge (i.e. drivers, line tenders or other duties) excluding assignment as boat driver.

g. Members must attend SCUBA certification training and any other training deemed necessary by the Dive Team Commander.

h. Members must follow all procedures and guidelines set forth in the Dive Team Policy of the Green Bay Police Department. Applicants should review the policy prior to signing up.

i. Dive Team Members shall be subject to the residency requirements as outlined in Article 35, Residency, of the Agreement.

j. All Dive Team members may earn up to 3-hours of time for time

payback per month for physical conditioning time. The tracking of these hours shall be monitored between the Dive Team members and the supervisor.

7.7.2 Dive Support officers will be responsible for providing support for the Dive Team in the area of equipment maintenance and operation, diver line tending, general assistance to the divers, and other duties as needed. Dive Team Support Officer requirements include:

a. Minimum of 3-years as a Green Bay police officer.

b. The selection process will be in accordance with 7.2.3.(C).

c. The department will maintain up to 6-Dive Support officers.

d. Management reserves the right to determine how many Dive Support officers are required in the event of a call-in. Call-ins will be compensated per Article 6.

e. Dive Support officers will train in conjunction with the Dive Team personnel under the Dive Team Training guidelines. The Dive Commander may grant exceptions on a case-by-case basis to facilitate special training needs. Dive Support officers may flex their workday to attend training in accordance with Appendix D ~~7.21~~.

f. Officers engaging in other Dive Support duties on their off time will be compensated at time for time payback. Supervisory approval will be required prior to any member flexing their hours or performing duties on their off time.

g. When an opening for a position of Diver becomes available, the position will first be offered to Dive Support officers by seniority, prior to a general department posting.

7.7.3 Members of the Dive Team may be removed by written request of the team leader and a majority of the Dive Team members.

7.11 MARINE UNIT: When trained, officers assigned to the unit shall be deemed qualified to receive assignment to patrol the Fox River within the City of Green Bay and operate the Dive Team Boat under the procedures for allocation of overtime assignments contained in Article 6. The Marine Unit or Dive Team is at the mercy of the weather; therefore, the assignment may be cancelled at any time prior to the scheduled starting time without relief. Once the assignment starts and, in the case of the Marine Unit if it was scheduled for 3-hours or more, there shall be a minimum of 3-hours paid. The decision to cancel a Marine Unit assignment shall be made by a Marine Unit supervisor or the Shift Commander.

7.8.1 The department will create a Marine Unit, whose duty will be operation of the department watercrafts for purposes of harbor patrol and boat operation, including all related equipment, both for general harbor patrol duties, and watercraft operation in support for the department Dive Team.

Marine Unit requirements include:

a. Minimum of 3-years as a Green Bay police officer.

b. The selection process will be in accordance with Section 7.4. ~~7.2.3.i.(C).~~

c. ~~In addition~~Prior to the selection process as described in section 7.4, candidates will be required to pass a physical agility test reasonably designed to measure their ability to perform the Marine Unit role. This test shall be administered on a pass/fail basis; a member must pass the test to continue in the selection process.

d. The department will maintain a minimum of 10-officers in the Marine Unit.

e. Management reserves the right to determine how many Marine Unit officers are required in the event of a call-in. Call-ins, as well as posted harbor patrol details will be compensated per Article 6.

f. Marine Unit officers will receive training in general watercraft operation, care, operation and maintenance of related equipment, navigation training, related waterway laws, and skills required for operation around divers.

g. Marine Unit officers will train up to ~~3~~ 8-hours per month ~~during the months the department watercraft are in the water and available for immediate deployment~~. The Marine Unit Commander may grant exceptions on a case-by-case basis to facilitate special training needs. Officers will train on a rotating basis with the Dive Team as scheduled by the Dive Team supervisory personnel. When not assigned to Dive Team training that month, the remaining Marine Unit officers will train separate from the Dive Team. Compensation for training will be actual hours at time for time via payback for those on their off time.

h. Marine Unit officers may not attend training or perform equipment maintenance as part of their workday if the attendance creates overtime on their shift. Marine Unit officers may flex their workday to attend training in accordance with Appendix D ~~7.21~~.

i. Officers engaging in other non-call-in Marine Unit duties on their regular off time will be compensated at time for time payback. Supervisory approval will be required prior to any member flexing their hours or performing duties on their off time.

7.12 COMMUNITY CRISIS INTERVENTION TEAM (CCIT):

7.9.1 CCIT requirements include:

a. Minimum of 3-years as a Green Bay police officer.

b. The selection process will be in accordance with Section 7.4. ~~7.2.3.i.(A).~~

Commented [CD1]: Check reference

7.9.2 The purpose of the CCIT is to:

a. Establish a task force of officers to become the CCIT experts for the department.

b. Track CCIT related calls for service to assist with analyzing mental health issues and calls for services to allow for the adoption of a problem-solving approach to mental health issues.

c. Enhance community awareness and safety through information sharing.

d. Increase officer safety through training and effective information sharing.

e. Enhance community safety and reduce department workload by connecting consumers with services to help solve underlying problems thus trying to reduce chronic repeated calls with the same individual.

7.9.3 Composition/Method of Selection: The Department will attempt to assign officers from the following shifts:

| | | |
|---|---|---|
| 3-Day Shift | 2-Midday Shift | 3-Afternoon Shift |
| 2-Evening Shift | 3-Night Shift | 3-Community Police |
| 3-School Resource | 2-Detective | |

The number of members assigned per shift shall be maintained. If a vacancy occurs because of a member leaving the shift or the team, then the position shall be posted for that shift. Those officers currently possessing the initial 40-hour introductory training through National Association on Mental Illness at the time the initial team posting comes down, shall become voluntary members of the team if they choose (aka: grandfathered) and be eligible for all provisions of 7.9. Should an officer choose to move to another shift or position, the officer shall be allowed to participate, but shall not be eligible for training and compensation provisions of 7.9. Any such officer may post back into full team status via future postings.

7.9.4 Training Opportunities: Members selected to the CCIT shall receive CCIT and mental health related training. Members shall then select a CCIT specialty (two to three members per specialty), such as Post Traumatic Stress Disorder (PTSD), Schizophrenia, Alzheimer's and Elder care issues, etc. for focused training. The number of members in a specialty area and the selection of a specialty shall be made between the members of the CCIT and their supervisor with the supervisor having the final decision. The member shall then voluntarily attend any professional meetings and/or training within the employee's specialty. Specialized and non-specialized training opportunities and meetings shall be rotated among the members of the CCIT.

7.9.5 Compensation: Members attending CCIT related meetings and/or training shall be allowed to flex their hours in their work day. Members attending CCIT related meetings and/or training on their off day shall be compensated at time for time rate via payback. Members shall be allowed to voluntarily perform CCIT duties on their off time and shall be compensated at time for time rate via payback. Members who present or conduct training outside of their normal work hours shall be compensated

at time for time via payback. Members shall be compensated for travel time and such travel time shall be included in the total sum of time beginning when members leave the GBPD and end when they return to the department. Supervisory approval shall be required prior to any member flexing their hours or performing duties on their off time. Under no circumstances shall an officer receive contractual overtime based on their membership in the CCIT. All compensation must be in compliance with the Fair Labor Standards Act.

7.9.6 Duties: The following duties shall be in addition to the duties of the officer in their current capacity:

a. Conduct follow-up investigations and analysis of CCIT related activity.

b. Present to community groups about CCIT, mental health issues and the department response.

c. Participate in and represent the GBPD at professional law enforcement organization meetings regarding CCIT and mental health issues.

d. Participate in and represent the GBPD at mental health organization meetings regarding CCIT and mental health issues.

7.9.7 In the event the Department implements mandatory CCIT training for all sworn members, Sections 7.12 shall become moot. In this event, the Department shall establish a CCIT Coordinator position in the Behavioral Health Unit to coordinate CCIT training for all members.

7.10 ~~Mental Health Officer (MHO)~~ Behavioral Health Unit (BHU): ~~MHO~~ BHU requirements are:

7.10.1 Minimum of 3-years as a Green Bay police officer.

7.10.2 The selection process will be in accordance with Section 7.4. ~~7.2.3.i.(A).~~

7.10.3 Officers selected for the ~~MHO~~ BHU position will attend and complete the 40-hour CIT Certification Course.

7.10.4 Officers will be assigned to an administrative schedule, (5-2, 4-3); ~~Monday – Friday and Tuesday-Friday;~~ the primary hours will be 10:30 am-7:00 pm.

7.10.5 Except in cases of emergency, ~~MHOs~~ BHU Officers shall not be reassigned, or voluntarily work to fill minimum staffing.

7.10.6 With supervisory approval ~~MHOs~~ BHU Officers may voluntarily deviate from their shift schedule to attend meetings, appointments, etc. as long as hours consistent with the Administrative schedule are maintained.

7.10.7 ~~MHOs~~ BHU Officers shall select vacation separate from the Mid-Day shift of the Operations Division.

7.10.8 Hours approved by a supervisor that are worked in excess of the scheduled workday shall be compensated in accordance with Article 6. An exception is when the approved work is performed at the initiative of and voluntarily

by the officer to meet the needs of the officer's assignment in the BHU.~~as MHO~~. These hours are compensated at straight time off in compliance with FLSA limitations. No officer may alter a work schedule for the sole purpose of qualifying for posted overtime with the exception of Packer Games. (CPTE)

7.10.9 This will be a 3-year assignment, with a possible extension of an additional 1-year. Upon completion of this assignment, the officer will return to the division where the officer left and slot in where the officer's seniority will take them. The officer may apply for an alternative position available by department wide posting during or at the completion of this assignment. An Officer may reapply but the list of candidates must be exhausted prior to receiving an additional assignment.

7.13 ~~CRITICAL INCIDENT STRESS MANAGEMENT TEAM (CISM)~~ PEER OFFICER SUPPORT TEAM (POST):

7.10.1 The purpose and requirements of ~~the~~ ~~CISM~~ POST ~~team~~ are:

a. Establish a team of officers to become skilled in facilitating ~~CISM~~ critical incident stress related debriefings, defusing, managing, supporting and educating officers involved in critical incidents.

b. Provide individual, voluntary and confidential coaching for officers in trauma recognition and resolution, job stress management strategies, and professional growth and development.

c. Minimum of 3-years as a Green Bay police officer.

d. The selection process will be in accordance with ~~7.2.3.i.(B)~~ Section 7.4.

~~7.10.2~~ Composition/Method of Selection: The Department will make reasonable efforts to evenly distribute POST assignments to each shift and assignment. ~~The senior officers from the following shifts/ divisions who apply for this Team will be selected~~ ~~In order to maintain even coverage across shifts and assignments for POST members, positions on the team shall be allocated as follows~~~~:~~

| | | |
|---|---|---|
| ~~3-Day shift~~ | ~~2-Midday shift~~ | ~~3-Afternoon shift~~ |
| ~~2-Evening shift~~ | ~~3-Night shift~~ | ~~2-Community Police Officers~~ |
| ~~2-Detective Division~~ | ~~2-School Resource Officers~~ | |

~~The number of POST members assigned per shift shall be maintained. If a vacancy occurs because of a member leaving the shift or the team, then the position will be posted for that shift. Should an officer choose to move to another shift or position, the officer will be allowed to participate, but will not be eligible for training and compensation provisions of this provision. Any such officer may post back into full team status via future postings.~~

7.10.3 Training Opportunities: Members selected to the ~~CISM~~ POST will receive ~~CISM related~~ training related to the team's functions. Members will then

select a ~~CISM~~ POST specialty such as Debriefing, Defusing, Grief and Loss, Crisis Management Briefing, Critical Incident Adjustment Support or Pre-Crisis Education. The number of members in a specialty area and the selection of a specialty will be made between the members of the ~~CISM~~ POST and their supervisor with the supervisor having the final decision. The member will then voluntarily attend any professional meetings and/or training within ~~the employee's~~ their specialty. Specialized and non-specialized training opportunities and meetings shall be rotated among the members of the ~~CISM~~ POST.

7.10.4 Compensation: Members attending ~~CISM~~ POST related meetings and/or training shall be allowed to flex their hours in their workday. Members attending ~~CISM~~ POST related meetings and/or training on their off day shall be compensated at time for time rate via payback. Members will be allowed to voluntarily perform ~~CISM~~ POST duties on their off time and will be compensated at time for time rate via payback. Members who present or conduct training outside of their normal work hours will be compensated at time for time via payback. Members will be compensated for travel time and such travel time will be included in the total sum of time beginning when members leave the GBPD and end when they return to the department. Supervisory approval will be required prior to any member flexing their hours or performing duties on their off time. Under no circumstances will an officer receive overtime based on their membership in the ~~CISM~~ POST.

7.10.5 Duties: The following duties will be in addition to the duties of the officer in their current capacity:

a. Facilitate critical incident debriefing at shift level and department level.
b. Provide private crisis intervention services as needed, while working within level of competence and make appropriate referrals.
c. Communicate ongoing information to the ~~CISM~~ POST coordinator after deployment.
d. Attend and facilitate ~~CISM~~ POST training to maintain skills and abilities.
e. Update peer support nomination/information forms to reflect current experience, education, and training in crisis management.

7.14 <u>HONOR GUARD UNIT:</u>

7.11.1 Honor Guard requirements include:

a. There are no minimum years of experience required. There will be a Department wide posting and selection based on seniority.

7.11.2 Honor Guard members selected to participate in Honor Guard Unit events shall be allowed to flex the hours in their workday for the purpose of travel to and/or attendance at events as requested by the Honor Guard Commander or designee.

7.11.3 This is intended to primarily apply to events where attendance at the event would serve as part or all of their workday depending on the length of the event.

7.11.4 Events short in nature, generally under 5-hours in length, shall continue to be compensated via payback for those on their normal off time.

7.11.5 Voluntary training attended by a member on their normal off time shall be compensated at a time for time rate via payback.

7.15 POLICE MOTORCYCLE OPERATOR/INSTRUCTOR:

7.12.1 Motorcycle Operator Qualifications:

a. Minimum of 3-years of service as a ~~Green Bay~~ full-time, sworn police officer.

b. Current Class M (motorcycle) endorsement.

c. Successful completion of the Motorcycle Operator certification course.

d. Position openings will be based on needs and/or openings on a shift. The Chief will post department wide the number of positions available to attend the Motorcycle Operator certification course. If more officers sign to attend the Motorcycle Operator certification course than positions available or anticipate being available, then seniority will determine who attends the training.

7.12.2 Motorcycle Instructor~~/Operator~~: In addition to all requirements in 7.12.1:

a. Successfully complete a nationally recognized Police Motorcycle Instructor Course.

b. Successfully complete Instructor recertification.

c. The selection process will be in accordance with Section 7.4. ~~7.2.3.i.(B).~~

7.12.3 Police motorcycle instructors shall perform instruction under the same guidelines as members of the Training Unit with regards to compensation and flexing of work days/hours.

~~7.12.4 Police Motorcycle operators shall be selected from the Community Police from all shifts.~~

7.12.5 All other standards set forth in the GBPD Motorcycle Unit Policy ~~6-2 Motorcycle Unit~~ shall apply.

7.16 TRAFFIC CRASH RECONSTRUCTION TEAM:

7.13.1 Requirements include:

a. Minimum of 3-years as a Green Bay police officer.

b. The selection process will be in accordance with 7.2.3.i.(B).

7.13.2 New members shall not be limited to those in the uniformed Patrol Division. ~~Officers being awarded this status~~ Members assigned to the team must successfully complete extensive initial training sessions for the

position. ~~Officers~~ Team members shall flex their workday/workweek to attend Traffic Reconstruction Team training.

7.13.3 The desirable qualification of the Traffic Crash Reconstruction Team is a commitment by the officer to remain on the team for 5-years. Any officer who enters the program and becomes eligible for promotion during the first 3-years of the program must waive the officer's opportunity for any promotion until the full 3-year commitment to the program is completed.

7.13.4 Should an officer accept a position outside of the patrol division, excluding promotion to Command Officer rank, such officer shall retain the officer's status as a Traffic Crash Reconstruction Team member.

7.13.5 A Traffic Crash Reconstruction Team member may elect to discontinue the officer's status as a member after satisfying the 5-year commitment.

7.13.6 It is contemplated that this team shall be comprised of 4-members.

7.17 TRAINING UNIT: To establish a formal Training Unit made up of officers and supervisors responsible for providing continuing training in the Green Bay Police Department. The Department shall determine the number of officers in the Training Unit and the subjects of training for members of the Department. The Training Unit shall relate to training in the certifications of firearms, DAAT, EVOC, professional communications and vehicle contacts.

7.14.1 Training Unit requirements include:

a. Minimum of 3-years as a Green Bay police officer.

b. The selection process will be in accordance with Section 7.4. ~~7.2.3.(B).~~

~~c. Rangemaster must receive DAAT and Firearm certification within 6-months of appointment. If selected candidate does not have the necessary training at the time of appointment, DAAT and Firearm training will be paid by the Police Department.~~

7.14.2 Composition of Unit. The Training Unit shall be comprised of members of the GBPD. One-half of the members of the Training Unit may come from the supervisors of the Department. One-half of the Training Unit shall come from members of the Police Association. Note: Management reserves the right to determine the supervisors who shall be part of the unit on an annual basis. ~~The Rangemaster position and duties of that position shall continue to be a GBPPA bargaining unit position. The Rangemaster position shall be included as part of the Training Unit.~~ The ~~Professional Standards~~ Training Unit supervisory staff may assign the Range Master to other shifts or work hours on their normal workday for training purposes.

7.14.3

~~7.14.4~~ Selection of Trainers. The complement of trainers would be selected from officers from Days/Special (excluding SROs and DTFs), Afternoons/CPOs,

Evenings/Nights and the Detective Division. ~~These officers constitute the Core Training Unit. Once the Core Training Unit is formed the number maintained per shift shall be at the discretion of the Professional Standards Division (PSD), provided that the number shall not fall below the number set forth above. If the initial complement of Core trainers is expanded or needs to be replaced, the posting process shall be followed. Current officers not selected for the Core Training Unit, but who have active certification in one or more disciplines shall be included in the Training Unit as Non-Core members with the approval of the PSD. Any recertification shall be the responsibility of the officer; however the department may offer recertification training.~~

7.14.5 Participation in Training Unit. Any Training Unit members who receive department sponsored training shall be committed to the Unit for 4-years. ~~Core Training Unit members who change from the shift where they had posted into the Core Training Unit status shall no longer retain their Core status; however, assignment to another shift, division or promotion shall not disqualify them from continuing in the Training Unit as a Non-Core Training Unit member or relinquish the member of their commitment to the Training Unit. Any Core Training Unit member who changes from the shift where they had posted into the Core position cannot automatically take an open Core Training Unit position on the destination shift without posting for the open position.~~ The Training Unit members may be directed to use their skills in any department position as directed by the Training Unit supervisory staff. ~~PSD~~.

7.14.6 Assignment of Training. A minimum of 50% of the training assignments in any calendar year (on an hour-by-hour basis) shall be assigned to members of the Association. ~~The Rangemaster shall continue to perform firearms and DAAT training and all other training of department members on firearms and DAAT shall be shared on an equal (50%/50%) basis between supervisors and nonsupervisory officers.~~ All training that Training Unit members attend shall be compensated under Article 29 of the Collective Bargaining Agreement with payback. All Training Unit meetings and training provided by Training Unit members who are instructing shall be compensated at time for time payback. Any time spent by a trainer in addition to 8½-hours conducting training shall be compensated at time and a half.

Unit members agree they are volunteering to change shifts as directed by the ~~PSD~~ Training Unit. The ~~PSD~~ Training Unit may assign instructors to other shifts or work hours for training purposes. The Department shall provide a 14-day notice for involuntary flexing of hours. The ~~PSD~~ Training Unit may assign instructors to other shifts or work hours for in-service. Training Unit officers/supervisors conducting any training shall be required to document the training as directed by the ~~PSD~~ Training Unit and submit

the documentation to the ~~PSD~~ Training Unit.

~~7.14.7~~ Selection for Education Opportunities. ~~Core~~ Training Unit members shall receive first opportunity for any training in any discipline in the Training Unit by seniority by shift~~. Any training opportunity not filled by a Core Training Unit member would then be offered to a Non-Core Training Unit member having a discipline related to the offered training. Non-Core Training Unit members shall be restricted to training within their discipline. Any instructor certification course or training not taken by Core Training Unit members and outside of the discipline restriction requirement of the Non-Core Training Unit members will be posted department wide.~~

Training opportunities for each shift shall be determined on the basis of the needs of the shift and after the consultation with the Training Unit members and Association representatives. If only one officer is to be trained in a certification, the training will be determined by the Police Department from the ~~Core~~ Training unit membership. In addition to the Rangemaster, the two nonsupervisory ~~Core~~ Training Unit members on each shift shall be trained and be eligible for recertification training in Firearms and DAAT certifications. These officers shall be eligible for training and recertification training in other certifications.

7.14.8 This Training Unit defines and deems "training" as neither a supervisory nor non- supervisory duty assignment, nor a duty assignment which may be performed by either supervisors or non-supervisors.

7.18 PROFESSIONAL STANDARDS DIVISION OFFICER POSITION:

7.15.1 Officers shall be selected from the pool of ~~active~~ Field Training Unit Officers (FTOs) ~~and the active Training Unit members (both core and non-core)~~, ~~one officer from each unit~~. ~~"Active" is defined as those FTOs regularly assigned to administer training to a probationary officer for one or more of the four steps in the Field Training Process. An active Training Unit member is one who is regularly tasked to provide/develop training for department personnel.~~ To qualify, an FTO must have previously been assigned at least one probationary officer for a minimum of one "step" as prescribed in the FTO program process. The active FTO~~/Training Unit~~ lists to be used for selection shall be those maintained by the FTO Commander/Professional Standards Division (PSD).

7.15.2 Officers shall be assigned to this position for a 2-year, non-renewable period, regardless of the unit they were assigned from (FTO or Training). There is no time commitment to this position, however, once an officer accepts the position and leaves, whether by choice, completion of the assignment, or removed for cause, the officer shall not be eligible to re-apply.

7.15.3 Upon completion of this assignment, officers shall return to the opening

available in the division they vacated, (Operations or Investigations) unless they post into an alternate position available at the completion of this assignment.

7.15.4 Officers shall be assigned to an administrative schedule, (5-2, 4-3), primary hours 7:00
a.m. to 3:30 p.m., with flexible hours dependent on the duties required. All flexing of hours require supervisory approval.

7.15.5 Officers retain the ability to sign for all overtime they would have been eligible for had they not accepted the PSD position.

~~7.19 GANG IDENTIFICATION TASK FORCE (GITF):~~

~~7.16.1 The purpose and requirements for the GITF include:~~

~~a. Minimum of 3-years as a Green Bay police officer.~~

~~b. The selection process will be in accordance with 7.2.3.i.(C).~~

~~c. Establish a task force of officers to become the gang "experts" for the department.~~

~~d. Enhance community awareness and safety through information sharing.~~

~~e. Increase officer safety through effective information sharing.~~

~~f. Increase investigative effectiveness through information handling.~~

~~7.16.2 Composition and Method of Selection. 2 officers from the following shifts/divisions who apply for this Team will be selected:~~

| | | |
|---|---|---|
| ~~Day Shift~~ | ~~Midday Shift~~ | ~~Afternoon Shift~~ |
| ~~Evening Shift~~ | ~~Night Shift~~ | ~~Community Police~~ |
| ~~School Resource~~ | ~~Detective~~ | ~~Animal Control~~ |

~~The number of members assigned per shift shall be maintained. If a vacancy occurs because of a member leaving the shift or the unit, then the position will be posted for that shift.~~

~~7.16.3 Training Opportunity. Members selected to the GITF will receive general gang related training. Members will then select a gang specialty (2-3 members per specialty), for focused training. The number of members in a specialty area and the selection of a specialty will be made between the members of the GITF and their supervisor with the supervisor having the final decision. The member will then voluntarily attend any professional meetings and/or training within their specialty. Specialized and non-specialized training opportunities and meetings shall be rotated among the members of the GITF.~~

~~7.16.4 Compensation. Members attending gang related meetings and/or training shall be allowed to flex their hours in their work day. Members attending gang related meetings and/or training on their off day shall be compensated at time for time rate, pay back. When mutually agreed upon and with supervisor approval, members will be allowed to voluntarily~~

~~perform GITF duties on their off time and will be compensated at time for time, pay back. Supervisor approval will be required prior to any member flexing their hours or performing duties on their off time. Members will be compensated for travel time. Travel time will be calculated as follows: travel time will start when a member leaves the GBPD and arrives at the location of the training. After the training, travel time will resume from the training location and end when the member arrives back at the GBPD.~~

~~7.16.5 The following duties will be in addition to the duties of the officer in their current capacity.~~

~~a. Determine criteria for inclusion of suspected gang members into the gang database.~~

~~b. Analyze gang graffiti for content and commonality to determine origin.~~

~~c. Gather gang intelligence by gleaning information from police reports, through interviews of informants/gang members and by responding to gang related calls if officer availability allows.~~

~~d. Conduct follow-up investigations into gang related activity.~~

~~e. Maintain GBPD and other designated intelligence gang databases.~~

~~f. Train officers in gang recognition and gang enforcement techniques.~~

~~g. Present to community groups about gang awareness, recognition and response.~~

~~h. Participate in and represent the GBPD at professional law enforcement organization meetings regarding gang enforcement.~~

~~7.16.6 Reports related to gang activities shall be forwarded to members of the GITF for analysis. Members of the GITF shall not be given any special overtime opportunities based on their membership in the GITF.~~

7.20 DRUG TASK FORCE (DTF).

7.17.1 DTF requirements include:

a. Minimum of 3-years as a Green Bay police officer.

b. The selection process will be in accordance with Brown County's process.

7.17.2 Shift:

a. DTF shift will be a 5/2 – 4/3 schedule.

b. Shifts will commence at 11:30a–8p.

c. If court is scheduled for 10a or 10:30a, the officers will flex their shift (10a–6:30p).

d. If court starts before 10a, then the officer gets the court overtime.

7.17.3 Length of Term. Officers shall have a 4-year commitment with no ability to re-up. Officers assigned to DTF shall have their current assignment credited toward that 4-year period (e.g., officer XX has been there 1½ years, so

Officer X will have an additional 2½ years). The increased commitment will benefit the police officer, police department and the DTF. It will allow for training, schools, etc. that can only be justified with a longer commitment.

7.17.4 Assignment to DTF & Interview Panel. An interview process is acceptable – utilizing the BCSD's current system, as long as the GBPD union has a seat on that panel (the GBPD sitting on the panel for a GBPD interview). In addition, officer candidates shall no longer be limited based upon seniority – it shall be opened up to all officer's holding the rank of Advanced Police Officer (APO) and above.

7.17.5 Flex Time & Vacation Days. Officers must provide a minimum 24-hour advance notice when requesting vacation. ~~and f~~ Flex time shall be determined consistent with Appendix D.

7.21 TRAFFIC OFFICERS:

7.18.1 Traffic Officer requirements include:

a. Minimum of 3-years as a Green Bay police officer.

b. The selection process will be in accordance with 7.2.3.i.(C).

7.18.2 Officers will be assigned to an admin schedule 5-2 Monday thru Friday, 4-3 Monday thru Thursday work week. Officers on the same shift will work opposite work weeks to allow Monday thru Friday coverage. Traffic officers may be posted for pre-determined shifts and schedules based on the specific needs of the community and the department (i.e. a traffic officer on the evening shift or night shift would be assigned to a group to help address OWI concerns). Traffic Officers would be allowed to flex their hours to allow for special projects or problem areas. Flexing of shifts will need prior approval from the
supervisor.

7.18.3 The traffic officer will count towards safety staffing.

7.18.4 The department may provide training for salvage inspection to the traffic officer who will be placed on a schedule that will allow for salvage inspection. While on inspection assignment, and with prior supervisory approval, the officer's hours can be flexed for the purposes of facilitating inspections that could not be done due to the requestor being unavailable during the officer's normal working hours. In the event the salvage inspection duties on any given day have been completed, the officer will resume other traffic unit duties as assigned or needed. Officers trained in salvage inspection will be allowed to continue working as a salvage inspector after completing traffic assignment. While performing scheduled salvage inspection duties, traffic officers will not count toward staffing numbers.

7.18.5 Police motorcycle operations certification is not required to be a traffic officer. If a traffic officer wishes to be motorcycle operation certified, the

traffic officer(s) will be given preference to attend the certification training. All other requirements of the motorcycle unit must be met.

7.18.6 This will not preclude other officers from being assigned to traffic duties. Traffic duties can be assigned to patrol officers as staffing allows.

7.18.7 This will be a 4-year assignment, with a possible extension of an additional 2-years. Upon completion of this assignment, the officer will return to the patrol division where the officer's seniority will take them. The officer may apply for an alternative position available by department wide posting during or at the completion of this assignment. If a current traffic officer signs for a traffic officer position via department wide posting for a different shift and accepts the position, this officer's time in the traffic officer position does not start over and will be a continuation of the time already served as a traffic officer. Once an officer accepts and is assigned to the position as a traffic officer, that officer will not be eligible for another traffic assignment until all other eligible officers have had an opportunity to accept and be assigned to the traffic officer position.

7.18.8 Excess Hours. Hours approved by a supervisor that are worked in excess of the scheduled workday shall be compensated in accordance with Article 6. An exception is when the approved work is performed at the initiative of and voluntarily by the officer to meet the needs of the officer's assignment. These hours are compensated at straight time off in compliance with FLSA limitations. No officer may alter a work schedule for the sole purpose of qualifying for posted overtime with the exception of Packer Games.

~~7.22 DETECTIVES: Detective requirements include:~~

~~a. Minimum of Advanced Police Officer with Green Bay or a combination of 3-years' experience as a Green Bay police officer and 3-years outside police officer experience.~~

~~b. The selection process will be in accordance with 7.2.3.i.(B).~~

~~7.23 MOUNTED PATROL UNIT (EQUESTRIAN) (MPU):~~

~~7.20.1 MPU requirements include:~~

~~a. 3-years' experience as Green Bay Police Officer.~~

~~b. The selection process will be in accordance with 7.2.3.i.(A).~~

~~c. Successfully pass basic horseback riding course established by the Police Department. The MPU is to be utilized for special events and patrols set up by the Department. Riders are expected to participate as assigned.~~

~~d. Members of the MPU shall generally train up to 8-hours per month during the~~

~~months the MPU is active. The responsible Supervisor for the MPU may~~

~~grant exceptions on a case-by-case basis to facilitate special training needs. The compensation for this training shall be actual hours at time for time via payback for those on their off time. All training plans and schedules must be approved by the responsible Supervisor for the MPU. Travel time will be in accordance with 29.2.1. Training for individual riders may vary based on the riders experience as determined by the Chief or designee.~~

~~e. MPU members may flex their workday to attend training in accordance with 7.21.~~

~~f. MPU demonstrations or requests for appearances shall be authorized by the Chief or designee and shall be compensated at straight time off in compliance with FLSA limitations. MPU demonstrations and requests shall be mutually agreed upon by both the MPU and Chief or designee. Mandatory demonstrations shall be paid at 1½-times.~~

~~g. When members of the MPU are used for patrol or mandatory assignments they will be allowed time immediately prior to and after their assignment for care and transportation of the horses.~~

7.24 ANIMAL CONTROL OFFICER

a. Qualifications for this position are:
   - Minimum of 3-years as a Green Bay police officer.
   - The selection process for Animal Control Officers will be in accordance with Section 7.4.

b. Core hours will be 7:30 AM to 4:00 PM on an administrative work schedule.

c. Animal Control Officers may flex their work hours with supervisory approval.

d. Animal Control Officers shall not be counted toward minimum safety staffing.

7.25 RANGEMASTER

a. Qualifications for this position are:
   - Minimum of 3-years as a Green Bay police officer.
   - The selection process for Range Master will be in accordance with Section 7.4.

b. Core hours will be 6:00 AM to 2:30 PM on an administrative work schedule.

c. The Rangemaster may flex his/her work hours with supervisory approval.

d. The Rangemaster may, with supervisory approval, be compensated time-for-time via payback for voluntarily performing Rangemaster duties outside of his/her regular work hours, not including annual Department in-service training.

e. Rangemaster must receive DAAT and Firearm certification within 6-months of appointment. If selected candidate does not have the necessary training at the time of appointment, DAAT and Firearm training will be paid by the Police Department.

7.26 MAINTENANCE OF 2-PERSON BUFFER:

7.21.1 For those teams where it is specifically referenced in Article 7, officers may flex their workday to attend training dependent upon the maintenance of a 2-person buffer above the current safety staffing numbers. Compensation for training will be actual hours at time for time via payback for those on their off time.

i. Officers may be cancelled from training outside of 24-hours prior to the start of their regular shift in order to maintain the 2-person buffer.

ii. If the training occurs during all or part of the officers' regular working hours, the officer may be pulled from training at any time to resume regular duties.

iii. If the training does not occur during any part of the officer's regular working hours, the officer may not be pulled from the training within 24-hours prior to the start of their regular affected shift.

iv. The Shift Commander has the discretion to allow attendance below the 2-person buffer on a case-by-case basis, dependent upon the work environment present at the time the training is to begin.

**ARTICLE 11 ~~SHIFT DIFFERENTIAL~~ ADDITIONAL PAY**

11.1 ~~ADDITIONAL PAY~~SHIFT DIFFERENTIAL. All employees not assigned to the day shift shall receive, in addition to their base pay, an amount equal to the number of hours designated below based upon the hourly rate of top patrol officer. The shift differential pay shall be on a monthly basis, but paid with the employee's bi-weekly pay. Shift differential pay shall be administered in the same manner as it was when expressed in dollar amounts.

| | | |
|---|---|---|
| Patrol Division | 10:30a to 7:00p shift<br>2:15p. to 10:45p shift<br>10:30p to 7:00a shift<br>7:00p to 3:30a shift | 1½ hours per month 3 hours per month 4 hours per month<br>4 hours per month |
| Detective Division | 2:30p to 11:00p shift | 3 hours per month |
| Drug Task Force | 11:30a to 8:00p shift | 3 hours per month |
| ~~Crime Prevention Specialist~~ | ~~12:00p to 8:30p shift~~ | ~~3 hours per month~~ |

11.2. DETECTIVE PREMIUM PAY. Members promoted to the rank of Detective pursuant to Article 30 shall receive an $80.00 per month premium, which shall become part of their base salary upon promotion.

11.3. LANGUAGE PREMIUM PAY. Members with sufficient skill in communicating in one or more languages other than English shall receive an annual premium payment of $500.00, to be paid with their uniform allowance. The Department shall determine the means of measuring language skill and the languages that will be eligible for compensation.

11.4 PHYSICAL FITNESS PREMIUM PAY. Members shall be eligible for an annual physical fitness incentive of up to $540.00 upon successful completion of a City designed physical fitness test (PFT). Scheduling of the PFT, make-up, and/or PFT re-test shall be determined by the Chief of Police or designee.

A. A member who successfully completes the PFT with a passing time shall receive the incentive payment.

B. If a member does not pass the PFT on their first attempt, they shall have the following options:

1. A member completing the course but not passing may receive $100.00 for completion of the course, or;

2. The member may request a re-test, in writing, within 30 calendar days to the Chief of Police or designee. The member shall be allowed to re-take the PFT at the next available make-up date. If the member passes the PFT on their second attempt they shall receive an incentive payment of $250.00 in that calendar year.

C. All payments are subject to appropriate tax withholding rules.

D. A member who is incapacitated during the PFT may test at an alternate time

established by the City. In the event a member has a medical restriction preventing participation in a particular portion of the PFT, the City shall establish an alternate testing procedure.

E. A PFT design committee consisting of 1-representative selected by the Association, 1-Command Officer, and 1-representative from City Human Resources shall assist the Chief of Police or designee in developing changes to the physical fitness test. Outside experts such as trainers, physical therapists, or other appropriate personnel may be engaged by the PFT design committee to provide advice and guidance in developing the test.

ARTICLE 12 CLOTHING ALLOWANCE

12.1 ~~Each employee of the Police Department shall have an account to be known as "Clothing Allowance." The Chief of the Police Department shall have discretion as to types of clothing to be purchased by employees of the Police Department. 10 Police Supervisory Personnel Contract 2020-2022~~

The Department will supply newly hired officers with their initial issue of all uniforms and equipment necessary to perform the duties of a police officer. Those items will remain department property. After this initial equipment issuance, maintenance and replacement of uniforms and equipment is the member's responsibility, with the exception of firearms or any other equipment covered elsewhere in this Agreement.

12.2 An additional "clothing allowance" will be provided annually at the beginning of the employee's next calendar year for the maintenance and replacement of uniform items. Officers may purchase additional items on their own and maintain possession of all items purchased after initial department issue.

12.2.1 In the case of personnel assigned to plain clothes assignments (Investigations, Administration) the ~~maximum~~ annual clothing allowance shall be $613.00. ~~effective January 1, 2013 for employees on the payroll on date of ratification.~~

12.2.2 In the case of personnel assigned to the Operations Division (uniform personnel) the ~~maximum~~ annual clothing allowance shall be $572.00. ~~effective January 1, 2013 for employees on the payroll on date of ratification~~

## ARTICLE 17
## HEALTH AND DENTAL INSURANCE

17.1 Employees will pay 15% and the City will pay 85% of the single or family premium for health care insurance benefits.

17.1.1 Employees may reduce their health insurance premium contribution up to a maximum of 2.5% per year by successfully participating in the Wellness Incentive Program as follows:

a. Employee's health care insurance premium will be reduced by 2.5% if the employee is carrying single coverage and participates in the Health Risk Assessment.

b. Employee's health care insurance premium will be reduced by 2.5% if the employee is carrying family coverage and both employee and spouse participate in the Health Risk Assessment.

c. Employee's health care insurance premium will be reduced by 1.25% if the employee is carrying family coverage and only the employee or the employee's spouse participates in the Health Risk Assessment.

17.2 Employees may participate in and pay health insurance premiums in accordance with the City's Health 1265 Program.

17.3 Employees will pay 12.5% and the City will pay 87.5% of the single or family premium for dental insurance benefits.

**Article 23 PERSONAL LEAVE DAYS**

23.1 BENEFIT. Regular full-time employees shall be eligible for ~~3~~4-days annually. Personal leave days must be used during the calendar year earned. They may not be accumulated. The employee shall provide at least 7-days notice for a day off except that such notice can be waived by mutual agreement of the employer and the employee. The number of personal leave days earned shall be prorated for new full-time employees in their initial calendar year of employment and for employees in their final calendar year of employment with the City unless the employee terminates employment by eligibility and acceptance to the State Retirement system, disability, or death.

**ARTICLE 30 ADVANCEMENTS & PROMOTIONS**

30.1 DEFINITIONS

30.1.2 Command Officer: A sworn department member holding the rank of Lieutenant, Captain, Commander, or Chief of Police

30.1.3 Supervisor: A sworn department member holding the rank of Sergeant or above.

30.2 ADVANCEMENT TO ADVANCED POLICE OFFICER POSITION.

30.2.2 Police officers shall be advanced to the position of advanced police officer upon completion of 6-years of service with the GBPD as a police officer.

30.2.3 Upon being appointed as an Advanced Police Officer, an officer shall thereafter, and until advancement to Specialist I, be considered as an Advanced Police Officer and receive compensation as outlined in the Wage Schedule.

~~30.2.4 Advanced Police Officers shall be given training in the field of evidence gathering and traffic management, and after completion of the same, shall act as evidence technicians and traffic specialist.~~

30.2.5 In order to diversify Advanced Officers amongst the various shifts, it is agreed that each shift shall maintain a minimum of 6-Advanced Officers. In case of a shift falling short of this minimum, the department shall assign Advanced Officers on the basis of inverse seniority.

30.2.6 For purposes of this section power shift shall be considered part of the afternoon shift.

30.3 ADVANCEMENT TO SPECIALIST I POSITION.

30.3.2 Officers shall be advanced to the position of Specialist I upon completion of 10-years effective as an officer with the Green Bay Police Department.

30.3.3 Upon being appointed as a Specialist I, an officer shall thereafter, and until advancement to Specialist II, be considered as a Specialist I and receive compensation as outlined in the Wage Schedule.

30.4 ADVANCEMENT TO SPECIALIST II POSITION.

30.4.2 Officers holding the position of Specialist I shall be advanced to the position of Specialist II upon the completion of 15-years with the Green Bay Police Department.

30.4.3 On appointment as a Specialist II, an officer shall thereafter be considered as a Specialist II and receive compensation as outlined in the Wage Schedule.

30.5 PROMOTION TO SERGEANT.

30.5.2 In order to be eligible for promotion to Sergeant, a member must have at least 6-years' experience as a Green Bay Police Officer, or at least 4-years'

experience as a Green Bay Police Officer and at least 2-years' experience as a full-time, sworn police officer in a comparably-sized or larger agency.

30.5.3 The selection process for promotions to Sergeant shall be as follows:

a A written examination, scored on a 100-point scale. A score of 70% is required to pass this examination and continue in the promotional process.

b An assessment center evaluation, developed with an external consultancy specializing in promotional processes. The Association shall be meaningfully involved in the selection of individuals serving on evaluation panels and the specific performance dimensions to be measured. The assessment center shall be scored on a 100-point scale. The candidate must receive a score of 70 percent or higher to continue in the process.

c A Peer review consisting of:

- Peer review forms will be sent to 12 individuals with whom the candidate currently works. Reviewers will be randomly selected. A GBPPA representative shall observe the reviewer selection process.
- Reviews will be in the form of a survey using a 5-point Likert scale to measure peers' opinions of specific skills and abilities related to the Sergeant position.
- The Peer Review shall be scored on a 100-point scale. The reviews with the highest and lowest scores for each candidate will be discarded, then the remaining scores shall be averaged to determine the final score.

d Each candidate's cumulative score shall be determined by weighting the assessment center score at 80 percent and the peer review score at 20 percent.

e Upon successful completion of the selection process, the candidate's seniority points shall be added to their cumulative score for the assessment center and peer review to reach a final score. Using the member's seniority date, the member shall receive one point for every 3-complete years of service.

f Candidates shall be ranked by their final overall score and placed on a ranked eligibility list. The eligibility list shall be good for two (2) years or until all eligible candidates have been promoted, whichever comes first. The City shall allow the Association to review the list prior to its posting.

g Candidates shall be selected for promotion into vacant Sergeant positions in order of their ranked position on the eligibility list. In the event of a tie the candidate with the highest seniority shall be offered the position.

h Notwithstanding subsection (g) above, a vacant Sergeant position

responsible for supervising Detectives shall be offered first to the highest-scoring Detective on the Sergeant promotional list.

- A sergeant so promoted to a Detective Sergeant position may not bid to fill a vacant Sergeant position outside Detectives until the eligibility list they were promoted from has expired or has been exhausted.
- If there are no Detectives on the Sergeant promotional list, the position shall be filled using the selection process in Article 7.4 to choose from among incumbent sergeants with at least one (1) year experience in the Sergeant rank.

i The Chief may skip a ~~A~~ candidate on the eligibility list ~~may be denied promotion~~ for sustained allegations of serious policy violations. The decision to skip a member on an eligibility list for promotion is subject to the grievance procedure outlined in Article 3, but such grievance does not include the right to grieve prior discipline.

30.6 SERGEANTS' DUTIES AND ASSIGNMENTS

30.6.2 ~~Notwithstanding any conflicting provisions of Article 39 – Unit Duties,~~. In addition to all duties of a patrol officer, Sergeants shall perform certain supervisory duties including, but not limited to:

a Conducting performance appraisals

b Participating in selection processes for specialty assignments and promotions to Sergeant or Detective

c Receiving complaints from community members and making recommendations regarding case handling

d After-action review of significant incidents such as pursuits, uses of force, and damage to city property

30.6.3 Effective January 1, 2023, sergeants selected to serve in specialty units shall perform supervisory functions, and the number of sergeants selected to serve in specialty units shall be limited to that necessary to provide adequate supervision to the unit. The parties recognize that it will take some amount of time to transition to Sergeants performing the role of team leader on the SWAT team.

30.6.4 Sergeants already serving on the SWAT and Dive Teams as of January 1, 2023 shall be allowed to continue in their current team role until such time as they leave the team. Any sergeant serving on both the SWAT and Dive Teams shall be required to choose one (1) team to continue serving on; no sergeant shall be authorized to serve on both the SWAT and Dive Teams from January 1, 2023 forward. The parties agree that it may be necessary to phase this change in to avoid negative impacts on staffing in specialty units.

30.6.5 Sergeants may serve in non-supervisory roles in the Honor Guard, Police Motorcycle Unit, and the Training Unit.

30.6.6 Sergeants shall only be assigned special projects and/or temporary assignments, pursuant to Article 5, when their assignment is to do supervisory work.

30.6.7 Sergeants shall be members of the Bargaining Unit.

30.6.8 A seniority roster for Sergeants shall be maintained. Shift assignment shall be based upon time in grade (i.e., seniority within the rank of Sergeant), as opposed to Bargaining Unit seniority.

a If a Sergeant accepts a position in a specialty team or assignment where the Sergeant loses his/her rank or accepts any other position at a higher rank (i.e., Lieutenant, Captain, Commander), the time in that position shall not be included in Sergeant seniority if the member returns to the Sergeant position at a later date.

30.6.9 Bargaining Unit seniority (the total time the member has served in the Bargaining Unit at all ranks) shall be used for all other purposes, including seniority points for promotions, overtime assignments, vacation selection, and specialty assignments.

30.6.10 Sergeants shall be eligible for overtime in accordance with Article 6.

30.6.11 A Sergeant assigned to perform substantially the duties of a higher rank shall be compensated at the rate of a Step 1 Police Lieutenant. A Sergeant performing higher-classification work for a minimum of 45 minutes shall receive one (1) hour of Step 1 Lieutenant pay, and time for time after one (1) hour of higher classification work.

30.7 PROMOTION TO DETECTIVE

30.7.2 Effective January 1, 2023, the position of Detective shall be a promoted position, subject to the provisions of Wisconsin Statute 62.13 (5). Members currently holding the position of Detective on January 1, 2023 shall be automatically promoted to the rank of Detective.

30.7.3 In order to be eligible for promotion after to Detective January 1, 2023, a member must have at least 6-years' experience as a Green Bay Police Officer, or at least 4-years' experience as a Green Bay Police Officer and at least 2-years' experience as a full-time, sworn police officer in a comparably sized or larger agency.

30.7.4 The selection process for promotions to Detective shall be as follows:

a A written examination, scored on a 100-point scale. A score of 70% is required to pass this examination and continue in the promotional process.

b A panel interview. The Association shall be meaningfully involved in the selection of individuals serving on interview panel and may review the questions to be asked, provided any Association representative reviewing the questions is not competing for the position. The interview shall be scored on a 100-point scale. The candidate must receive a score of 70 percent or higher to continue in the process.

c A Peer review consisting of:

- Peer review forms will be sent to 12 individuals with whom the candidate currently works. Reviewers will be randomly selected. A GBPPA representative shall observe the reviewer selection process.
- Reviews will be in the form of a survey using a 5-point Likert scale to measure peers' opinions of specific skills and abilities related to the Detective position.
- The Peer Review shall be scored on a 100-point scale. The reviews with the highest and lowest scores for each candidate will be discarded, then the remaining scores shall be averaged to determine the final score.

d Each candidate's cumulative score shall be determined by weighting the interview score at 80 percent and the peer review score at 20 percent.

e Upon successful completion of the selection process, the candidate's seniority points shall be added to their cumulative score for the interview and peer review to reach a final score. Using the member's seniority date, the member shall receive one point for every 3-complete years of service.

f Candidates shall be ranked by their final overall score and placed on a ranked eligibility list. The eligibility list shall be good for two (2) years or until all eligible candidates have been promoted, whichever comes first. The City shall allow the Association to review the list prior to its posting.

g Candidates shall be selected for promotion into vacant Detective positions in order of their ranked position on the eligibility list. In the event of a tie the candidate with the highest seniority shall be offered the position.

30.7.5 The Chief may skip a candidate on the eligibility list for sustained allegations of serious policy violations. The decision to skip a member on an eligibility list for promotion is subject to the grievance procedure outlined in Article 3, but such grievance does not include the right to grieve prior discipline.

30.8 DETECTIVES' DUTIES AND ASSIGNMENTS

30.8.2 A Detective assigned to an investigation shall have supervisory authority over sworn members at the rank of Officer and professional staff at the rank of Evidence Technician, Crime Analyst, and Criminalistic Specialist working on the investigation.

30.8.3 When a Detective position becomes vacant, the position on that shift shall be offered first to current Detectives by overall seniority. The resulting vacancy shall be filled according to the promotional process in Section 30.7.

30.9 PROMOTION TO LIEUTENANT.

30.9.2 Upon being promoted to the rank of Lieutenant the officer in question forfeits all Bargaining Unit seniority, except if the officer returns to the unit within 90-calendar days from the effective date of the promotion to Lieutenant the officer will maintain their original date of seniority in the police officer unit minus the number of days they were in the Lieutenant position. In the event that any Command Officer returns to the Bargaining Unit on either a voluntary or involuntarily basis to a rank or position within the Bargaining Unit, that officer returns as the least senior officer within the Bargaining Unit unless it is otherwise agreed in writing by the City and the Bargaining Unit.

30.9.3 Upon appointment to Lieutenant, the appointed officer shall thereafter perform only Command Officer duties in the manner and fashion described for Command Officer personnel in Section 1.2.

**Article 34 RESIDENCY**

34.1 Bona fide and continued residency within 35-miles of the jurisdictional border of the City of Green Bay shall be required for eligibility for the following positions or calls:

- K-9
- SWAT
- Eligibility for immediate need safety staffing shortage call-ins

"Immediate need" shall be defined as a demonstrable need at the time of the call. The burden shall be on the City to show such reasonable need. ~~The emergency nature of a detective call in shall be determined by the shift supervisor on a case-by-case basis taking into consideration factors such as the nature of the case, location and topography of the crime scene, number of witnesses, potential for contamination of the scene and other factors relevant to the exigency of securing the scene, preserving the scene or the costs of preserving the scene.~~

~~Officers living or owning property for residential purposes outside of the 35-mile jurisdictional border on or before July 1, 2003, shall not be subject to the call in eligibility limitation of this article stated above.~~

~~All other officers shall live in Brown County, contiguous counties or southern Door County (below the Sturgeon Bay Bridge).~~

Response time compensation for all officers living outside of the 35-mile jurisdictional border shall not exceed ½-hour.

**ARTICLE 39**
**UNIT DUTIES**

40.1 UNIT JOB DUTIES. Non-supervisory job duties shall be assigned only to members of the Bargaining Unit. Ranks excluded from the Bargaining Unit are so excluded because the primary nature of their positions is to supervise personnel of the department, and accordingly they shall not be assigned to perform non-supervisory duties as part of their normal and usual job duties; provided that this restriction shall in no way restrict such personnel in taking any and all police action, or performing police duties and functions in relation to situations, events or circumstances encountered or observed by such officers in the course of the performance of their supervisory duties (for example, a supervisor would not work radar or patrol for traffic violators, but would be expected to apprehend or arrest traffic violators who are observed by the supervisor while performing the duties of supervision of personnel). Sworn members of the Department who are not members of the bargaining unit may occasionally perform uniformed patrol duties, but in no event shall non-bargaining unit members be assigned to do Association work to avoid payment of overtime or to meet minimum staffing levels.

Formatted: Font: (Default) +Body (Calibri)

The City and GBPPA recognize that situations may occur where it is necessary that a supervisor become involved in an incident in a manner which may be considered outside of supervisory duties. The City, however, recognizes and agrees that the primary responsibility of a supervisor is to supervise officers in their work. The labor agreement provides for the situation where an obvious emergency need exists.

The parties also recognize the value to both the City and the Association of supervisory employees occasionally performing patrol duties in order to maintain familiarity with such duties and thus being able to more effectively supervise the work. Supervisors may be assigned to perform uniformed patrol duties for up to 24 hours per year, during which time they are permitted to perform the full range of patrol officer duties. A supervisor so assigned shall not be counted toward safety minimum staffing levels as described in Article 5. Supervisors shall not be used to replace or supplant sworn officers at any special event overtime or other overtime opportunities that are normally and customarily worked by sworn officers of the Department.

Formatted: Font: (Default) +Body (Calibri)

In addition to the emergency exception, the GBPPA agrees that it shall not grieve incidents of supervisors taking de minimus (minor, inconsequential, minimal) police action such as being approached by a citizen with a complaint (i.e. parking complaint, dispersal of loitering parties, etc.) which shall involve little time and keeps the supervisor in their primary duties of supervising the employee. However, if the incident becomes more involved than initially determined, then a unit shall be dispatched to the incident to take over the call. Situations must be weighed with efficiency and public service in mind, with constant re-evaluation of the situation in order to regain the functioning capacity of a supervisor.

- This restriction shall in no way restrict such personnel (supervisor) in taking any and all police action, or performing police duties and functions in relation to situations, events or circumstances encountered or observed by a supervisor in the course of the performance of their supervisory duties.

- A supervisor would not work an OWI from beginning to end, but would be expected to apprehend or arrest a traffic violator who is observed by the supervisor while performing the duty of supervising personnel.
- A supervisor would be expected to take de minimus police action related to a situation that arises in front of them and requires immediate police action and then turn this incident over to patrol units when/if further action is necessary (i.e. report is needed).
- The issues of unforeseen, emergent/emergency and or immediate need for police action allow for the supervisor to take action and once that initial action is taken to address these issues, patrol units, if not already on scene, shall be dispatched to take over the call and the supervisor shall return to their supervising capacity.
- The concepts of public service, efficiency, and unit duties are satisfied by: 1) the supervisor unit taking action in the unforeseen, emergent or need for immediate police action situations, 2) the patrol unit taking over the situation and performing the job functions of a patrol unit, and 3) the supervisor returning to their primary supervisory function.

Should a concern arise as to whether any action by a supervisor is not of a de minimus nature, or did not arise out of an emergent situation requiring immediate police action, the GBPPA agrees to first bring the concern to the attention of a ranking supervisor, Commander or above, as soon as possible after the concern arises. The City and the GBPPA agree to waive the contractual timelines regarding the filing of any grievance until the City and GBPPA have the opportunity to investigate and discuss the matter.

The Supervisory Unit shall perform Voice Stress Analyzer tests for internal affairs purposes, background checks, and other issues requiring a supervisory employee to perform such tests; Unit members shall perform all criminal investigation tests unless a supervisory employee is required or a qualified unit member is not available and a qualified supervisory employee is, and there is an immediate need to take the test for use in an interrogation then taking place.

40.2 COMMUNITY SERVICE ~~INTERNS~~ OFFICERS (CSO)~~(CSI)~~. The duties of the ~~CSI~~ CSO shall be assigned at the direction of the City. ~~CSI's~~CSOs shall also perform the following duties which by this agreement may encroach on the duties regularly and customarily performed by members of the GBPPA. ~~CSI's~~CSOs shall provide neighborhood based public service such as directing residents to proper resources, educating individuals and groups on various neighborhood problems and issues, quality of neighborhood and life issues, and provide other ~~community based~~community-based service support to the residents as directed by the City.

In addition, ~~CSI's~~CSOs shall provide support to the Department, assisting in some duties historically performed by GBPPA members. ~~CSI's~~CSOs shall work with sworn personnel in various divisions within the department under the general supervision of the ~~Department CSI~~division supervisor. ~~CSI's~~CSOs shall complete minor complaint reports similar to those taken over the phone by front desk ~~personnel, and~~personnel and perform follow-up work on reports generated from citizen on-line incident reports. ~~CSI's~~CSOs shall ~~provide assistance in areas such~~assist with tasks such as answering telephone calls, assisting ~~citizens~~ people who come to the station for assistance, filing paperwork, and other similar de minimis activities.

**Formatted: Font: (Default) +Body (Calibri)**
**Formatted: Font: (Default) +Body (Calibri)**
**Formatted: Font: (Default) +Body (Calibri)**
**Formatted: Font: (Default) +Body (Calibri)**
**Formatted: Font: (Default) +Body (Calibri)**
**Formatted: Font: (Default) +Body (Calibri)**
**Formatted: Font: (Default) +Body (Calibri)**
**Formatted: Font: (Default) +Body (Calibri)**
**Formatted: Font: (Default) +Body (Calibri)**
**Formatted: Font: (Default) +Body (Calibri)**
**Formatted: Font: (Default) +Body (Calibri)**

~~CSI'S~~ CSOs shall provide support to the patrol function in areas such as assisting with traffic control, (~~i.e.~~i.e., providing traffic direction, assisting disabled ~~vehicles~~motorists, traffic hazards), crossing guard duty, animal complaints, lost and found, and other similar de minimis activities.

As this ~~CSI~~ CSO support concept progresses, any changes that may infringe on work duties of the GBPPA shall be discussed. If the GBPPA ~~feels~~ believes any duties assigned to ~~CSI's~~ CSOs which encroach on ~~officers~~officers' duties do not fall within this agreement, the GBPPA and the City shall open discussions to resolve the matter. If the matter is unable to be resolved, the GBPPA retains the right~~s~~ to grieve the matter as defined in Article 3 of this Agreement. ~~CSI's~~CSOs shall not be used to replace or supplant sworn officers at any special event overtime or other overtime opportunities that are normally and customarily worked by sworn officers of the Department. CSOs shall not be counted toward safety minimum staffing levels as described in Article 5.

**Formatted: Font: (Default) +Body (Calibri)**

**Formatted: Font: (Default) +Body (Calibri)**

**Formatted: Font: (Default) +Body (Calibri)**

## ARTICLE 5 SHIFT ASSIGNMENTS

5.1 ASSIGNMENTS IN GENERAL. Assignments to shift positions shall be by seniority among those persons possessing the qualifications for the position to be filled. Assignments shall be made and persons with appropriate qualifications and seniority may bid for shift positions only when a vacancy exists in such position.

5.2 SHIFT TRADING. Officers shall be allowed, upon request, to have another officer substitute for the requesting officer on any given tour of duty under the following conditions:

5.2.1 The substitute member shall be of the same rank and be assigned to the same division as the requesting member.

5.2.2 The request shall be in writing and approved by the shift commander or Command Officer of both the requester and substitute, which said approval shall not be unreasonably withheld.

5.2.3 The consideration to the substituting officer, such as the requesting officer substituting for the substituting officer in the future, shall be strictly between said officers, without the City having any obligation whatsoever to be involved in enforcing any such agreement.

5.2.4 No trade may be made if the trade, when made, would result in an officer working more than 14¼-hours, in a combination of shift trade, training, duty hours and/or overtime, in any 24-hour period.

5.2.5 An officer who makes a partial trade with an officer on a contiguous shift with a 30- minute overlap shall remain on duty an additional 15-minutes at the end of that shift without any additional compensation.

5.3 TRAINING OF NEW PERSONNEL. The training of new officers shall be conducted pursuant to the departmental field training program under the provisions of this Agreement, excepting that while in training, the department shall have the right to assign shifts, groups, jobs, and duties as is necessary or proper under the training program, and all selection rights in regard to the same contained in this Agreement shall not apply to such officers; provided that in all instances the provisions regarding the length of the work day, the work week, provisions regarding pay, including overtime (except such officers may not bid, or be inversed, for normal overtime) shall apply.

5.4 TEMPORARY ASSIGNMENTS. The Chief of Police may, upon written notice to the Bargaining Unit, temporarily assign officers to special duties or projects for a period of up to 30-days; provided however that no officer may be temporarily assigned to any duties or projects which have historically been or normally are performed by or assigned to Bargaining Unit members as part of their job duties. If the assignment is voluntary, no premium pay shall be earned by the officer. An officer's performance of any temporary assignment shall not impact on promotion (excepting that such might increase the officer's personal knowledge or

experience) and shall not become part of the officer's personnel file or work record for promotional purposes.

5.5 TEMPORARY ASSIGNMENTS IN THE BEST INTEREST OF THE EMPLOYEE. The Chief of Police may, with Association approval, temporarily assign members to other duties or projects for a period of up to 15 consecutive working days so as to assist the member's overall wellness. Any member so assigned shall not be allowed to work overtime outside of his/her temporarily assigned duties. This provision may not be used as discipline, nor may such temporary assignment be considered in future discipline.

5.6 DAYLIGHT SAVINGS. When clocks are adjusted for "Daylight Savings Time" employees shall be compensated according to the clock rather than actual hours worked. Overtime shall commence after 8½ hours on a regular workday.

5.7 SPECIAL PROJECTS. The Chief of Police may authorize special projects not to exceed 60-days. The special projects shall be assigned based on qualifications amongst those interested. The selection process will be in accordance with Section 7.4, with the exception of the Peer Review process which shall not be included. The length of the special project may be extended upon mutual agreement with the Association for a period of up to 30-additional days. Approval for such extension shall not be unreasonably withheld. Members in the following positions shall not be eligible for special assignments:

| | | |
|---|---|---|
| Canine | Animal Control Officer | Neighborhood Response Team |
| Detective | Traffic Enforcement Officer | School Resource Officer |
| Drug Unit | Range Master | Community Policing Officer |
| | Behavioral Health Officer | |

Identical special projects shall not be posted more than two consecutive times except for good cause shown or by mutual agreement. Special projects may not be used to avoid filling vacancies in specialty units. Sergeants may only be assigned to special projects to perform supervisory duties.

5.8 SAFETY STAFFING.

5.8.1 Policy. Both the City and the Bargaining Unit keep officer safety as a foremost priority in all aspects of working conditions. It is recognized that the primary safeguard for officers is the police force itself, with each officer receiving protection through teamwork with, backup for or by, and general interdependency with other officers.

5.8.2 Staffing Requirements. In order to serve the above general policy, the following minimum officer safety staffing shall be maintained at all times, subject only to the provisions of 5.7.2.c below. The City may count up to two (2) Patrol Sergeant positions as patrol officers for purposes of safety staffing:

a. Safety staffing between the hours of 6:15a and 10:30a will be 11-patrol

officers, between the hours of 10:30a and 7:00p will be 13-patrol officers, from 7:00p until 3:30a this minimum shall increase to 16-patrol officers, however may be reduced to 14-patrol officers because of absences due to officers going home during shift due to illness. From 3:30a until 6:30a minimum staffing may be reduced to 10-patrol officers on duty.

b. The following provisions shall apply to the counting of patrol officers for minimum staffing requirements:

   i. Command Officers will only supplement safety staffing and do not count toward the safety staffing requirement.

   ii. There will be a minimum of two patrol sergeants working at all times.

   iii. Officers in plain clothes shall count toward the required number for staffing if officer is on patrol;

   iv. Two officers assigned to a patrol squad car shall count as two officers for required number for staffing;

   v. Probationary officers in training shall not count toward the required number for staffing;

   vi. School Resources Officers (SROs) shall not count toward the required number for staffing;

   vii. Community Police Officers (CPOs) shall not count toward the required number for staffing;

c. Unexpected deviations below safety staffing on any given shift within 3-hours of the end of that shift shall be filled by a call-in of the oncoming shift. This may occur when an officer or sergeant goes home sick. Should the time slot extend outside of 3-hours a full call- in must be done even if the department is running below staffing.

d. "Active patrol duty" shall mean a uniformed or plain clothed trained officer being assigned to perform a shift tour of duty the usual and customary duties of active police patrol within a district or other area of the city designated by the Chief of Police or designee.

e. Shift Commander Discretion. Due to the exigency and emergency nature of police work, deviation from staffing and assignment requirements within the work day are inevitable, and shift commanders shall have the discretion to direct the work force to meet unexpected situations, events or occurrences arising from time to time; provided that deviations shall not be allowed for expected situations or events, or those which reoccur on a regular basis so that they may be planned for.

f. In the event of a violation of the provisions of this Section, whether by the City failing to call in an officer or calling in the wrong officer, the

officer who should have been called in shall be compensated for the wages the officer would have earned had the officer been called in.

5.9 GROUP SELECTION. Assignments to groups shall be selected by departmental seniority as follows.

5.9.1 Current group assignments shall be continued, and no bumping shall be allowed.

5.9.2 When a vacancy in any group occurs on a shift, such shall be posted for selection by all officers qualifying to fill such a position, including officers already assigned to the shift.

5.9.3 Officers being newly assigned to a shift shall be assigned to a group having a vacancy after the posting under 5.8.2.

5.9.4 When an officer leaves a shift because of a move that entitles the officer to return to the shift at a later date, that officer shall be treated as a newly assigned officer to the shift under 5.8.3, unless agreed otherwise by the City and the Bargaining Unit before the officer leaves the shift.

5.9.5 New Shift/Group changes: An officer that moves shifts or work groups and is owed off time due to the shift/group move shall take any time off owed within the FLSA period. The officer shall be allowed to elect the off day(s) within the FLSA period (under the procedure identified in Article 14.3(c) of the Agreement), as long as the vacation book shows such day(s) as available. In the event the officer does not elect to do so, or his/her chosen off day is not available in the vacation book, the Department shall assign the day(s) off owed. No payback or compensatory time will be given unless the City is unable to schedule the off time owed within the FLSA period.

The formula for determining the off time owed to an officer for a shift/group move is as follows:

1. Prior to the shift/group move, use the officer's last full rotation 5 days on 3 days off. After the shift/group move again use one full rotation 5 days on 3 days off. Total the number of work days and the number of off days.
2. Total number of days worked in point #1 multiplied by .6 to determine the number of days off the officer should have had.
3. Compare the number of days off in point in point #1 to the number of days off in point #2. If point #2 is higher than point #1 this is the amount of time owed to the officer. If the officer is owed any time off, the office shall be scheduled the time off within the FLSA period.

The City will not seek compensation from the officer or add additional work days to the officer's schedule if, as a result of a shift/group move, the officer is off work more time than allotted during a normal rotation.

An officer that is scheduled off due to time owed from a shift/group move is unable to substitute any off time (i.e. personal or sick) for those scheduled off days.

5.10 ASSIGNMENT OF POSITIONS. Assignments to job or duty positions shall be made only when a vacancy exists, and there shall be no bumping

## ARTICLE 6
## OVERTIME

6.1 OVERTIME PAYABLE. Employees shall be compensated at the rate of 1½-times based upon their normal rate of pay for all hours worked in excess of the scheduled work day or work week. Overtime shall commence after 8½-hours on a regular workday or for hours worked outside the normally scheduled workweek. For purposes of calculating overtime, compensation for the hourly rate shall be based on a bi-weekly schedule of 75.6-hours and an annual schedule of 1964.5-hours. No change in the amount of overtime claimed by an employee shall be made unless the employee is notified of such proposed change within 7-days of the employee submitting the overtime.

6.2 OVERTIME/COMPENSATORY TIME. Compensatory time shall be limited to an accumulation of 100-hours.

6.3 ALLOCATION OF OVERTIME.

6.3.1 Posting. All overtime of the department schedule, where practicable, shall be posted. If more persons qualified for such overtime work sign for such than are needed, overtime shall be assigned on a seniority basis among those qualified for the work. (It is contemplated that at times it shall be necessary to determine the qualification of an employee to work overtime based upon the employee's knowledge of the subject of the overtime work or the training and expertise of the employee. However, in the event of a dispute as to the same, the City shall have the burden of establishing the necessity.) In assigning overtime the department shall ask for volunteers on the basis of seniority regardless of whether the officer is on a work or off day. In the event sufficient volunteers are not found, the balance of the overtime shall be assigned on the basis of inverse seniority among those on their workdays and then by inverse seniority among those on off days. Management may refuse overtime where there is a legitimate safety concern. Practicability of posting shall be determined in light of time available for posting and departmental or public security, or other relevant and sufficient factors. This paragraph shall not apply to overtime resulting from an extension of a person's normal workday duty, nor shall it apply to overtime not assigned by the City of Green Bay.

Special event overtime will be posted for a minimum of 30-days in advance of the event, unless the Department is not provided 30-days advance notice of the special event. The most senior qualified officer signing for and assigned the special event overtime will be expected to perform that overtime assignment unless the officer cancels 10-days prior to the special event. In the event the Department has less than 30-days advance notice to post the special event the posting will include a date to cancel. For purposes of these posting procedures a special event will typically be considered crowd control, traffic control, and general security at events, such as an athletic event, concert, ceremony, demonstration, exhibition, march, pageant, parade, procession, race, show, or other similar display which interferes with normal flow or regulation of traffic on the streets, sidewalks, or right-of-way, or the normal use of parks or other public or private grounds.

6.3.2 Qualification for Overtime. When determining qualifications, department shall abide by

the following:

a. When the overtime in question calls for the officer not to be in uniform, such overtime shall be performed by a detective. However, this provision shall not prevent the department from using patrol officers for ordinary plain clothes surveillance duty during their normal shift or using a patrol officer when the department is unable to secure sufficient detectives whether they are on or off duty. Use of patrol officers shall not reduce any shift below the number required for safety reasons. If the detective maintains a uniform, the detective shall be allowed to select overtime with the patrol division and specialists for crowd control events such as the 4th of July, Artstreet, and the like.

b. When the overtime in question calls for the officer to be in uniform, such overtime shall be performed by an officer within the patrol division who, in the normal course, performs their duties in uniform and is limited to the patrol division. This involves duties including and similar to road patrol, such as Speedwave, OWI saturation patrols, downtown security, and any other assignment where it is anticipated that the patrol vehicle shall be used the same as a road patrol vehicle, requiring knowledge and proficient use of the patrol vehicle and all equipment contained therein. Such overtime shall be filled via the road overtime call-in list and limited to officers in the patrol division.

c. Specialists shall be allocated overtime within their respective specialties, and in addition, if the specialist is, in the normal course, required to maintain a uniform, such specialist shall be allowed to select overtime with patrol division officers for crowd control events, such as 4th of July, Artstreet, and the like. Where it is anticipated such use of the patrol vehicle would not be needed, shall be filled by seniority from the full specialty call in list (mix of detectives, specialist positions and patrol officers). Examples of such overtime would be crowd control, traffic control and general security where the presence of a patrol vehicle is operationally desired, but full functional operation is not required.

d. Any overtime assignment where it is unclear what pool of officers should be utilized; such determination shall be made via mutual agreement between the City and an Association representative.

e. All overtime above shall begin at the station and the officers assigned shall report to the Shift Commander or briefing supervisor verifying their presence, at the end of the assignment the officer(s) must stop at the Shift Commander's office and verify they have completed their assignment. There is no change to the Packer Game Day reporting for duty and overtime procedures.

f. Absent a bona fide emergency, a sergeant in one Division shall not be

eligible for non-special event overtime work in another Division.

g. Sergeants in the Investigations Division shall not be eligible to work any Detective overtime involving nonsupervisory duties unless there are no Detectives available to perform the work.

h. Command Officers shall not be qualified to work any overtime involving nonsupervisory duties.

6.3.3 Overtime as Duty Assignment. An overtime assignment may be cancelled by the City at any time, provided that if it is cancelled within 24-hours of the scheduled start of the assignment, the officer shall be paid minimum call-in under sec. 6.4 below, or in the case of shift overtime, payment for the entire shift. The term "cancel" shall include cutting

short overtime which was planned to run for more than 3-hours.

6.3.4 Special Event Overtime. For special events (such as the 4th of July, and the like), because the City is at the mercy of the weather and the needs of the event sponsor, overtime may be cancelled or altered at any time prior to the scheduled commencement without relief; however, once the officer starts the assignment, if it was scheduled for more than three hours, there shall be a minimum three hours paid.

6.3.5 Overall hour limitation. Except as provided above, overtime shall not be allocated or assigned where it would result in an officer working more than 14¼-hours, in a combination of overtime, training, duty hours and/or shift trades in any 24-hour period. A new 24-hour period commences whenever there is a 7½-hour break in on duty time. An officer cannot be inversed into an assignment if it would result in the violation of this Article. The 14¼-hour limitation provided for in this paragraph shall be extended to allow for the duty of officers to extend their shifts upon the order of a Command Officer or when addressing emergencies that may occur at the end of a shift.

6.3.6 Inversed Overtime Assignment. Whenever an officer is inversed to work an overtime assignment, the officer inversed shall have the right to have another officer work the overtime on the same basis as the assigned officer, provided the replacement officer is from the pool of officers that were originally considered for the overtime assignment (in essence giving it away, the one that actually works it gets paid). In the event the City determines the need for the inversed overtime assignment has ended, the officer that is working the inversed overtime assignment may voluntarily cancel or cut short the overtime assignment with notice to the Command Officer. At the officer's choice inversed overtime assignments may be cancelled in accordance with provisions of this Article.

Improper Inverse. In the event an officer is improperly inversed under any of these procedures, the officer shall receive additional pay in the amount of straight time pay for each hour worked during the improper inverse assignment. In the event an officer is notified of a cancellation of the

improper inverse assignment within one hour of the notice of inverse assignment and the employee chooses to work the inverse assignment under section 6.3.6 the additional straight time pay shall not be applicable to such inversed overtime assignment. Examples of road overtime are attached as Appendix A.

6.3.7 Shift Overtime Postings and Subsequent Openings. The City shall post only for actual shift openings when posting for available shift overtime. Such postings shall be displayed for a minimum of 4-days. Any subsequent shift openings of the same overtime period(s) discovered while the positing is still active may be filled via this posting. Once such posting is taken down, any subsequent openings not involving a holdover must be filled via a telephone posting of all officers by seniority, even if the overtime period is the same as that of the previous posting.

a. Anticipatory Overtime: One exception to only posting for actual shift openings are for anticipated but not actual safety staffing shortages. The City may use "anticipatory postings" for anticipated safety staffing shortages. Such postings will be clearly marked anticipatory. This posting shall be filled or cancelled no later than 24 hours from the time of the assignment. Members who sign this posting may refuse to accept the assignment at the time the posting is taken down. If the anticipated posting does not have an adequate amount of members to fill the staffing shortage when taken down the shortage must be filled via a telephone posting of all officers by seniority.

6.4 MINIMUM CALL-IN TIME. Employees shall be compensated for a minimum of 3-hours for any call-in time worked on a scheduled work day, a day on which an officer works a full 8½-hour work day pursuant to posted shift overtime, or for a call-in while an officer is attending either a voluntary school, specialty team training or in-service training (an officer receiving call-in pay on a day attending school shall still be entitled to compensatory time as if no call-in occurred if the officer successfully completes the school in question, and if the school is not successfully completed, shall receive compensatory time for those hours in attendance). The department may engage police officers in police business on site during in-service training without paying call-in, provided such shall not jeopardize the officer receiving full credit for the class interrupted. Employees shall be compensated for a minimum of 6-hours for any call-in time on a day off or scheduled vacation. This call-in time shall be compensated at the base rate of pay.

6.4.1 Any officer who takes vacation or off-time coming, personal leave day or any other off- time authorized after being scheduled and notified of a required court appearance or other required non-shift departmental duties shall be compensated for a minimum of 3-hours.

6.4.2 Continuous Duty: In the event an officer is called in for more than one call

in any given day, including notice of court or any other notice of time outside the regular shift, that officer shall not receive two call ins, but shall be paid continuous pay at the overtime rate of time and one-half from the beginning of the first call in to the end of the second call in; excepting that if the call ins in question are for specialized units established and existing for the purpose of being called in for special problems or occurrences, such as SWAT, K-9, accident reconstruction, the continuous duty rule shall not apply to more than one call in of such nature, but rather each call in shall be a separate call in.

6.4.3 When a trade of shifts is made between officers as authorized in section 5.2 of this Agreement, and one of the officers is subject to a call as set forth in section 6.4 of this Agreement, the officer working the day shall be subject to the 3 hour call in compensation and the officer who is off because of the trade shall be subject to the 6- hour call in compensation. It is understood that the above shall not affect the application of 6.4.1 and 6.4.2 of this Agreement.

6.4.4 Officers inversed to work overtime to satisfy safety requirements shall be paid call-in time under this section. Officers who volunteer to work such overtime shall be paid at time and one-half for the overtime actually worked.

6.4.5 Officers shall be subject to the residency requirements as outlined in Article 35, Residency, of the Agreement, for immediate need safety staffing shortage call-ins and immediate need detective call-ins.

6.4.6 Response time compensation for call-ins shall apply as outlined in Article 35, Residency, of the Agreement.

6.5 IMMEDIATE NEED CALL-IN COMPENSATION. Immediate need call-in is defined as that need not previously known or posted, where the officer is needed immediately. (Example: Immediate road staffing shortage). This does not apply to court related hearings where the officer is being called in to testify such as municipal or circuit court appearances, probation/parole hearings or Chapter 51 hearings.

6.5.1 When an officer is called-in for immediate need overtime such overtime shall commence at the station upon duty-ready status of the officer. Such officers shall report to the on- duty Shift Commander duty ready, which shall be recorded as the official start time; additional 30-minutes of overtime shall be added to that start time regardless of when the officer arrives.

6.5.2 In the event the immediate need compensation requires the officer to respond directly to a scene, the start time shall be the time the officer arrives at the scene. Such officers shall report to the on-scene supervisor which shall be recorded as the official start time. An additional 30-minutes of overtime shall be added to that start time, regardless of when the officer

arrives.

6.5.3 If the overtime assigned is to fill immediate safety staffing needs the supervisor shall begin the call-in process immediately. There shall be no deliberate or unnecessary delay of filling such overtime. The officer accepting the overtime receives pay from the time of reporting duty ready to the Shift Commander plus 30-minutes. There is no compensation for the time between discovery of the shortage and the paid start time of the officer. The period of time the shift was short staffed up to the time of discovery is to be reported to the Operations Commander.

**EXAMPLE:** (Immediate action.) At 7:00p it is determined that an error was made in Telestaff, and shift is below safety staffing until 10:15p. Shift Commander immediately starts the call-in process. Officer A is called at 7:15p and accepts. Officer A arrives at 7:55p and reports to the Shift Commander duty-ready (in uniform and ready to walk out door). Officer A receives pay beginning at 7:25p (time of reporting + 30-minutes). No compensation for the time from 7:00p to 7:25p.

**EXAMPLE:** (Unnecessary delay.) At 7:00p it is determined that an error was made in Telestaff, and shift is below safety staffing until 10:15p. Shift Commander decides to wait to begin the call-in as there is no officer available to make the calls or s/he wishes to eat lunch first. An officer is available at 8:00p and call-in begins thereafter. This delay would be deemed unnecessary as the Shift Commander could have started the call-in him/herself. The time from 7:00p to 8:00p would be compensated under 5.7.2.f

**EXAMPLE:** (Shortage not discovered right away) At 10:00p it is discovered that there was a safety staffing shortage since 7:00p. The supervisor immediately begins a call-in process. Officer is called at 10:15p and accepts. Officer reports to Shift Commander at 11:00p duty ready (in uniform ready to begin). Officer receives pay beginning at 10:30p (time of reporting + 30-minutes). The time from 10:00p–10:30p is not compensated. The time from 7:00p to 10:00p shall be compensated via Article 5.7.2.f. In this situation, the supervisor notifies the Operations Commander of the details of the 7:00p–10:00p shortage. The Operations Commander shall facilitate the remedy with the GBPPA.

6.6 ORDERED IN VS. VOLUNTARY ACCEPTANCE. "Ordered In" is defined as a non-voluntary assignment. The officer is ordered to come in and has no choice. In this situation the officer is compensated from the time the officer was ordered in to report for duty. Minimum call-in time (3-hours/6-hours) applies to this situation.

6.7 COURT CANCELLATION PROCEDURE. The afternoon shift commander shall be notified of any court cancellations. It then becomes the responsibility of the officer to call the shift commander after 5:00p on the day prior to the scheduled court date as to whether or not the court appearance has been canceled.

6.7.1 The shift commander shall record all such calls by date and time in a log book; that is, if an officer appears at court and the case has been canceled, s/he shall receive the

minimum call-in pay only if s/he had called in after 5:00p the prior day and was not notified of the cancellation. If the officer had not called in the prior day, s/he shall not receive the pay.

6.7.2 On those occasions when court appearances are canceled after 5:00p, the shift commander shall attempt to contact the officer with the cancellation, if the officer had already called in. If the officer is contacted 12-hours before the scheduled court appearance, the officer shall not receive call-in pay.

6.7.3 Court shall include any time an officer is instructed by the Chief of Police or designee or subpoenaed to appear in any Court, legal proceedings (including depositions), or before any governmental body or other person, tribunal or agency authorized by law to issue subpoenas, which appearance is related to or arises out of the officer's scope of employment. (The City and Bargaining Unit have disagreed as to whether there was a past practice for compensating officers who are subpoenaed or instructed to appear at arbitrations or grievance proceedings dealing with the administration of this Agreement and the City had previously informed the Union of the discontinuance of this alleged past practice in a letter to the Union, dated August 27, 1986. The above language shall not apply to these situations.)

6.8 OVERTIME FOR GREEN BAY PACKER GAMES.

6.8.1 Two postings shall be placed on the bulletin board once each year by July 1. All officers interested in working Packer games or working any extra overtime beyond what would be normal for traffic or field assignments are requested to sign the respective postings. These postings shall contain the anticipated staffing needs for the games.

6.8.2 Officers who sign the above said posting shall be assigned to work each of the Packer games in the year in question on the basis of departmental seniority.

6.8.3 In the event there is an insufficient number of officers signing the posting to fill the remaining complement needed for the Packer games, officers shall be assigned in accordance with the Inverse Non-Road Overtime procedure in Appendix A.

6.8.4 In the event that any officer who has signed the above said posting to work the Packer games later decides not to work any given game, such officer shall have the right to remove their name from the posting for any game by giving at least 10 days advance notice of such removal before the game in question.

6.8.5 Officers working overtime for Packer games shall be compensated at twice their regular rate of pay for all hours worked.

6.8.6 Use of Day Shift for Staffing Holdover on Day of Packer Games. On Packer game days, a holdover of officers to complement staffing until Packer personnel return for road duty shall be filled by seniority from a combined pool of day shift officers working that day. Such overtime shall commence at the end of the officer's normal shift. If enough officers do not volunteer, openings shall be filled by inverse seniority from this same pool. Payment shall be at double time for time worked.

6.9 STAND-BY PAY. Officers asked to be available for immediate call to duty shall receive an hourly

rate of pay equal to 15% of the top patrol officers' hourly rate for every hour in which they are on stand-by. When actually called to duty, they shall be compensated according to Article 6 and/or Article 11 of this Agreement. If such standby duty is necessary in order to provide mutual assistance outside of the City limits, then the department shall select qualified officers for such duty by seniority from among those signing a posting.

6.10 ASSIGNMENTS OUT OF CITY. When an officer is assigned to perform duties out of the City which requires the officer to be out of the city overnight, in connection with their responsibilities as an officer for the Green Bay Police Department, the following shall apply. Compensation for training and/or schools shall be in accordance with Article 29.

6.10.1 The work assignment starts when the officer reports to the police department for duty assignment and ends when the officer returns to the police department. In the event an officer must travel on an off day, the City does not guarantee any number of hours. In the event an officer is required to work on a scheduled off day, the City retains the right to schedule travel time with sufficient time to reach the destination.

6.10.2 Transportation shall be provided as determined by the department.

6.10.3 If the officer is on a work day, the officer shall flex their normal work hours to accommodate travel time and work hours to the extent deemed appropriate by the department. The City may assign normal police duties on the day of travel, and require officers to work normal police duties until travel begins.

6.10.4 While on the out of city job assignment, an officer shall flex their normal work hours so as to accommodate the times that job duties are to be performed out of city (for example, if the officer works the night shift and the job assignment is to testify in court, the department shall have the option of directing the officer to start the work day at 6:00 a.m. the following day when the officer is to be in court).

6.10.5 An officer shall not be compensated in any fashion during the hours of

10:00p and 6:00a provided that the officer is not required to perform job duties during these hours. If an officer is required to perform job duties during these hours the officer shall be compensated only for the time spent performing those duties. All other hours during the out of city assignment shall be compensable as work hours, either as actual hours of work, or hours spent engaged to wait or waiting to be engaged for work.

6.10.6 Once notified of the court date, officers may not take off time on that date. See 6.4.1.

6.11 PAY BACK COMPENSATION. Until December 31, 2017 all accrued payback compensation shall be used by Employee prior to the last date of employment, or paid out at the time employee separates from employment. Effective January 1, 2018 payback time will not accrue in excess of 100-hours. Any hours in excess of the 100-hour maximum on January 1, 2018 will be paid out at employee's then current rate of pay. Payment will be made as soon as administratively practicable after January 1, 2018. Thereafter, earned hours in excess of the 100-hour maximum will be paid out as they are earned.

## ARTICLE 7
## SELECTION FOR SPECIALTY TEAMS AND ASSIGNMENTS

7.1 Regular assignments are those specialty assignments that are the officer's regular shift duties, and include:

7.1.1 Community Police Unit
7.1.2 Canine Unit
7.1.3 School Resource Officer Unit
7.1.4 Neighborhood Response Team
7.1.5 Drug Task Force
7.1.6 Traffic Unit
7.1.7 Professional Standards Division
7.1.9 Full-time positions in the Training Division (i.e., Range Master)

7.2 Detached assignments are those assignments that are separate from and supplementary to a member's regular assignment and include:

7.2.1 Special Weapons and Tactics (SWAT) Team
7.2.2 Dive Team/Dive Team Support
7.2.3 Peer Officer Support Team (POST)
7.2.4 Crisis Negotiation Team
7.2.5 Detached instructor positions in the Training Unit
7.2.6 Field Training Officer (FTO) Program
7.2.7 Marine Unit
7.2.8 Honor Guard
7.2.9 Police Motorcycle Operator/Instructor
7.2.10 Traffic Crash Reconstruction Team
7.2.11 Behavioral Health Officer
7.2.12 Animal Control Officer

7.3 Selection Process for Specialty Units

7.3.1 POSTING. Openings for specialty team positions will be announced either through posting or electronic communication to all officers. The announcement will include a description of the assignment; the closing date if any to apply for the assignment; requirements to be eligible for assignment; expiration date of the list; and description of the selection process.

7.3.2 MEMBER APPLICATION. The posting will indicate if the officer needs to provide written notice, prepare a letter of interest, provide a resume, or other means of applying for the assignment.

7.3.3 PROCESS FOR SELECTION. The selection process shall consist of the following:

a. At the time of the closing date of the posting, the candidate must meet posted requirements to be considered further for the assignment or specialty position.

b. Interview by a panel including at least one GBPPA member designated by the Association and one member from an outside police agency or community member with a relevant skill set. The interview shall be scored on a 100-point scale and the officer's score will equate to the number of points received by the interview panel. The candidate must receive a score of 70 percent or higher to continue in the process.

c. A Peer Review consisting of:

- Peer review forms will be sent to 10 members of the same rank with whom the candidate currently works. Peer reviewers will be randomly selected. In addition, peer review forms will be given to the member's direct supervisor and one other supervisor. A GBPPA representative shall observe the reviewer selection process.
- Reviews will be in the form of a survey using a 5-point Likert scale to measure peers' opinions of specific skills and abilities related to the specialty position.
- The Peer Review shall be scored on a 100-point scale. The reviews with the highest and lowest scores for each candidate will be discarded, then the remaining scores shall be averaged to determine the final score.

d. Each candidate's cumulative score shall be determined by weighting the interview score at 80 percent and the peer review score at 20 percent.

e. Upon successful completion of the selection process, the candidate's seniority points will be added to their cumulative score for the interview and peer review to reach a final score. Using the candidate's seniority date, the candidate shall receive one point for every 3-complete years of service.

f. Candidates will be ranked by their final overall score and the candidate with the most points will be offered the position. In the event of a tie the candidate with the highest seniority will be offered the position.

g. The Chief may skip a candidate on the eligibility list with sustained allegations of serious policy violations. The decision to skip a member on an eligibility list for a specialty assignment is subject to the grievance procedure outlined in Article 3, but such grievance does not include the right to grieve prior discipline.

h. If an insufficient number of eligible members apply for a specialty assignment, the Association and the City shall meet and confer as to how to proceed. In the event that the parties cannot reach agreement as to how to proceed, the City may withdraw the specialty assignment posting, or:

- The position shall first be re-posted, opening eligibility to any non-probationary member.
- After that, if there is still an insufficient number of applicants, the position shall be filled by inverse seniority among non-probationary members.

7.3.4 Should the City choose to establish an additional shift or fill a vacancy in any specialty unit, that shift or vacancy shall first be offered to members of that unit by overall seniority.

7.3.5 Should a member choose to leave a permanent specialty assignment, they may do so by requesting the same. If the officer decides to return to regular duty during the first 30-days in the specialty assignment, they shall return to their previous assignment and shift. After 30-days, if the member leaving the assignment is an Officer, they shall transfer to whatever opening exists in the Patrol Division until such time that openings arise on other shifts and the officer's department seniority allows movement to another shift. A sergeant in this situation shall transfer to whatever patrol sergeant position is available. A detective in this situation shall return to the Detective Division.

7.4 SCHOOL RESOURCE OFFICER. To be eligible for appointment to the School Resource Officer position, a member must have at least 3-years' experience as a Green Bay Police Officer. Selection shall be as described in Section 7.3.

7.4.1 School Resource Officers shall receive pay consistent with Schedule A of this Agreement.

7.4.2 The SRO shall work a 5/2 work schedule during the school year. Hours of work for this position shall be 7:00a-3:30p. Summer schedule is a 5-2/4-3 schedule. Each SRO shall accumulate 1-work day every other week while school is in session and bank that day for off time during the summer months. Accumulated banked days cannot be carried over to the next school year.

7.5 <u>CANINE UNIT.</u> To provide maximum availability for normal canine handling duties, newly appointed Canine Unit officers shall not serve on more than one other specialty unit at the same time.

7.5.1 Qualifications for this position are:

a. Minimum of 3-years as a Green Bay police officer.

b. The selection process for Canine Officers will be in accordance with Section

7.3.

c. Prior to the selection process as described in section 7.3, candidates will be required to pass a physical agility test reasonably designed to measure their ability to perform the Canine Officer role. This test shall be administered on a pass/fail basis; a member must pass the test to continue in the selection process.

d. Notwithstanding Article 7.3.4, the commitment by the officer to remain in the program shall be 5-years. The commitment requirement is met by the employee spending 3-years in the program. Any officer who enters the program and becomes eligible for promotion during the first 3-years of the program must waive their opportunity for any promotion until the full 3-year commitment to the program is completed unless the parties mutually agree otherwise.

e. For Canine Officers appointed after July 1, 2016 the length of assignment will be 10 years or the work life of 2 of the officer's dogs, whichever is greater. The Canine Officer may be considered for additional Canine Officer assignments by applying for the position.

7.5.2 The Canine Unit shall work 5-days on, followed by 3-days off on a rotating schedule. The Canine Unit shall work 8½-hours per day in the same manner as shift personnel.

7.5.3 The Canine Officer shall be responsible for 17-hours of maintenance training per month on a yearly average. Canine officers shall be paid at straight time pay for up to 171-hours in the 28-day cycle, if the training pushes the officer over the 171-hours they would receive 1½ pay for those hours (this provision is to address training only and is not a waiver of other contractual overtime i.e., time in excess of 8½ hours in a day). Additional training shall be available with supervisory approval.

a. When feasible all canine officers will train together as a unit.

b. Training will be twice per month.

c. Training will be allowed regardless of staffing or call volume, except in emergency situations as determined by the Chief of Police or designee.

7.5.4 The Canine Unit shall submit to recertification training as scheduled by the Department. A Canine Patrol Officer shall adjust their workweek for training purposes and be compensated at the straight time rate for all time spent in recertification training. When the Department adjusts the workweek, an officer's adjusted off day(s) will be placed either immediately before or immediately after the officer's regular off days in the week following recertification training.

7.5.5 Canine demonstrations shall be authorized by the Operations Commander and shall be compensated by compensatory time at straight time on an hour-for-hour basis. Canine demonstrations shall be mutually agreed upon by

both the Canine Patrol Officer and the Operations Commander. Mandatory demonstrations shall be paid at 1½-times.

7.5.6 Vacation and other off time shall be administered on an hour for hour basis in the same manner as shift personnel.

7.5.7 Canine Patrol Officers shall be paid for the same number of hours for holidays as if they were a regular shift employee.

7.5.8 The Canine Patrol Officer shall be allowed to use the Canine vehicle for personal use within the city limits if the Canine partner is along in the car with the officer.

7.5.9 When there is not a GBPD Canine working in accordance with Section 7.3, a GBPD Canine shall be called in by seniority; except that an on-duty Canine Unit from another police agency shall be called in if it is available for immediate response and the time of response is in good faith considered to be as fast as that of an off-duty GBPD Canine Unit.

7.5.10 As long as the option outlined in 7.3.10 exists, the City shall be responsible for routine medical costs, but not treatment for illness or injury (except on-duty injuries).

7.5.11 The Canine Patrol Officer shall be subject to the residency requirements as outlined in Article 34, Residency, of the Agreement.

7.5.12 The Canine Patrol Officer shall be paid $195 per pay period for all care and maintenance of the canine. If the Canine Patrol Officer must take the canine to the vet for care, the officer shall receive payback time at the straight time rate for time spent at the veterinary office.

7.5.13 Existing Canine Officers will not be subject to fitness/agility testing identified in 7.5.1(c).

7.6 <u>SWAT TEAM</u>

7.6.1 Team requirements include:

a. Minimum of 3-years as a police officer.

b. Attend SWAT training as required.

c. Be willing to respond to SWAT call-ups and serve in whatever capacity as required by the OIC on the scene.

d. The selection process will be in accordance with Section 7.3.

e. Prior to the selection process as described in Section 7.3, candidates will be required to pass a physical agility test reasonably designed to measure their ability to perform the SWAT role, and a firearms qualification test. These tests shall be administered on a pass/fail basis; a member must pass each test to continue in the selection process.

f. The SWAT Team may train up to 17-hours per calendar month. Upon management approval, the SWAT Team may conduct one (1) 40-hour in-

service training per year in addition to the monthly training, for which SWAT Team members shall adjust their work week.

g. Training hours may not be carried over outside the calendar month except the SWAT Commander may grant exceptions on a case-by-case basis to facilitate special training needs. The compensation for this training shall be actual hours at time for time via payback for those on their off time. All training plans and schedules must be approved by SWAT supervisory personnel. SWAT Team officers may flex their workday to attend training in accordance with Appendix D.

h. Nothing in this section prevents SWAT members, with supervisory authorization, from attending additional training related to specialties within SWAT.

i. All SWAT Team members may earn up to 3-hours of time for time payback per month for physical conditioning time. The tracking of these hours shall be monitored between the SWAT Team members and SWAT Command staff.

j. The City shall provide SWAT members with certain basic clothing and safety equipment as needed. (Examples include but are not limited to: kneepads, safety glasses/goggles, basic duty uniform, holster, protective gloves.) The initial costs as well as replacement costs of such equipment shall be based on average costs determined by the SWAT Command staff.

**EXAMPLES:**

i. Night shift officer is scheduled to attend training January 4, 8:00a–4:30p. This takes the place of the officer's shift of January 3. At 9:00p on January 2, (outside 24-hours prior to the affected shift) it is determined the officer's absence would cause the shift of the 3rd to drop below the 2-person buffer. The officer is to be notified they cannot attend the training, and be placed back on the officer's regular shift.

ii. Day shift officer is scheduled to attend training January 4, 8:00a-4:30p. The officer flexes to these hours. It is determined at 6:00a that day that the 2- person buffer is not met. Upon arrival for training the officer could be required to resume normal patrol duties for the remainder of the shift.

iii. Afternoon shift officer is scheduled to attend training January 4, 5:00a-1:30p. This takes the place of the officer's shift of January 4, 2:15p-10:45p. On January 3 at 9:00p, it is determined the 2-person buffer shall not be met due to a sick call-in and injury. This occurred inside the 24-hours, and thus the officer would still be allowed to attend the training and any shift OT would be filled.

iv. The Shift Commander may grant exceptions on a case-by-case basis dependent on the needs of the road. It is the officer's responsibility to adhere to the 14¼ hour maximum hours.

7.6.2 SWAT team members will follow all procedures and guidelines set forth in the SWAT Policy of the Green Bay Police Department. Applicants should review the policy prior to applying.

7.6.3 Members shall be subject to the residency requirements as outlined in Article 34, Residency, of the Agreement.

7.7 CRISIS NEGOTIATION TEAM. The department shall maintain up to 6-officers trained as Crisis Negotiators.

7.7.1 Crisis Negotiator requirements include:

a. Minimum of 3-years as a Green Bay police officer.

b. The selection process will be in accordance with Section 7.3.

c. Officers currently holding the position of negotiator shall retain their status as long as desired, subject to removal for cause.

d. Crisis Negotiators shall train up to 4-hours per month. The CNT Supervisor may grant exceptions on a case-by-case basis to facilitate special training needs. The compensation for this training shall be actual hours at time for time via payback for those on their off time. All training plans and schedules must be approved in advance by CNT supervisory personnel.

e. Crisis Negotiators may flex their workday to attend training in accordance with Appendix D.

f. Negotiators shall be trained in Command Post Bus and CAD operation.

g. Crisis Negotiators shall be provided with clothing identifying them as a Negotiator for use during official call-outs.

h. Management reserves the right to determine how many Crisis Negotiators are required in the event of a call-in. Call-ins shall be compensated per Article 6 of this Agreement.

i. Crisis Negotiators shall be subject to the residency requirement as outlined in Article 34 of this Agreement.

7.8 FTO PROGRAM. Officers performing the duties of a field training officer shall be compensated at a rate of $1.25 per hour for time actually spent training officers under the program. Management maintains its right to make FTO assignments from the existing pool of qualified FTOs. The officers so chosen shall serve as FTOs upon assignment until the Chief of Police or designee and the officer mutually agree to the officer's removal.

7.8.1 FTO requirements include:

a. Minimum of 3-years as a Green Bay police officer.

b. The selection process will be in accordance with 7.3.

7.8.2 FTOs may flex the hours in their workday to attend meetings, training, or conduct training.

7.8.3 FTOs attending meetings, training, or conducting training on their off day, or outside their regular hours, shall be compensated at time for time payback.

7.8.4 The expectation of the FTO is to complete all Daily Observation Reports (DOR) by the end of the work shift that is being evaluated, or prior to the start of the next work shift. With prior approval from a Field Training Supervisor (FTS) an FTO may finish the DOR at the end of the work shift being evaluated, or prior to the next work shift. Such time will be compensated at time for time payback.

7.8.5 Supervisory approval will be required prior to any FTO flexing their hours or performing work outside their regular duty hours.

7.9 COMMUNITY POLICING UNIT (CPU).

7.9.1 CPU requirements include:

a. Minimum of 3-years as a Green Bay police officer.

b. The selection process will be in accordance with Section 7.3

7.9.2 Job Duties. CPU Officers shall be assigned geographical boundaries with the basic mission to interact with the neighborhood and community with the officers using their own initiative in solving problems and meeting neighborhood and community needs. Specific job duties shall be determined and set by the department from time to time.

7.9.3 Shift Assignments. CPU Officers appointed after June 22, 2016, shall be assigned to the midday shift in the patrol division. Core hours for all newly appointed CPs will change from afternoon (2:15p-10:45p) to midday (10:30a-7p), but all current CPs shall retain their current core hours and corresponding shift differential.

7.9.4 Shift Schedule Deviations. With supervisory approval CPU Officers may voluntarily deviate from the afternoon shift schedule to accommodate the neighborhood/ community needs as long as hours consistent with the 5/3 schedule are maintained.

7.9.5 Excess Hours. Hours approved by a supervisor that are worked in excess of the scheduled workday shall be compensated in accordance with Article 6. An exception is when the approved work is performed at the initiative of and voluntarily by the officer to meet the needs of the officer's neighborhood community. These hours are compensated at straight time off in compliance with FLSA limitations. No officer may alter a work schedule for the sole purpose of qualifying for posted overtime with the exception of Packer Games.

7.9.6 Vacation. CPU Officers shall select vacation separate from the afternoon shift

of the Operations Division, however may not schedule the same time period as their geographical partner without approval of the supervisor.

7.9.7 Other Assignments. Except in cases of emergency, CPU Officers shall not be reassigned, or voluntarily work to fill minimum staffing, CPU Officers will not be assigned to or voluntarily work posted special events outside of their community policing zone.

7.10 NEIGHBORHOOD RESPONSE TEAM (NRT): The Neighborhood response team shall be comprised of officers from the operations division (number determined by the chief of police) who shall perform similar duties as a Community Police Officer but shall not be assigned to a particular neighborhood. The NRT shall be used, in whole or part, in conjunction with investigations, patrol and community police to focus directed patrol strategies to include but not limited to gun violence, violent crime, and social disorder. Requirements of NRT Officer include:

a. Minimum of 3-years as a Green Bay Police Officer

b. The Selection process will be in accordance with Section 7.3.

c. NRT Officers will not count towards safety staffing levels.

d. Core hours will be 4:00 PM to 12:30 AM on a 5/3 work schedule

e. NRT officers may flex their workday up to and including afternoon shift or evening shift only.

f. Vacation. Up to 50% NRT Officers shall be allowed off for vacation or other time off unless approval is obtained from the supervisor. In the event there are an odd number of NRT officers, the eligibility for vacation will be rounded up.

g. Excess Hours. Hours approved by a supervisor that are worked in excess of the scheduled workday shall be compensated in accordance with Article 6. An exception is when the approved work is performed at the initiative of and voluntarily by the officer to meet the needs of the officer's duties. These hours are compensated at straight time off in compliance with FLSA limitations. No officer may alter a work schedule for the sole purpose of qualifying for posted overtime with the exception of Packer Games.

h. Shift differential: NRT will receive shift differential of four hours a month per Article 11.1

i. Other Assignments. Except in cases of emergency, NRT Officers shall not be reassigned, or voluntarily work to fill minimum staffing or special events.

7.11 DIVE TEAM:

7.11.1 Dive Team requirements include:

a. Minimum of 3-years as a Green Bay police officer.

b. The selection process will be in accordance with Section 7.3.

c. Prior to the selection process as described in section 7.3, candidates will be required to pass a physical agility test reasonably designed to measure their ability to perform the Dive Team role. This test shall be administered on a pass/fail basis; a member must pass the test to continue in the selection process.

d. The training of the dive team shall be up to 12-training sessions per year. Training shall be preapproved by the dive team supervisor. The number of training sessions may be increased with the approval of the Chief of Police. It's contemplated that training sessions shall include all members of the dive team for training. Training that can be conducted by dive team members may be done in smaller groups. Dive team members may not attend training as a part of their work day if the attendance creates overtime on their shift.

e. Members may flex their work day or receive payback compensation for attending or conducting dive related meetings and/or training on their work day. Members attending or conducting dive related meetings, equipment maintenance and/or training on their off time shall be compensated at time for time payback. Supervisor approval shall be required prior to any member flexing their hours or performing duties on their off time. Flexing shall be consistent with Appendix D.

f. Members must be willing to respond to Dive Team call-ups pursuant to the procedures for allocation of overtime assignments under Article 6, and perform the duties as required by the OIC in charge (i.e. drivers, line tenders or other duties) excluding assignment as boat driver.

g. Members must attend SCUBA certification training and any other training deemed necessary by the Dive Team Commander.

h. Members must follow all procedures and guidelines set forth in the Dive Team Policy of the Green Bay Police Department. Applicants should review the policy prior to signing up.

i. Dive Team Members shall be subject to the residency requirements as outlined in Article 35, Residency, of the Agreement.

j. All Dive Team members may earn up to 3-hours of time for time payback per month for physical conditioning time. The tracking of these hours

shall be monitored between the Dive Team members and the supervisor.

7.11.2 Dive Support officers will be responsible for providing support for the Dive Team in the area of equipment maintenance and operation, diver line tending, general assistance to the divers, and other duties as needed. Dive Team Support Officer requirements include:

a. Minimum of 3-years as a Green Bay police officer.

b. The selection process will be in accordance with 7.3.

c. The department will maintain up to 6-Dive Support officers.

d. Management reserves the right to determine how many Dive Support officers are required in the event of a call-in. Call-ins will be compensated per Article 6.

e. Dive Support officers will train in conjunction with the Dive Team personnel under the Dive Team Training guidelines. The Dive Commander may grant exceptions on a case-by-case basis to facilitate special training needs. Dive Support officers may flex their workday to attend training in accordance with Appendix D.

f. Officers engaging in other Dive Support duties on their off time will be compensated at time for time payback. Supervisory approval will be required prior to any member flexing their hours or performing duties on their off time.

g. When an opening for a position of Diver becomes available, the position will first be offered to Dive Support officers by seniority, prior to a general department posting.

7.11.3 Members of the Dive Team may be removed by written request of the team leader and a majority of the Dive Team members.

7.12 MARINE UNIT: When trained, officers assigned to the unit shall be deemed qualified to receive assignment to patrol the Fox River within the City of Green Bay and operate the Dive Team Boat under the procedures for allocation of overtime assignments contained in Article 6. The Marine Unit or Dive Team is at the mercy of the weather; therefore, the assignment may be cancelled at any time prior to the scheduled starting time without relief. Once the assignment starts and, in the case of the Marine Unit if it was scheduled for 3-hours or more, there shall be a minimum of 3-hours paid. The decision to cancel a Marine Unit assignment shall be made by a Marine Unit supervisor or the Shift Commander.

7.12.1 The department will create a Marine Unit, whose duty will be operation of the department watercrafts for purposes of harbor patrol and boat operation, including all related equipment, both for general harbor patrol duties, and watercraft operation in support for the department Dive Team. Marine Unit requirements include:

a. Minimum of 3-years as a Green Bay police officer.

b. The selection process will be in accordance with Section 7.3.

c. Prior to the selection process as described in section 7.3, candidates will be required to pass a physical agility test reasonably designed to measure their ability to perform the Marine Unit role. This test shall be administered on a pass/fail basis; a member must pass the test to continue in the selection process.

d. The department will maintain a minimum of 10-officers in the Marine Unit.

e. Management reserves the right to determine how many Marine Unit officers are required in the event of a call-in. Call-ins, as well as posted harbor patrol details will be compensated per Article 6.

f. Marine Unit officers will receive training in general watercraft operation, care, operation and maintenance of related equipment, navigation training, related waterway laws, and skills required for operation around divers.

g. Marine Unit officers will train up to 8-hours per month. The Marine Unit Commander may grant exceptions on a case-by-case basis to facilitate special training needs. Officers will train on a rotating basis with the Dive Team as scheduled by the Dive Team supervisory personnel. When not assigned to Dive Team training that month, the remaining Marine Unit officers will train separate from the Dive Team. Compensation for training will be actual hours at time for time via payback for those on their off time.

h. Marine Unit officers may not attend training or perform equipment maintenance as part of their workday if the attendance creates overtime on their shift. Marine Unit officers may flex their workday to attend training in accordance with Appendix D.

i. Officers engaging in other non-call-in Marine Unit duties on their regular off time will be compensated at time for time payback. Supervisory approval will be required prior to any member flexing their hours or performing duties on their off time.

7.13 <u>COMMUNITY CRISIS INTERVENTION TEAM (CCIT):</u>

7.13.1 CCIT requirements include:

a. Minimum of 3-years as a Green Bay police officer.

b. The selection process will be in accordance with Section 7.3.

7.13.2 The purpose of the CCIT is to:

a. Establish a task force of officers to become the CCIT experts for the department.

b. Track CCIT related calls for service to assist with analyzing mental health issues and calls for services to allow for the adoption of a

problem-solving approach to mental health issues.

c. Enhance community awareness and safety through information sharing.

d. Increase officer safety through training and effective information sharing.

e. Enhance community safety and reduce department workload by connecting consumers with services to help solve underlying problems thus trying to reduce chronic repeated calls with the same individual.

7.13.3 Composition/Method of Selection: The Department will attempt to assign officers from the following shifts:

| | | |
|---|---|---|
| 3-Day Shift | 2-Midday Shift | 3-Afternoon Shift |
| 2-Evening Shift | 3-Night Shift | 3-Community Police |
| 3-School Resource | 2-Detective | |

The number of members assigned per shift shall be maintained. If a vacancy occurs because of a member leaving the shift or the team, then the position shall be posted for that shift. Those officers currently possessing the initial 40-hour introductory training through National Association on Mental Illness at the time the initial team posting comes down, shall become voluntary members of the team if they choose (aka: grandfathered) and be eligible for all provisions of 7.13. Should an officer choose to move to another shift or position, the officer shall be allowed to participate, but shall not be eligible for training and compensation provisions of 7.13. Any such officer may post back into full team status via future postings.

7.13.4 Training Opportunities: Members selected to the CCIT shall receive CCIT and mental health related training. Members shall then select a CCIT specialty (two to three members per specialty), such as Post Traumatic Stress Disorder (PTSD), Schizophrenia, Alzheimer's and Elder care issues, etc. for focused training. The number of members in a specialty area and the selection of a specialty shall be made between the members of the CCIT and their supervisor with the supervisor having the final decision. The member shall then voluntarily attend any professional meetings and/or training within the employee's specialty. Specialized and non-specialized training opportunities and meetings shall be rotated among the members of the CCIT.

7.13.5 Compensation: Members attending CCIT related meetings and/or training shall be allowed to flex their hours in their work day. Members attending CCIT related meetings and/or training on their off day shall be compensated at time for time rate via payback. Members shall be allowed to voluntarily perform CCIT duties on their off time and shall be compensated at time for time rate via payback. Members who present or conduct training outside of their normal work hours shall be compensated at time for time via payback. Members shall be compensated for travel time and such travel time shall be included in the total sum of time beginning when members leave the GBPD

and end when they return to the department. Supervisory approval shall be required prior to any member flexing their hours or performing duties on their off time. Under no circumstances shall an officer receive contractual overtime based on their membership in the CCIT. All compensation must be in compliance with the Fair Labor Standards Act.

7.13.6 Duties: The following duties shall be in addition to the duties of the officer in their current capacity:

a. Conduct follow-up investigations and analysis of CCIT related activity.

b. Present to community groups about CCIT, mental health issues and the department response.

c. Participate in and represent the GBPD at professional law enforcement organization meetings regarding CCIT and mental health issues.

d. Participate in and represent the GBPD at mental health organization meetings regarding CCIT and mental health issues.

7.13.7 In the event the Department implements mandatory CCIT training for all sworn members, Section 7.13 shall become moot. In this event, the Department shall establish a CCIT Coordinator position in the Behavioral Health Unit to coordinate CCIT training for all members.

7.14 BEHAVIORAL HEALTH UNIT (BHU): BHU requirements are:

7.14.1 Minimum of 3-years as a Green Bay police officer.

7.14.2 The selection process will be in accordance with Section 7.3.

7.14.3 Officers selected for the BHU position will attend and complete the 40-hour CIT Certification Course.

7.14.4 Officers will be assigned to an administrative schedule, (5-2, 4-3); the primary hours will be 10:30 am-7:00 pm.

7.14.5 Except in cases of emergency, BHU Officers shall not be reassigned, or voluntarily work to fill minimum staffing.

7.14.6 With supervisory approval BHU Officers may voluntarily deviate from their shift schedule to attend meetings, appointments, etc. as long as hours consistent with the Administrative schedule are maintained.

7.14.7 BHU Officers shall select vacation separate from the Mid-Day shift of the Operations Division.

7.14.8 Hours approved by a supervisor that are worked in excess of the scheduled workday shall be compensated in accordance with Article 6. An exception is when the approved work is performed at the initiative of and voluntarily by the officer to meet the needs of the officer's assignment in the BHU. These hours are compensated at straight time off in compliance with FLSA limitations. No officer may alter a work schedule for the sole purpose of

qualifying for posted overtime with the exception of Packer Games. (CPTE)

7.14.9 This will be a 3-year assignment, with a possible extension of an additional 1-year. Upon completion of this assignment, the officer will return to the division where the officer left and slot in where the officer's seniority will take them. The officer may apply for an alternative position available by department wide posting during or at the completion of this assignment. An Officer may reapply but the list of candidates must be exhausted prior to receiving an additional assignment.

7.15 PEER OFFICER SUPPORT TEAM (POST):

7.15.1 The purpose and requirements of POST are:

a. Establish a team of officers to become skilled in facilitating critical incident stress related debriefings, defusing, managing, supporting and educating officers involved in critical incidents.

b. Provide individual, voluntary and confidential coaching for officers in trauma recognition and resolution, job stress management strategies, and professional growth and development.

c. Minimum of 3-years as a Green Bay police officer.

d. The selection process will be in accordance with Section 7.3.

7.15.2 Composition/Method of Selection: The Department will make reasonable efforts to evenly distribute POST assignments to each shift and assignment.

7.15.3 Training Opportunities: Members selected to the POST will receive training related to the team's functions. Members will then select a POST specialty such as Debriefing, Defusing, Grief and Loss, Crisis Management Briefing, Critical Incident Adjustment Support or Pre-Crisis Education. The number of members in a specialty area and the selection of a specialty will be made between the members of the POST and their supervisor with the supervisor having the final decision. The member will then voluntarily attend any professional meetings and/or training within their specialty. Specialized and non- specialized training opportunities and meetings shall be rotated among the members of the POST.

7.15.4 Compensation: Members attending POST related meetings and/or training shall be allowed to flex their hours in their workday. Members attending POST related meetings and/or training on their off day shall be compensated at time for time rate via payback. Members will be allowed to voluntarily perform POST duties on their off time and will be compensated at time for time rate via payback. Members who present or conduct training outside of their normal work hours will be compensated at time for time via payback. Members will be compensated for travel time and such travel time will be included in the total sum of time beginning when members leave the GBPD and end when they return to the department. Supervisory approval will be required prior to any member flexing their hours or performing duties on

their off time. Under no circumstances will an officer receive overtime based on their membership in the POST.

7.15.5 Duties: The following duties will be in addition to the duties of the officer in their current capacity:

a. Facilitate critical incident debriefing at shift level and department level.
b. Provide private crisis intervention services as needed, while working within level of competence and make appropriate referrals.
c. Communicate ongoing information to the POST coordinator after deployment.
d. Attend and facilitate POST training to maintain skills and abilities.
e. Update peer support nomination/information forms to reflect current experience, education, and training in crisis management.

7.16 HONOR GUARD UNIT:

7.16.1 Honor Guard requirements include:

a. There are no minimum years of experience required. There will be a Department wide posting and selection based on seniority.

7.16.2 Honor Guard members selected to participate in Honor Guard Unit events shall be allowed to flex the hours in their workday for the purpose of travel to and/or attendance at events as requested by the Honor Guard Commander or designee.

7.16.3 This is intended to primarily apply to events where attendance at the event would serve as part or all of their workday depending on the length of the event.

7.16.4 Events short in nature, generally under 5-hours in length, shall continue to be compensated via payback for those on their normal off time.

7.16.5 Voluntary training attended by a member on their normal off time shall be compensated at a time for time rate via payback.

7.17 POLICE MOTORCYCLE OPERATOR/INSTRUCTOR:

7.17.1 Motorcycle Operator Qualifications:

a. Minimum of 3-years of service as a full-time, sworn police officer.
b. Current Class M (motorcycle) endorsement.
c. Successful completion of the Motorcycle Operator certification course.
d. Position openings will be based on needs and/or openings on a shift. The Chief will post department wide the number of positions available to attend the Motorcycle Operator certification course. If more officers sign to attend the Motorcycle Operator certification course than positions available or anticipate being available, then seniority will determine who attends the training.

7.17.2 Motorcycle Instructor: In addition to all requirements in 7.17.1:

e. Successfully complete a nationally recognized Police Motorcycle Instructor Course.

f. Successfully complete Instructor recertification.

g. The selection process will be in accordance with Section 7.3.

7.17.3 Police motorcycle instructors shall perform instruction under the same guidelines as members of the Training Unit with regards to compensation and flexing of work days/hours.

7.17.4 All other standards set forth in the GBPD Motorcycle Unit Policy shall apply.

7.18 TRAFFIC CRASH RECONSTRUCTION TEAM:

7.18.1 Requirements include:

a. Minimum of 3-years as a Green Bay police officer.

b. The selection process will be in accordance with 7.3

7.18.2 New members shall not be limited to those in the uniformed Patrol Division. Members assigned to the team must successfully complete extensive initial training sessions for the position. Team members shall flex their workday/workweek to attend Traffic Reconstruction Team training.

7.18.3 The desirable qualification of the Traffic Crash Reconstruction Team is a commitment by the officer to remain on the team for 5-years. Any officer who enters the program and becomes eligible for promotion during the first 3-years of the program must waive the officer's opportunity for any promotion until the full 3-year commitment to the program is completed.

7.18.4 Should an officer accept a position outside of the patrol division, excluding promotion to Command Officer rank, such officer shall retain the officer's status as a Traffic Crash Reconstruction Team member.

7.18.5 A Traffic Crash Reconstruction Team member may elect to discontinue the officer's status as a member after satisfying the 5-year commitment.

7.18.6 It is contemplated that this team shall be comprised of 4-members.

7.19 TRAINING UNIT: To establish a formal Training Unit made up of officers and supervisors responsible for providing continuing training in the Green Bay Police Department. The Department shall determine the number of officers in the Training Unit and the subjects of training for members of the Department. The Training Unit shall relate to training in the certifications of firearms, DAAT, EVOC, professional communications and vehicle contacts.

7.19.1 Training Unit requirements include:

a. Minimum of 3-years as a Green Bay police officer.

b. The selection process will be in accordance with Section 7.3.

7.19.2 Composition of Unit. The Training Unit shall be comprised of members of the

GBPD. One-half of the members of the Training Unit may come from the supervisors of the Department. One-half of the Training Unit shall come from members of the Police Association. Note: Management reserves the right to determine the supervisors who shall be part of the unit on an annual basis. The Training Unit supervisory staff may assign the Range Master to other shifts or work hours on their normal workday for training purposes.

7.19.3 Selection of Trainers. The complement of trainers would be selected from officers from Days/Special (excluding SROs and DTFs), Afternoons/CPOs, Evenings/Nights and the Detective Division.

7.19.4 Participation in Training Unit. Any Training Unit members who receive department sponsored training shall be committed to the Unit for 4-years. The Training Unit members may be directed to use their skills in any department position as directed by the Training Unit supervisory staff.

7.19.5 Assignment of Training. A minimum of 50% of the training assignments in any calendar year (on an hour-by-hour basis) shall be assigned to members of the Association. All training that Training Unit members attend shall be compensated under Article 29 of the Collective Bargaining Agreement with payback. All Training Unit meetings and training provided by Training Unit members who are instructing shall be compensated at time for time payback. Any time spent by a trainer in addition to 8½-hours conducting training shall be compensated at time and a half.

Unit members agree they are volunteering to change shifts as directed by the Training Unit. The Training Unit may assign instructors to other shifts or work hours for training purposes. The Department shall provide a 14-day notice for involuntary flexing of hours. The Training Unit may assign instructors to other shifts or work hours for in-service. Training Unit officers/supervisors conducting any training shall be required to document the training as directed by the Training Unit and submit the documentation to the Training Unit.

7.19.6 Selection for Education Opportunities. Training Unit members shall receive first opportunity for any training in any discipline in the Training Unit by seniority by shift.

Training opportunities for each shift shall be determined on the basis of the needs of the shift and after the consultation with the Training Unit members and Association representatives. If only one officer is to be trained in a certification, the training will be determined by the Police Department from the Training unit membership. In addition to the Rangemaster, the two nonsupervisory Training Unit members on each shift shall be trained and be eligible for recertification training in Firearms and DAAT certifications. These officers shall be eligible for training and recertification training in other certifications.

7.19.7 This Training Unit defines and deems "training" as neither a supervisory nor non- supervisory duty assignment, nor a duty assignment which may be performed by either supervisors or non-supervisors.

7.20 PROFESSIONAL STANDARDS DIVISION OFFICER POSITION:

7.20.1 Officers shall be selected from the pool of Field Training Unit Officers (FTOs) To qualify, an FTO must have previously been assigned at least one probationary officer for a minimum of one "step" as prescribed in the FTO program process. The active FTO lists to be used for selection shall be those maintained by the FTO Commander/Professional Standards Division (PSD).

7.20.2 Officers shall be assigned to this position for a 2-year, non-renewable period, regardless of the unit they were assigned from (FTO or Training). There is no time commitment to this position, however, once an officer accepts the position and leaves, whether by choice, completion of the assignment, or removed for cause, the officer shall not be eligible to re-apply.

7.20.3 Upon completion of this assignment, officers shall return to the opening available in the division they vacated, (Operations or Investigations) unless they post into an alternate position available at the completion of this assignment.

7.20.4 Officers shall be assigned to an administrative schedule, (5-2, 4-3), primary hours 7:00 a.m. to 3:30 p.m., with flexible hours dependent on the duties required. All flexing of hours require supervisory approval.

7.20.5 Officers retain the ability to sign for all overtime they would have been eligible for had they not accepted the PSD position.

7.21 DRUG TASK FORCE (DTF).

7.21.1 DTF requirements include:

a. Minimum of 3-years as a Green Bay police officer.

b. The selection process will be in accordance with Brown County's process.

7.21.2 Shift:

a. DTF shift will be a 5/2 – 4/3 schedule.

b. Shifts will commence at 11:30a–8p.

c. If court is scheduled for 10a or 10:30a, the officers will flex their shift (10a–6:30p).

d. If court starts before 10a, then the officer gets the court overtime.

7.21.3 Length of Term. Officers shall have a 4-year commitment with no ability to re-up. Officers assigned to DTF shall have their current assignment credited toward that 4-year period (e.g., officer XX has been there 1½ years, so Officer X will have an additional 2½ years). The increased commitment will benefit the police officer, police department and the DTF. It will allow for training, schools, etc. that can only be justified with a longer commitment.

7.21.4 Assignment to DTF & Interview Panel. An interview process is acceptable – utilizing the BCSD's current system, as long as the GBPD union has a seat on that panel (the GBPD sitting on the panel for a GBPD interview). In addition, officer candidates shall no longer be limited based upon seniority – it shall be opened up to all officer's holding the rank of Advanced Police Officer (APO) and above.

7.21.5 Flex Time & Vacation Days. Officers must provide a minimum 24-hour advance notice when requesting vacation. Flex time shall be determined consistent with Appendix D.

7.22 TRAFFIC OFFICERS:

7.22.1 Traffic Officer requirements include:

a. Minimum of 3-years as a Green Bay police officer.

b. The selection process will be in accordance with Section 7.3.

7.22.2 Officers will be assigned to an admin schedule 5-2 Monday thru Friday, 4-3 Monday thru Thursday work week. Officers on the same shift will work opposite work weeks to allow Monday thru Friday coverage. Traffic officers may be posted for pre-determined shifts and schedules based on the specific needs of the community and the department (i.e. a traffic officer on the evening shift or night shift would be assigned to a group to help address OWI concerns). Traffic Officers would be allowed to flex their hours to allow for special projects or problem areas. Flexing of shifts will need prior approval from the supervisor.

7.22.3 The traffic officer will count towards safety staffing.

7.22.4 The department may provide training for salvage inspection to the traffic officer who will be placed on a schedule that will allow for salvage inspection. While on inspection assignment, and with prior supervisory approval, the officer's hours can be flexed for the purposes of facilitating inspections that could not be done due to the requestor being unavailable during the officer's normal working hours. In the event the salvage inspection duties on any given day have been completed, the officer will resume other traffic unit duties as assigned or needed. Officers trained in salvage inspection will be allowed to continue working as a salvage inspector after completing traffic assignment. While performing scheduled salvage inspection duties, traffic officers will not count toward staffing numbers.

7.22.5 Police motorcycle operations certification is not required to be a traffic officer. If a traffic officer wishes to be motorcycle operation certified, the traffic officer(s) will be given preference to attend the certification training. All other requirements of the motorcycle unit must be met.

7.22.6 This will not preclude other officers from being assigned to traffic duties. Traffic duties can be assigned to patrol officers as staffing allows.

7.22.7 This will be a 4-year assignment, with a possible extension of an additional

2-years. Upon completion of this assignment, the officer will return to the patrol division where the officer's seniority will take them. The officer may apply for an alternative position available by department wide posting during or at the completion of this assignment. If a current traffic officer signs for a traffic officer position via department wide posting for a different shift and accepts the position, this officer's time in the traffic officer position does not start over and will be a continuation of the time already served as a traffic officer. Once an officer accepts and is assigned to the position as a traffic officer, that officer will not be eligible for another traffic assignment until all other eligible officers have had an opportunity to accept and be assigned to the traffic officer position.

7.22.8 Excess Hours. Hours approved by a supervisor that are worked in excess of the scheduled workday shall be compensated in accordance with Article 6. An exception is when the approved work is performed at the initiative of and voluntarily by the officer to meet the needs of the officer's assignment. These hours are compensated at straight time off in compliance with FLSA limitations. No officer may alter a work schedule for the sole purpose of qualifying for posted overtime with the exception of Packer Games.

7.23 <u>ANIMAL CONTROL OFFICER</u>

7.23.1 Qualifications for this position are:

a. Minimum of 3-years as a Green Bay police officer.

b. The selection process for Animal Control Officers will be in accordance with Section 7.3.

7.23.2 Core hours will be 7:30 AM to 4:00 PM on an administrative work schedule.

7.23.3 Animal Control Officers may flex their work hours with supervisory approval.

7.23.4 Animal Control Officers shall not be counted toward minimum safety staffing.

7.24 <u>RANGEMASTER</u>

7.24.1 Qualifications for this position are:

a. Minimum of 3-years as a Green Bay police officer.

b. The selection process for Range Master will be in accordance with Section 7.3.

7.24.2 Core hours will be 6:00 AM to 2:30 PM on an administrative work schedule.

7.24.3 The Rangemaster may flex his/her work hours with supervisory approval.

7.24.4 The Rangemaster may, with supervisory approval, be compensated time-for-time via payback for voluntarily performing Rangemaster duties outside of his/her regular work hours, not including annual Department in-service training.

7.24.5 Rangemaster must receive DAAT and Firearm certification within 6-months of appointment. If selected candidate does not have the necessary training at

the time of appointment, DAAT and Firearm training will be paid by the Police Department.

7.25 MAINTENANCE OF 2-PERSON BUFFER:

7.25.1 For those teams where it is specifically referenced in Article 7, officers may flex their workday to attend training dependent upon the maintenance of a 2-person buffer above the current safety staffing numbers. Compensation for training will be actual hours at time for time via payback for those on their off time.

a. Officers may be cancelled from training outside of 24-hours prior to the start of their regular shift in order to maintain the 2-person buffer.

b. If the training occurs during all or part of the officers' regular working hours, the officer may be pulled from training at any time to resume regular duties.

c. If the training does not occur during any part of the officer's regular working hours, the officer may not be pulled from the training within 24-hours prior to the start of their regular affected shift.

d. The Shift Commander has the discretion to allow attendance below the 2-person buffer on a case-by-case basis, dependent upon the work environment present at the time the training is to begin.

**ARTICLE 11 ADDITIONAL PAY**

11.1 SHIFT DIFFERENTIAL. All employees not assigned to the day shift shall receive, in addition to their base pay, an amount equal to the number of hours designated below based upon the hourly rate of top patrol officer. The shift differential pay shall be on a monthly basis, but paid with the employee's bi-weekly pay. Shift differential pay shall be administered in the same manner as it was when expressed in dollar amounts.

| | | |
|---|---|---|
| Patrol Division | 10:30a to 7:00p shift<br>2:15p. to 10:45p shift<br>10:30p to 7:00a shift<br>7:00p to 3:30a shift | 1½ hours per month 3 hours per month 4 hours per month<br>4 hours per month |
| Detective Division | 2:30p to 11:00p shift | 3 hours per month |
| Drug Task Force | 11:30a to 8:00p shift | 3 hours per month |

11.2. DETECTIVE PREMIUM PAY. Members promoted to the rank of Detective pursuant to Article 30 shall receive an $80.00 per month premium, which shall become part of their base salary upon promotion.

11.3. LANGUAGE PREMIUM PAY. Members with sufficient skill in communicating in one or more languages other than English shall receive an annual premium payment of $500.00, to be paid with their uniform allowance. The Department shall determine the means of measuring language skill and the languages that will be eligible for compensation.

11.4 PHYSICAL FITNESS PREMIUM PAY. Members shall be eligible for an annual physical fitness incentive of up to $540.00 upon successful completion of a City designed physical fitness test (PFT). Scheduling of the PFT, make-up, and/or PFT re-test shall be determined by the Chief of Police or designee.

A. A member who successfully completes the PFT with a passing time shall receive the incentive payment.

B. If a member does not pass the PFT on their first attempt, they shall have the following options:

1. A member completing the course but not passing may receive $100.00 for completion of the course, or;

2. The member may request a re-test, in writing, within 30 calendar days to the Chief of Police or designee. The member shall be allowed to re-take the PFT at the next available make-up date. If the member passes the PFT on their second attempt they shall receive an incentive payment of $250.00 in that calendar year.

C. All payments are subject to appropriate tax withholding rules.

D. A member who is incapacitated during the PFT may test at an alternate time established by the City. In the event a member has a medical restriction preventing

participation in a particular portion of the PFT, the City shall establish an alternate testing procedure.

E. A PFT design committee consisting of 1-representative selected by the Association, 1-Command Officer, and 1-representative from City Human Resources shall assist the Chief of Police or designee in developing changes to the physical fitness test. Outside experts such as trainers, physical therapists, or other appropriate personnel may be engaged by the PFT design committee to provide advice and guidance in developing the test.

ARTICLE 12 CLOTHING ALLOWANCE

12.1 The Department will supply newly hired officers with their initial issue of all uniforms and equipment necessary to perform the duties of a police officer. Those items will remain department property. After this initial equipment issuance, maintenance and replacement of uniforms and equipment is the member's responsibility, with the exception of firearms or any other equipment covered elsewhere in this Agreement.

12.2 An additional "clothing allowance" will be provided annually at the beginning of the employee's next calendar year for the maintenance and replacement of uniform items. Officers may purchase additional items on their own and maintain possession of all items purchased after initial department issue.

12.2.1 In the case of personnel assigned to plain clothes assignments (Investigations, Administration) the annual clothing allowance shall be $613.00.

12.2.2 In the case of personnel assigned to the Operations Division (uniform personnel) the annual clothing allowance shall be $572.00.

## ARTICLE 17
## HEALTH AND DENTAL INSURANCE

17.1 Employees will pay 15% and the City will pay 85% of the single or family premium for health care insurance benefits.

17.1.1 Employees may reduce their health insurance premium contribution up to a maximum of 2.5% per year by successfully participating in the Wellness Incentive Program as follows:

a. Employee's health care insurance premium will be reduced by 2.5% if the employee is carrying single coverage and participates in the Health Risk Assessment.

b. Employee's health care insurance premium will be reduced by 2.5% if the employee is carrying family coverage and both employee and spouse participate in the Health Risk Assessment.

c. Employee's health care insurance premium will be reduced by 1.25% if the employee is carrying family coverage and only the employee or the employee's spouse participates in the Health Risk Assessment.

17.2 Employees may participate in and pay health insurance premiums in accordance with the City's Health 1265 Program.

17.3 Employees will pay 12.5% and the City will pay 87.5% of the single or family premium for dental insurance benefits.

**Article 23 PERSONAL LEAVE DAYS**

23.1 BENEFIT. Regular full-time employees shall be eligible for 4-days annually. Personal leave days must be used during the calendar year earned. They may not be accumulated. The employee shall provide at least 7-days notice for a day off except that such notice can be waived by mutual agreement of the employer and the employee. The number of personal leave days earned shall be prorated for new full-time employees in their initial calendar year of employment and for employees in their final calendar year of employment with the City unless the employee terminates employment by eligibility and acceptance to the State Retirement system, disability, or death.

**ARTICLE 30 ADVANCEMENTS & PROMOTIONS**

30.1 DEFINITIONS

30.1.2 Command Officer: A sworn department member holding the rank of Lieutenant, Captain, Commander, or Chief of Police

30.1.3 Supervisor: A sworn department member holding the rank of Sergeant or above.

30.2 ADVANCEMENT TO ADVANCED POLICE OFFICER POSITION.

30.2.2 Police officers shall be advanced to the position of advanced police officer upon completion of 6-years of service with the GBPD as a police officer.

30.2.3 Upon being appointed as an Advanced Police Officer, an officer shall thereafter, and until advancement to Specialist I, be considered as an Advanced Police Officer and receive compensation as outlined in the Wage Schedule.

30.2.4 In order to diversify Advanced Officers amongst the various shifts, it is agreed that each shift shall maintain a minimum of 6-Advanced Officers. In case of a shift falling short of this minimum, the department shall assign Advanced Officers on the basis of inverse seniority.

30.2.5 For purposes of this section power shift shall be considered part of the afternoon shift.

30.3 ADVANCEMENT TO SPECIALIST I POSITION.

30.3.2 Officers shall be advanced to the position of Specialist I upon completion of 10-years effective as an officer with the Green Bay Police Department.

30.3.3 Upon being appointed as a Specialist I, an officer shall thereafter, and until advancement to Specialist II, be considered as a Specialist I and receive compensation as outlined in the Wage Schedule.

30.4 ADVANCEMENT TO SPECIALIST II POSITION.

30.4.2 Officers holding the position of Specialist I shall be advanced to the position of Specialist II upon the completion of 15-years with the Green Bay Police Department.

30.4.3 On appointment as a Specialist II, an officer shall thereafter be considered as a Specialist II and receive compensation as outlined in the Wage Schedule.

30.5 PROMOTION TO SERGEANT.

30.5.2 In order to be eligible for promotion to Sergeant, a member must have at least 6-years' experience as a Green Bay Police Officer, or at least 4-years' experience as a Green Bay Police Officer and at least 2-years' experience as a full-time, sworn police officer in a comparably-sized or larger agency.

30.5.3 The selection process for promotions to Sergeant shall be as follows:

a A written examination, scored on a 100-point scale. A score of 70% is required to pass this examination and continue in the promotional process.

b An assessment center evaluation, developed with an external consultancy specializing in promotional processes. The Association shall be meaningfully involved in the selection of individuals serving on evaluation panels and the specific performance dimensions to be measured. The assessment center shall be scored on a 100-point scale. The candidate must receive a score of 70 percent or higher to continue in the process.

c A Peer review consisting of:

- Peer review forms will be sent to 12 individuals with whom the candidate currently works. Reviewers will be randomly selected. A GBPPA representative shall observe the reviewer selection process.
- Reviews will be in the form of a survey using a 5-point Likert scale to measure peers' opinions of specific skills and abilities related to the Sergeant position.
- The Peer Review shall be scored on a 100-point scale. The reviews with the highest and lowest scores for each candidate will be discarded, then the remaining scores shall be averaged to determine the final score.

d Each candidate's cumulative score shall be determined by weighting the assessment center score at 80 percent and the peer review score at 20 percent.

e Upon successful completion of the selection process, the candidate's seniority points shall be added to their cumulative score for the assessment center and peer review to reach a final score. Using the member's seniority date, the member shall receive one point for every 3-complete years of service.

f Candidates shall be ranked by their final overall score and placed on a ranked eligibility list. The eligibility list shall be good for two (2) years or until all eligible candidates have been promoted, whichever comes first. The City shall allow the Association to review the list prior to its posting.

g Candidates shall be selected for promotion into vacant Sergeant positions in order of their ranked position on the eligibility list. In the event of a tie the candidate with the highest seniority shall be offered the position.

h Notwithstanding subsection (g) above, a vacant Sergeant position responsible for supervising Detectives shall be offered first to the highest-scoring Detective on the Sergeant promotional list.

- A sergeant so promoted to a Detective Sergeant position may not

bid to fill a vacant Sergeant position outside Detectives until the eligibility list they were promoted from has expired or has been exhausted.

- If there are no Detectives on the Sergeant promotional list, the position shall be filled using the selection process in Article 7.4 to choose from among incumbent sergeants with at least one (1) year experience in the Sergeant rank.

i The Chief may skip a candidate on the eligibility list for sustained allegations of serious policy violations. The decision to skip a member on an eligibility list for promotion is subject to the grievance procedure outlined in Article 3, but such grievance does not include the right to grieve prior discipline.

30.6 SERGEANTS' DUTIES AND ASSIGNMENTS

30.6.2 In addition to all duties of a patrol officer, Sergeants shall perform certain supervisory duties including, but not limited to:

a Conducting performance appraisals

b Participating in selection processes for specialty assignments and promotions to Sergeant or Detective

c Receiving complaints from community members and making recommendations regarding case handling

d After-action review of significant incidents such as pursuits, uses of force, and damage to city property

30.6.3 Effective January 1, 2023, sergeants selected to serve in specialty units shall perform supervisory functions, and the number of sergeants selected to serve in specialty units shall be limited to that necessary to provide adequate supervision to the unit. The parties recognize that it will take some amount of time to transition to Sergeants performing the role of team leader on the SWAT team.

30.6.4 Sergeants already serving on the SWAT and Dive Teams as of January 1, 2023 shall be allowed to continue in their current team role until such time as they leave the team. Any sergeant serving on both the SWAT and Dive Teams shall be required to choose one (1) team to continue serving on; no sergeant shall be authorized to serve on both the SWAT and Dive Teams from January 1, 2023 forward. The parties agree that it may be necessary to phase this change in to avoid negative impacts on staffing in specialty units.

30.6.5 Sergeants may serve in non-supervisory roles in the Honor Guard, Police Motorcycle Unit, and the Training Unit.

30.6.6 Sergeants shall only be assigned special projects and/or temporary assignments, pursuant to Article 5, when their assignment is to do supervisory

work.

30.6.7 Sergeants shall be members of the Bargaining Unit.

30.6.8 A seniority roster for Sergeants shall be maintained. Shift assignment shall be based upon time in grade (i.e., seniority within the rank of Sergeant), as opposed to Bargaining Unit seniority.

a If a Sergeant accepts a position in a specialty team or assignment where the Sergeant loses his/her rank or accepts any other position at a higher rank (i.e., Lieutenant, Captain, Commander), the time in that position shall not be included in Sergeant seniority if the member returns to the Sergeant position at a later date.

30.6.9 Bargaining Unit seniority (the total time the member has served in the Bargaining Unit at all ranks) shall be used for all other purposes, including seniority points for promotions, overtime assignments, vacation selection, and specialty assignments.

30.6.10 Sergeants shall be eligible for overtime in accordance with Article 6.

30.6.11 A Sergeant assigned to perform substantially the duties of a higher rank shall be compensated at the rate of a Step 1 Police Lieutenant. A Sergeant performing higher-classification work for a minimum of 45 minutes shall receive one (1) hour of Step 1 Lieutenant pay, and time for time after one (1) hour of higher classification work.

30.7 PROMOTION TO DETECTIVE

30.7.2 Effective January 1, 2023, the position of Detective shall be a promoted position, subject to the provisions of Wisconsin Statute 62.13 (5). Members currently holding the position of Detective on January 1, 2023 shall be automatically promoted to the rank of Detective.

30.7.3 In order to be eligible for promotion to Detective January 1, 2023, a member must have at least 6-years' experience as a Green Bay Police Officer, or at least 4-years' experience as a Green Bay Police Officer and at least 2-years' experience as a full-time, sworn police officer in a comparably sized or larger agency.

30.7.4 The selection process for promotions to Detective shall be as follows:

a A written examination, scored on a 100-point scale. A score of 70% is required to pass this examination and continue in the promotional process.

b A panel interview. The Association shall be meaningfully involved in the selection of individuals serving on interview panel and may review the questions to be asked, provided any Association representative reviewing the questions is not competing for the position. The interview shall be scored on a 100-point scale. The candidate must receive a score of 70

percent or higher to continue in the process.

c A Peer review consisting of:

- Peer review forms will be sent to 12 individuals with whom the candidate currently works. Reviewers will be randomly selected. A GBPPA representative shall observe the reviewer selection process.
- Reviews will be in the form of a survey using a 5-point Likert scale to measure peers' opinions of specific skills and abilities related to the Detective position.
- The Peer Review shall be scored on a 100-point scale. The reviews with the highest and lowest scores for each candidate will be discarded, then the remaining scores shall be averaged to determine the final score.

d Each candidate's cumulative score shall be determined by weighting the interview score at 80 percent and the peer review score at 20 percent.

e Upon successful completion of the selection process, the candidate's seniority points shall be added to their cumulative score for the interview and peer review to reach a final score. Using the member's seniority date, the member shall receive one point for every 3-complete years of service.

f Candidates shall be ranked by their final overall score and placed on a ranked eligibility list. The eligibility list shall be good for two (2) years or until all eligible candidates have been promoted, whichever comes first. The City shall allow the Association to review the list prior to its posting.

g Candidates shall be selected for promotion into vacant Detective positions in order of their ranked position on the eligibility list. In the event of a tie the candidate with the highest seniority shall be offered the position.

30.7.5 The Chief may skip a candidate on the eligibility list for sustained allegations of serious policy violations. The decision to skip a member on an eligibility list for promotion is subject to the grievance procedure outlined in Article 3, but such grievance does not include the right to grieve prior discipline.

30.8 DETECTIVES' DUTIES AND ASSIGNMENTS

30.8.2 A Detective assigned to an investigation shall have supervisory authority over sworn members at the rank of Officer and professional staff at the rank of Evidence Technician, Crime Analyst, and Criminalistic Specialist working on the investigation.

30.8.3 When a Detective position becomes vacant, the position on that shift shall be offered first to current Detectives by overall seniority. The resulting vacancy shall be filled according to the promotional process in Section 30.7.

30.9 PROMOTION TO LIEUTENANT.

30.9.2 Upon being promoted to the rank of Lieutenant the officer in question forfeits all Bargaining Unit seniority, except if the officer returns to the unit within 90-calendar days from the effective date of the promotion to Lieutenant the officer will maintain their original date of seniority in the police officer unit minus the number of days they were in the Lieutenant position. In the event that any Command Officer returns to the Bargaining Unit on either a voluntary or involuntarily basis to a rank or position within the Bargaining Unit, that officer returns as the least senior officer within the Bargaining Unit unless it is otherwise agreed in writing by the City and the Bargaining Unit.

30.9.3 Upon appointment to Lieutenant, the appointed officer shall thereafter perform only Command Officer duties in the manner and fashion described for Command Officer personnel in Section 1.2.

**Article 34 RESIDENCY**

34.1 Bona fide and continued residency within 35-miles of the jurisdictional border of the City of Green Bay shall be required for eligibility for the following positions or calls:

- K-9
- SWAT
- Eligibility for immediate need safety staffing shortage call-ins

"Immediate need" shall be defined as a demonstrable need at the time of the call. The burden shall be on the City to show such reasonable need.

Response time compensation for all officers living outside of the 35-mile jurisdictional border shall not exceed ½-hour.

## ARTICLE 39
## UNIT DUTIES

40.1 UNIT JOB DUTIES. Non-supervisory job duties shall generally be performed only by members of the Bargaining Unit. Sworn members of the Department who are not members of the bargaining unit may occasionally perform uniformed patrol duties, but in no event shall non-bargaining unit members be assigned to do Association work to avoid payment of overtime or to meet minimum staffing levels.

The City and GBPPA recognize that situations may occur where it is necessary that a supervisor become involved in an incident in a manner which may be considered outside of supervisory duties, such as an emergency or a situation the supervisor encounters in the course of his or her regularly assigned duties. The City, however, recognizes and agrees that the primary responsibility of a supervisor is to supervise officers in their work. The labor agreement provides for the situation where an obvious emergency need exists.

The parties also recognize the value to both the City and the Association of supervisory employees occasionally performing patrol duties in order to maintain familiarity with such duties and thus being able to more effectively supervise the work. Supervisors may be assigned to perform uniformed patrol duties for up to 24 hours per year, during which time they are permitted to perform the full range of patrol officer duties. A supervisor so assigned shall not be counted toward safety minimum staffing levels as described in Article 5. Supervisors shall not be used to replace or supplant sworn officers at any special event overtime or other overtime opportunities that are normally and customarily worked by sworn officers of the Department.

In addition to the emergency exception, the GBPPA agrees that it shall not grieve incidents of supervisors taking de minimus (minor, inconsequential, minimal) police action such as being approached by a citizen with a complaint (i.e. parking complaint, dispersal of loitering parties, etc.) which shall involve little time and keeps the supervisor in their primary duties of supervising the employee. However, if the incident becomes more involved than initially determined, then a unit shall be dispatched to the incident to take over the call. Situations must be weighed with efficiency and public service in mind, with constant re-evaluation of the situation in order to regain the functioning capacity of a supervisor.

- This restriction shall in no way restrict such personnel (supervisor) in taking any and all police action, or performing police duties and functions in relation to situations, events or circumstances encountered or observed by a supervisor in the course of the performance of their supervisory duties.
- A supervisor would not work an OWI from beginning to end, but would be expected to apprehend or arrest a traffic violator who is observed by the supervisor while performing the duty of supervising personnel.
- A supervisor would be expected to take de minimus police action related to a situation that arises in front of them and requires immediate police action and then turn this incident over to patrol units when/if further action is necessary (i.e. report is needed).

- The issues of unforeseen, emergent/emergency and or immediate need for police action allow for the supervisor to take action and once that initial action is taken to address these issues, patrol units, if not already on scene, shall be dispatched to take over the call and the supervisor shall return to their supervising capacity.
- The concepts of public service, efficiency, and unit duties are satisfied by: 1) the supervisor unit taking action in the unforeseen, emergent or need for immediate police action situations, 2) the patrol unit taking over the situation and performing the job functions of a patrol unit, and 3) the supervisor returning to their primary supervisory function.

Should a concern arise as to whether any action by a supervisor is not of a de minimus nature, or did not arise out of an emergent situation requiring immediate police action, the GBPPA agrees to first bring the concern to the attention of a ranking supervisor, Commander or above, as soon as possible after the concern arises. The City and the GBPPA agree to waive the contractual timelines regarding the filing of any grievance until the City and GBPPA have the opportunity to investigate and discuss the matter.

The Supervisory Unit shall perform Voice Stress Analyzer tests for internal affairs purposes, background checks, and other issues requiring a supervisory employee to perform such tests; Unit members shall perform all criminal investigation tests unless a supervisory employee is required or a qualified unit member is not available and a qualified supervisory employee is, and there is an immediate need to take the test for use in an interrogation then taking place.

40.2 COMMUNITY SERVICE OFFICERS (CSO). The duties of the CSO shall be assigned at the direction of the City. CSOs shall also perform the following duties which by this agreement may encroach on the duties regularly and customarily performed by members of the GBPPA. CSOs shall provide neighborhood based public service such as directing residents to proper resources, educating individuals and groups on various neighborhood problems and issues, quality of neighborhood and life issues, and provide other community-based service support to the residents as directed by the City.

In addition, CSOs shall provide support to the Department, assisting in some duties historically performed by GBPPA members. CSOs shall work with sworn personnel in various divisions within the department under the general supervision of the division supervisor. CSOs shall complete minor complaint reports similar to those taken over the phone by front desk personnel and perform follow-up work on reports generated from citizen on-line incident reports. CSOs shall assist with tasks such as answering telephone calls, assisting people who come to the station for assistance, filing paperwork, and other similar de minimis activities.

CSOs shall provide support to the patrol function in areas such as assisting with traffic control, (i.e., providing traffic direction, assisting disabled motorists, traffic hazards), crossing guard duty, animal complaints, lost and found, and other similar de minimis activities.

As this CSO support concept progresses, any changes that may infringe on work duties of the GBPPA shall be discussed. If the GBPPA believes any duties assigned to CSOs which encroach on officers' duties do not fall within this agreement, the GBPPA and the City shall open discussions to resolve

the matter. If the matter is unable to be resolved, the GBPPA retains the right to grieve the matter as defined in Article 3 of this Agreement. CSOs shall not be used to replace or supplant sworn officers at any special event overtime or other overtime opportunities that are normally and customarily worked by sworn officers of the Department. CSOs shall not be counted toward safety minimum staffing levels as described in Article 5.

# SCHEDULE A
# WAGE SCHEDULE

Increases effective the first day of the payroll period in which the effective date occurs

| Step | Classification | | January 1, 2023 3.25% | December 3, 2023 .25% | January 1, 2024 3% | December 31, 2024 .5% |
|---|---|---|---|---|---|---|
| 1 | New Hire | *Hourly* | $30.83 | $30.91 | $31.83 | $31.99 |
| | | *Bi-Weekly* | $2,329.83 | $2,335.65 | $2,405.72 | $2,417.75 |
| 2 | After 1 Year | *Hourly* | $31.73 | $31.81 | $32.76 | $32.93 |
| | | *Bi-Weekly* | $2,397.04 | $2,403.03 | $2,475.13 | $2,487.50 |
| 3 | After 2 Years | *Hourly* | $34.52 | $34.60 | $35.64 | $35.82 |
| | | *Bi-Weekly* | $2,608.15 | $2,614.67 | $2,693.11 | $2,706.57 |
| 4 | After 3 Years Top Patrol | *Hourly* | $37.93 | $38.03 | $39.17 | $39.37 |
| | | *Bi-Weekly* | $2,865.96 | $2,873.13 | $2,959.32 | $2,974.12 |
| 5 | After 6 Years Advanced Patrol Officer | *Hourly* | $38.81 | $38.91 | $40.08 | $40.28 |
| | | *Bi-Weekly* | $2,932.76 | $2,940.10 | $3,028.30 | $3,043.44 |
| 6 | After 10 Years Specialist | *Hourly* | $40.63 | $40.73 | $41.95 | $42.16 |
| | | *Bi-Weekly* | $3,069.80 | $3,077.47 | $3,169.80 | $3,185.65 |
| 7 | After 15 Years Specialist II | *Hourly* | $43.49 | $43.60 | $44.91 | $45.13 |
| | | *Bi-Weekly* | $3,286.00 | $3,294.22 | $3,393.05 | $3,410.01 |
| N/A | Patrol Sergeant | *Hourly* | $44.88 | $44.99 | $46.34 | $46.58 |
| | | *Bi-Weekly* | $3,391.38 | $3,399.86 | $3,501.85 | $3,519.36 |

A) The City has the discretion to hire new employees above Step 1, as long as the employee has the equivalent amount of experience from another jurisdiction. Such employees shall then advance according to the pay schedule.

B) Temporary Assignment Pay. Whenever an officer is assigned to perform the duties of a higher-ranking officer for a period of one complete shift or more, s/he shall be compensated at the rate of pay of the higher ranked officer.

C) Detective Pay. Detectives shall receive an $80 per month premium, which shall become a part of their base salary while assigned to detectives.

STATE OF WISCONSIN
DEPARTMENT OF ADMINISTRATION
DIVISION OF EXECUTIVE BUDGET AND FINANCE
DOA-2778 (R03/2019)

STATE CONTROLLER'S OFFICE-CMO
101 E. WILSON STREET, 5th FL
PO BOX 7932
MADISON, WI 53707-7932
(608) 261-7749

# MUNICIPAL COURT MONTHLY FINANCIAL REPORT

| County Name | County Code Number | Report for Month/Year |
|---|---|---|
| Brown | 05 | February, 2023 |
| **Municipal Name** | **Municipal Code Number** | **Telephone Number** |
| Green Bay Municipal Court | 231 | 920-448-3131 |

| I. MUNICIPAL COURT OFFICIAL | Total Amount Collected | Share to be retained by Municipality | Share to be sent to County | Share to be sent to State |
|---|---|---|---|---|
| 1. Forfeitures for Municipal Ordinance Violations (Except for Municipal Ordinances in Conformity with Ch 348,Stats.) | $ 57,123.09 | $ 57,123.09 | | |
| Adjustment (if applicable) | $ .00 | $ .00 | | |
| 2. Municipal Court Costs (Chapter 814, Subchapter II, s. 814.65, Stats.) | $ 24,552.16 | $ 21,415.91 | | $ 3,136.25 |
| Adjustment (if applicable) | $ .00 | $ .00 | | $ .00 |
| 3. Penalty Surcharges (s. 757.05, Stats.) | $ 13,884.02 | | | $ 13,884.02 |
| Adjustment (if applicable) | $ .00 | | | $ .00 |
| 4. County Jail Surcharges (s. 302.46(1)(a), Stats.) | $ 6,071.26 | | $ 6,071.26 | |
| Adjustment (if applicable) | $ .00 | | $ .00 | |
| 5. Driver Improvement Surcharges (s. 346.655, Stats.) | $ 8,376.17 | | $ 4,061.00 | $ 4,315.17 |
| Adjustment (if applicable) | $ .00 | | $ .00 | $ .00 |
| 6. Crime Lab and Drug Enforcement Surcharges (s. 165.755(4), Stats.) | $ 7,976.72 | | | $ 7,976.72 |
| Adjustment (if applicable) | $ .00 | | | $ .00 |
| 7. Domestic Abuse Surcharges (s. 973.055(2)(b), Stats.) | $ .00 | | | $ .00 |
| Adjustment (if applicable) | $ .00 | | | $ .00 |
| 8. Truck Weight Restrictions (Municipal Ordinances in Conformity with Ch. 348, Stats., s. 66.12(3)(c)) | $ .00 | $ .00 | | $ .00 |
| Adjustment (if applicable) | $ .00 | $ .00 | | $ .00 |
| 9. Ignition Interlock Device Surcharge (s. 343.301(5), Stats.) | $ 950.00 | | $ 950.00 | |
| Adjustment (if applicable) | $ .00 | | $ .00 | |
| 10. GPS Tracking Surcharge (for violations of ordinances conforming to s. 813.12 or s.813.125, Stats.) | $ .00 | | | $ .00 |
| Adjustment (if applicable) | $ .00 | | | $ .00 |
| 11. Safe Ride Program (s. 85.55, Stats.) | $ 1,043.80 | | | $ 1,043.80 |
| Adjustment (if applicable) | $ .00 | | | $ .00 |
| 12. Totals | $ 119,977.22 | $ 78,539.00 | $ 11,082.26 | **Pay This Amount** $ 30,355.96 |

**Continue onto the next page.**

STATE OF WISCONSIN
DEPARTMENT OF ADMINISTRATION
DIVISION OF EXECUTIVE BUDGET AND FINANCE
DOA-2778 (R03/2019)

STATE CONTROLLER'S OFFICE-CMO
101 E. WILSON STREET, 5th FL
PO BOX 7932
MADISON, WI 53707-7932
(608) 261-7749

**MUNICIPAL COURT MONTHLY FINANCIAL REPORT**

**II. CERTIFICATION OF MUNICIPAL COURT OFFICIAL**

I hereby certify that this report reflects all actions requiring forfeitures, court costs and surcharges collected during the month designated.

Name: NEIL BASTEN Signature: Neil Basten Date: 3-1-23

**III. TREASURER'S CERTIFICATION**

I hereby certify that the above amount due the state has been received. After so certifying, a copy of this report will be returned to the signer of this report as a receipt, and the stated amount will be remitted to the Department of Administration with this report.

Treasurer: Paul R. Maulen Date: 3/2/23

In the event the Department of Administration has questions about this report and payment, who should we contact?

| Name: | Telephone # | Email Address |
|---|---|---|
| Neil Basten | 920-448-3131 | neilba@greenbaywi.gov |

**RESOLUTION AUTHORIZING**
**TO BUDGET AMENDMENT**

**March 21, 2023**

BY THE COMMON COUNCIL OF THE CITY OF GREEN BAY, RESOLVED:

Pursuant to the recommendation of the Finance Committee at its meeting of March 14, 2023, the following 2022 amendment of funds is hereby authorized:

| | ACCOUNT | | AMOUNT |
|---|---|---|---|
| Increase: | 101300 50501 | Police-Overtime | $5,172.95 |
| Increase: | 101300 46223 | Police Overtime Reimbursement | $5,172.95 |

***This budget amendment is for 2022 unbudgeted overtime for staffing at the Bellin Women's Half Marathon and the Great Toy Giveaway.*

| | | | |
|---|---|---|---|
| Increase: | 101400 50501 | Fire-Overtime | $106.40 |
| Increase: | 101400 46223 | Fire Overtime Reimbursement | $106.40 |

***This budget amendment is for 2022 unbudgeted overtime for staffing for the Brown County Fire Investigation Task Force.*

| | | | |
|---|---|---|---|
| Increase: | 101400 50501 | Fire-Overtime | $3,767.50 |
| Increase: | 101400 43611 | Fire-State Overtime Reimbursement | $3,767.50 |

***This budget amendment is for December 2022 unbudgeted state reimbursements of costs incurred for employees to attend USAR (Urban Search & Rescue) trainings.*

| | | | |
|---|---|---|---|
| Increase: | 101300 54051 | Police-Medical Supplies | $393.00 |
| Increase: | 101160 45110 | Muni Court-Ordinance Violations | $393.00 |

***This budget amendment is for November 2022 unbudgeted costs to offset the expenses paid to local hospitals for blood draws resulting from the police department's OWI arrests-1st offense that are collected from invoicing the person that was arrested.*

Adopted _____

Approved _____

_____
Mayor

_____
Clerk

**RESOLUTION AUTHORIZING**
**TO BUDGET AMENDMENT**

**March 21, 2023**

BY THE COMMON COUNCIL OF THE CITY OF GREEN BAY, RESOLVED:

Pursuant to the recommendation of the Finance Committee at its meeting of March 14, 2023, the following 2023 amendment of funds is hereby authorized:

| | ACCOUNT | | AMOUNT |
|---|---|---|---|
| Increase: | 101400 50501 | Fire-Overtime | $956.89 |
| Increase: | 101400 46223 | Fire Overtime Reimbursement | $956.89 |

***This budget amendment is for 2023 unbudgeted overtime for staffing for the Brown County Fire Investigation Task Force.*

| | | | |
|---|---|---|---|
| Increase: | 101400 50501 | Fire-Overtime | $2,420.00 |
| Increase: | 101400 43611 | Fire-State Overtime Reimbursement | $2,420.00 |

***This budget amendment is for January 2023 unbudgeted state reimbursements of costs incurred for employees to attend USAR (Urban Search & Rescue) trainings.*

Adopted _____

Approved _____

_____
Mayor

_____
Clerk

# RESOLUTION AUTHORIZING TRANSFER OF FUNDS

## March 21, 2023

BY THE COMMON COUNCIL OF THE CITY OF GREEN BAY, RESOLVED:

Pursuant to the recommendation of the Finance Committee at its meeting of March 14, 2023, the following 2023 transfer of funds is hereby authorized:

| | ACCOUNT | | AMOUNT |
|---|---|---|---|
| From: | 101099-59001 | Contingency | $5,356.64 |
| To: | 101102-59003 | Assessors-Tax Adjustments | $5,356.64 |

This budget amendment is for the City's portion of property taxes for St. John's (parcel 14-426 for $4,900.97 and 14-410-A for $455.67) for total of $5,356.64.

Adopted _____

Approved _____

_____
Mayor

_____
Clerk

# RESOLUTION DESIGNATING PUBLIC DEPOSITORIES AND AUTHORIZING WITHDRAWAL OF CITY MONEYS

Green Bay, Wisconsin
March 21, 2023

BY THE COMMON COUNCIL OF THE CITY OF GREEN BAY, RESOLVED:

That each of the following banks:

| | |
|---|---|
| Associated Bank | First Business Bank |
| Bank First | JP Morgan Chase |
| BMO Harris | Local Government Investment Pool (LGIP) |
| BNY Mellon\|Pershing LLC (Ehlers)* | Nicolet National |
| Community First Credit Union | US Bank |

**New addition*

(the "Bank"), is qualified as a public depository under Chapter 34, Wisconsin Statutes, is hereby designated as a depository in which the funds of this Municipality may from time to time be deposited; that specifically described account(s) may be opened and maintained in the name of this Municipality with the Bank subject to the rules and regulations of the Bank from time to time in effect; that the person(s) and the number thereof designated by title opposite the specific designation of account(s) shall be authorized, for and on behalf of this Municipality, to sign order checks as provided in Section 66.042, Wis Stat., for payment or withdrawal of money from said account(s) and to issue instructions regarding the same and to endorse for deposit, negotiation, collection or discount by Bank any and all checks, drafts, notes, bills, certificates of deposit or other instruments or orders for the payment of money owned or held by said Municipality; that the endorsement for deposit may be in writing, by stamp, or otherwise, with or without designation of signature of the person so endorsing; and that any officer, agent or employee of this Municipality is hereby authorized to make oral or written requests of the Bank for the transfer of funds or money between accounts maintained by the Municipality at the Bank.

FURTHER RESOLVED, that the Bank be and is hereby authorized and directed to honor, certify, pay and charge to any of the accounts of this Municipality, all order checks for the payment, withdrawal or transfer of funds or money deposited in these accounts or to the credit of this Municipality for whatever purpose or to whomever payable, including requests for conversion of such instruments into cash as well as for deduction from and payment of cash out of any deposit, and whether or not payable to, endorsed or negotiated by or for the credit of any persons signing such instrument or payable to or for the credit of any other officer, agent or employee of this Municipality, when signed, accepted, endorsed or approved as evidenced by original or facsimile signature by the person(s), and the number thereof, designated by title opposite the designation of the accounts described in the foregoing resolution, and to honor any request(s) made in accordance with the foregoing resolution, whether written or oral, and including but not limited to, request(s) made by telephone or other electronic means, for the transfer of funds or money between accounts maintained by this Municipality at the Bank, and the Bank shall not be required or under any duty to inquire as to the circumstances of the issuance or use of any such instrument or request or the application or use of proceeds thereof.

FURTHER RESOLVED, that the Bank be and is hereby authorized to comply with any process, summons, order, injunction, execution, distraint, levy, lien, or notice of any kind (hereafter called "Process") received by or served upon the Bank, by which, in the Bank's opinion, another person or entity claims an interest in any of these accounts and Bank may, at its option and without liability, thereupon refuse to honor orders to pay or withdraw sums from these accounts and may hold the balance therein until Process is disposed of to Bank's satisfaction.

FURTHER RESOLVED, that any one of the persons holding the offices of this Municipality which may be designated are hereby authorized (1) to receive for and on behalf of this Municipality, securities, currency or any other property of whatever nature held by, sent to, consigned to or delivered to the Bank for the account of or for delivery to this Municipality, and to give receipt therefor, and the Bank is hereby authorized to make delivery of such property in accordance herewith, (2) to sell, transfer, endorse for sale or otherwise authorize the sale or transfer of securities or any other property of whatever nature held by, sent to, consigned to or delivered to the Bank for the account of or for delivery to this Municipality, and to receive and/or apply the proceeds of any such sale to the credit of this Municipality in any such manner as he/she/they deem(s) proper, and the Bank is hereby authorized to make a sale or transfer of any of the aforementioned property in accordance herewith, and (3)

pursuant to Section 34.07, Wis. Stats., to accept such security and to execute such documents as said officer deems proper and necessary to secure the funds of this Municipality and to issue instructions regarding the same.

FURTHER RESOLVED, that this Municipality assumes full responsibility for any and all payments made or any other actions taken by the Bank in reliance upon the signatures, including facsimiles thereof, of any person or persons holding the offices of this Municipality which may be designated regardless of whether or not the use of a facsimile signature was unlawful or unauthorized and regardless of by whom or by what means the purported signature or facsimile signature may have been affixed to any instrument if such signatures resemble the specimen or facsimile signatures provided to the Bank, for refusing to honor any signatures not provided to the Bank, for honoring any requests for the transfer of funds or money between accounts or for the instructions from the persons designated in the foregoing resolutions regarding security for the accounts notwithstanding any inconsistent requirements of this Municipality not expressed in the foregoing resolutions, and that this Municipality agrees to indemnify and hold harmless the Bank against any and all claims, demands, losses, costs, damages or expenses suffered or incurred by the Bank resulting from or arising out of any such payment or other action.

FURTHER RESOLVED, that the Clerk of this Municipality be and hereby is authorized and directed to certify to the Bank the foregoing resolutions, that the provisions thereof are in conformity with law, the names, incumbencies and specimen or facsimile signature(s) on signature cards of the officer or officers named therein, and that the foregoing resolutions and signature cards and the authority thereby conferred shall remain in full force and effect until this Municipality notifies the Cashier of Bank to the contrary in writing; and the Bank may conclusively presume that such resolutions and signature cards are in effect and that the persons who may be identified from time to time as officers of the Municipality have been duly elected or appointed to and continue to hold such offices.

Adopted: _____, 2023

Approved: _____, 2023

_____
Mayor

ATTEST:

_____
City Clerk

ZONING ORDINANCE NO. 05-23

AN ORDINANCE REPEALING ZONING ORDINANCE NO. 14-21 AND CREATING A PLANNED UNIT DEVELOPMENT (PUD) OVERLAY DISTRICT FOR PART OF 216 SOUTH MILITARY AVENUE
(ZP 22-41)

THE COMMON COUNCIL OF THE CITY OF GREEN BAY DOES ORDAIN AS FOLLOWS:

**SECTION 1.** The Planned Unit Development (PUD) for 216 South Military Avenue created by Zoning Ordinance No. 14-21 is hereby repealed in its entirety. It is the intention of the Common Council to replace the PUD established in ZO 14-21 with the PUD created in this ordinance and in Zoning Ordinance No. 06-23.

**SECTION 2.** Pursuant to Section 44-30, Green Bay Municipal Code, together with the zoning map referred to therein, a new PUD is created for 216 South Military Avenue on the following described property:

Legal Description: Lot 1 of Certified Survey Map No. 1366, being part of Private Claim No. 1 and the vacant strip of land, West Side of Fox River, in the City of Green Bay, Brown County Wisconsin except that point commencing at the Southeast corner of said Lot 1 of Certified Survey Map No. 1366, thence N26°10'17"E, 276.60 feet along the West right of way of South Military Avenue to the point of beginning; thence N26°10'17"E, 246.18 feet along said West right of way; thence 18.91 feet along the arc of a 12.00 foot radius curve to the left whose chord bears N18°57'46"E from said West right of way of South Military Avenue to the South right of way of Leo Street; thence N64°05'49"E, 174.77 feet along said South right of way of Leo Street; thence S26°10'17"W, 258.24 feet; thence S64°05'49"W, 186.83 feet to the point of beginning.

Tax Parcel: Part of Parcel 6-266-E

**SECTION 3.** Pursuant to Chapter 44, Article XX, Green Bay Municipal Code, as they apply, the following conditions are imposed:

A. Purpose and Intent. The Planned Unit Development (PUD) is being utilized to permit the permanent use of both Community Center Commercial (C3) and targeted Light Industrial (LI) uses in the 7.25 acres bounded by South Military Avenue on the east, Green Bay and Western Railroad on the south, Randall Street on the west, Alfran Street, and Leo Street on the north. PUD addresses targeted development areas with differing use and design standards along commercial and residential corridors and the interior of the block. To meet the distinctions in targeted development, the site is separated into three development areas

Development Area A: Starting at the Southeast Corner of Lot 2 on the accompanying CSM (Exhibit A); the area identified in the development area map (Exhibit C) which is generally south of Lot 2 to the existing northern wall of the former Shopko building. Area generally 186.83 feet of the right of way of South Military Avenue and 170 feet south of Lot 2 to the existing feet building.

Development Area B. All areas north of the plane of the southerly right of way of Leo Street extended westerly to Randall Court noted on said attached development area (Exhibit C)

Development Area C. Remaining areas on Lot 1 of said attached development area. (Exhibit C)

B. Development Site. Area included within this PUD is proposed as Lot 1 of an accompanying Certified Survey Map (Exhibit A). The existing parcel located at South Military Avenue and Leo Street will be divided into a separate lot comprising 7.25 acres/315,765 square feet. The existing site has a building with warehousing, educational/training facility and parking lot uses as well as a separate building with a liquor store use.

C. Land Use Regulation.

1. Permitted Uses.

Development Area A:
a. Uses as allowed under the Community Center Commercial (C3) district.
b. Limited production and processing
c. Contractor yard (Must be fully enclosed within building)
d. Dry cleaning establishment, commercial laundry
e. Research and development facility
f. Material recovery facility (minor)*
g. Ground transportation service *
h. Package delivery service *
i. Public safety/service facility
j. Telecommunication tower, wireless communication facility *
k. General office
l. Government office
m. Bank or other financial institution
n. Clinic, health care facility
o. Artist's studio
p. Dwelling in conjunction with business *
q. Live work unit *

DRAFT

r. Warehousing
s. Educational/training facility
*Conditional use subject to approval by Common Council

Development Area B:
a. Uses as allowed under the Community Center Commercial (C3) district.
b. Limited production and processing
c. Contractor yard (Must be fully enclosed within building)
d. Dry cleaning establishment, commercial laundry
e. Research and development facility
f. Material recovery facility (minor)*
g. Ground transportation service *
h. Package delivery service *
i. Public safety/service facility
j. Telecommunication tower, wireless communication facility *
k. General office
l. Government office
m. Bank or other financial institution
n. Clinic, health care facility
o. Artist's studio
p. Dwelling in conjunction with business *
q. Live work unit *
r. Warehousing
s. Educational/training facility
*Conditional use subject to approval by Common Council

Development Area C:
a. Uses as allowed under the Community Center Commercial (C3) district.
b. Limited production and processing
c. Contractor yard (Must be fully enclosed within building)
d. Dry cleaning establishment, commercial laundry
e. Research and development facility
f. Material recovery facility (minor)*
g. Ground transportation service *
h. Package delivery service *
i. Public safety/service facility
j. Telecommunication tower, wireless communication facility *
k. General office
l. Government office
m. Bank or other financial institution
n. Clinic, health care facility
o. Artist's studio
p. Dwelling in conjunction with business *
q. Live work unit *

DRAFT

r. Warehousing
s. Educational/training facility
*Conditional use subject to approval by Common Council

2. Prohibited Uses.
a. Outdoor storage and display of product/material/equipment
b. Sale or display of vehicles/equipment
c. Accessory Structures Uses
d. Self-service storage warehousing

D. Dimensional and Area Requirements: Dimensional and area requirements or principal structure and surface parking on the subject property shall be regulated as follows:
a. Development Area A,B and C: Dimensional and area requirements for principal structures on subject property shall be compliant with Community Center (C3) district.

F. Access Circulation and Parking. Access, circulation, and parking within the PUD area shall meet the standards as set forth within the Chapter 44, Article XVIII of the Green Bay Municipal Code, and as modified as follows:
a. Access to the site shall be maintained through a shared access easement between Lot 1 of attached proposed Certified Survey Map and Lot 2 of said Certified Survey Map. Shared access easement must be recorded with the Brown County Register of Deeds prior to the issuance of building permits.
b. All access points shall meet Green Bay Municipal Code and must be approved by the city traffic engineer.
c. No railroad spurs are permitted off of any railroad property onto the Development Area C.

G. Building and Site Maintenance. Existing buildings and grounds shall be maintained in good repair.
a. Development Area A: Any new building for C3 development uses shall have a building footprint which encompasses minimum of 50% of the street frontage parallel to South Military Avenue within the development area.
No new buildings or building additions shall be built in Development Area A for any LI Light Industrial uses.

b. Development Areas B and C: No fences are allowed to be erected within 200 feet of the public right of way of South Military Avenue, Leo Street, or Alfran Way

c. No building design element associated with industrial uses shall be permitted e.g. dock doors, garages, lifts,

mechanicals or other such similar design features as determined by the Development Director or their designee shall be allowed in areas visible from South Military Avenue. No new loading docks on the east, north, or south faces with the exception of existing loading docks.

d. Service and loading is permitted along the Randall Street right of way.
e. Any reconstruction (beyond maintenance) must comply with Green Bay Municipal Code requirements for C3 dimensional and other regulatory standards.

H. Lighting. All lighting on the subject property shall be regulated as set forth in Chapter 44, Article V, Division 8, Green Bay Municipal Code.

I. Signage. All signage shall be regulated as follows:
   a. New signs, including but not limited to freestanding and wall signs, shall conform to C3 Zoning District requirements, as specified in Chapter 30, Signs, Green Bay Municipal Code in addition with the following:
   b. One (1) pole/pylon directory sign or one (1) monument directory sign is permitted to display the whole of the tenants within Development Area A, B, and C campus.
      i. Any tenant within Development Area A, B, or C may be apart of signage
      ii. Freestanding signage to display the whole of tenants is limited to either one (1) pylon directory sign or one (1) monument directory sign.
      iii. Either pole/pylon sign or monument sign must meet height and size standards of C3 Zoning District requirements.

   c. Any changes to the design, location, or size of the existing freestanding signs require review and approval of a Sign Permit and must conform to the following:
      i. These signs must remain perpendicular to the nearest public right-of-way.
      ii. Pole signs shall be no higher than existing conditions at the time of PUD approval.
      iii. Tenant panels on directory signs may be internally illuminated. No exterior lighting is permitted.
      iv. If existing signage is used as a directory sign for two or more tenants within Development Areas A, B, or C; that sign will become the single pylon or directory sign or monument directory sign for the entire PUD.

DRAFT

J. Site Plan Review & Standards

a. Prior to the issuance of any building permits, site plans shall be submitted and reviewed per Chapter 44 Article XIX, Green Bay
b. If any site has been purchased, it shall not be further divided without review and consent of the City.
c. An updated change of use site plan must be submitted to the Department of Community and Economic Development to denote the existing change of use on the site.
d. Temporary barriers on the site such as jersey walls or temporary concrete walls must be removed.
e. All existing and new service, loading, and refuse areas shall be screened in accordance with Chapter 44, Section 44-1917, Green Bay Municipal Code.
f. Any ground-mounted and/or roof mounted mechanicals shall be screened in accordance with Chapter 44, Section 44-1917, Green Bay Municipal Code.

K. Landscaping/Transitional Yard

a. Prior to the issuance of any building permits, detailed landscape plans shall be submitted and reviewed per Chapter 44, Article XIX, Division 5, Green Bay Municipal Code.
b. Within 12 months of approval of PUD by Common Council, Development Area C must be improved to meet standards of Article XIX, Division 5, Section 44-1964, Green Bay Municipal Code along the right of way adjacent to Randall Court.
c. If a land use change occurs in Development Area B which is one of the permitted light industrial uses, an approved site plan must include improvement standards of Article XIX, Division 5, Section 44-1694, Green Bay Municipal Code along the right of way adjacent to Randall Court
d. All existing landscaped areas must be maintained in good repair.

L. Prior to the issuance of any building permits, stormwater management plans, meeting the standards established by the City's Department of Public Works, shall be submitted to and approved by the City. See Chapter 30, Green Bay Municipal Code.

M. Compliance with all of the regulations of the Green Bay Municipal Code not covered under the PUD.

**SECTION 4.** The provisions of this ordinance, including, without limitation, the granting of a conditional use permit and all obligations, conditions, restrictions, and limitations related thereto shall run with and be jointly and severally binding upon the fee simple owner and the beneficial owner of all or any portion of the subject property.

DRAFT

All obligations, requirements, and rights of the owner shall run with the land and shall automatically be assigned to be binding upon and inure to the benefit of its successors and assigns, including, but not limited to, any entity acquiring any financial interest in the subject property and/or any subsequent owner and/or beneficial owner of all or any portion of the subject property.

**SECTION 5.** Each exhibit which is attached to this ordinance is deemed to be and is expressly made a part of and incorporated into this ordinance to the same extent as if each such exhibit and the plans identified therein had been set forth in its entirety in the body of this ordinance.

**SECTION 6.** All ordinances or parts of ordinances in conflict herewith are hereby repealed.

**SECTION 7.** In addition to all other remedies available to the City of Green Bay, the City may decline to issue any building or other permits otherwise required by any ordinance of this City while any violation of this ordinance remains uncured.

**SECTION 8.** If any provision in this ordinance is held invalid or unconstitutional by any court of competent jurisdiction, such a decision shall not affect the validity of any other provision of this ordinance. It is hereby declared to be the intention of the City of Green Bay that all provisions of this ordinance are separable.

**SECTION 9.** This ordinance shall not take effect until a public hearing is held thereon as provided by Section 44-82, Green Bay Municipal Code, and the adoption and publication of this ordinance.

Dated at Green Bay, Wisconsin, this _____ day of _____, 2023.

APPROVED:

_____
Mayor Eric Genrich

ATTEST:

_____
Clerk

Attachments:

Exhibit A – Proposed Certified Survey Map
Exhibit B – Existing Site Survey Map
Exhibit C – Development Area Map

DRAFT

Exhibit A

# PRELIMINARY

# CERTIFIED SURVEY MAP NO. _____

LOT 1 OF CERTIFIED SURVEY MAP NO. 1366, BEING PART OF PRIVATE CLAIM NO. 1 AND THE VACANT STRIP OF LAND, WEST SIDE OF FOX RIVER, IN THE CITY OF GREEN BAY, BROWN COUNTY, WISCONSIN

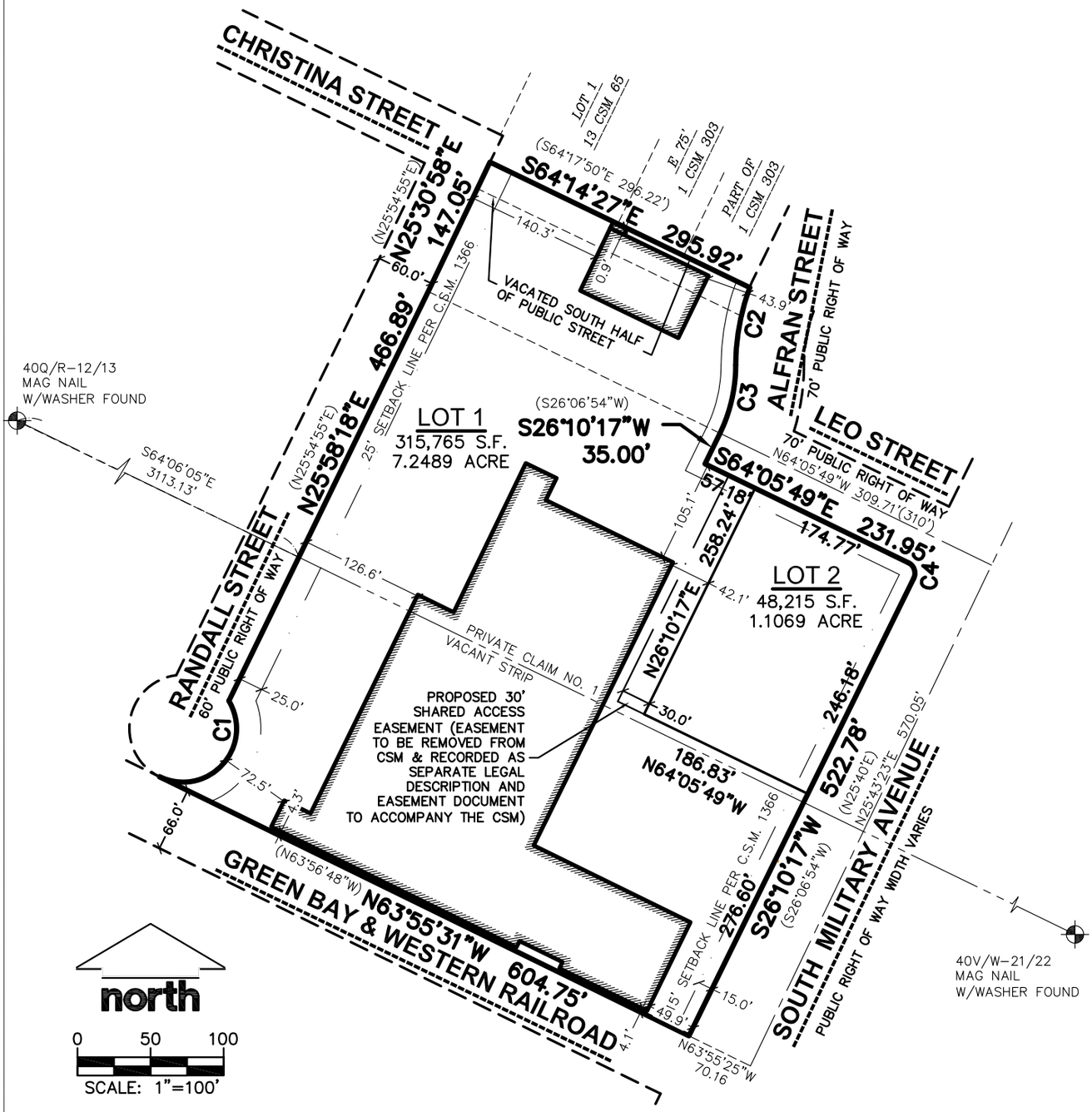


## LEGEND

- GOVERNMENT CORNER
- ¾" REBAR FOUND
- 3/4" x 24" REBAR SET (1.50 LBS/LF)
- PLAT BOUNDARY
- CHORD LINE
- CENTERLINE
- RIGHT-OF-WAY LINE
- PLATTED LOT LINE
- SECTION LINE
- EASEMENT LINE
- SETBACK LINE

## NOTES

1. FIELD WORK PERFORMED ON JULY 12, 2022.
2. BEARINGS ARE REFERENCED TO THE WISCONSIN COUNTY COORDINATE SYSTEM, BROWN COUNTY. THE WESTERLY LINE OF S. MILITARY AVE. HAVING A BEARING OF S26°10'17"W.
3. SEE SHEET 2 FOR CURVEY TABLE.

JULY 21, 2022

WISCONSIN
ANDREW W. WILKOWSKI
S-3121
WATERTOWN WI
LAND SURVEYOR

THIS INSTRUMENT DRAFTED BY ANDREW W. WILKOWSKI, S-3121


SURVEYED BY: JSD
WAUSAU REGIONAL OFFICE
7402 STONE RIDGE DRIVE, SUITE 4
WESTON, WISCONSIN 54476
P. 715.298.6330


SURVEYED FOR:

| | | | |
|---|---|---|---|
| PROJECT NO: | 22-11365 | SURVEYED BY: | JSD |
| FIELDBOOK/PG: | – | DRAWN BY: | DHS |
| SHEET NO: | 1 OF 3 | CHECKED BY: | AWW |
| | | APPROVED BY: | AWW |

VOL. _____ PAGE _____
DOC. NO. _____
C.S.M. NO. _____


File: N:\PROJECTS\2022\2211365\DWG\Survey Sheets\2211365 CSM.dwg Layout: CSM 1 of 3 User: dspanjar Plotted: Sep 13, 2022 – 10:42am

Exhibit B

# - Planned Unit Development -

Lot 1 of the proposed Certified Survey Map being part of Lot 1, Volume 5, Certified Survey Maps, page 177, Map Number 1366, Document Number 802454, being part of Private Claim 1, West Side of the Fox River, and part of vacant strip, in the City of Green Bay, Brown County, Wisconsin.

Graphic Scale

0 50 100 150 200 250

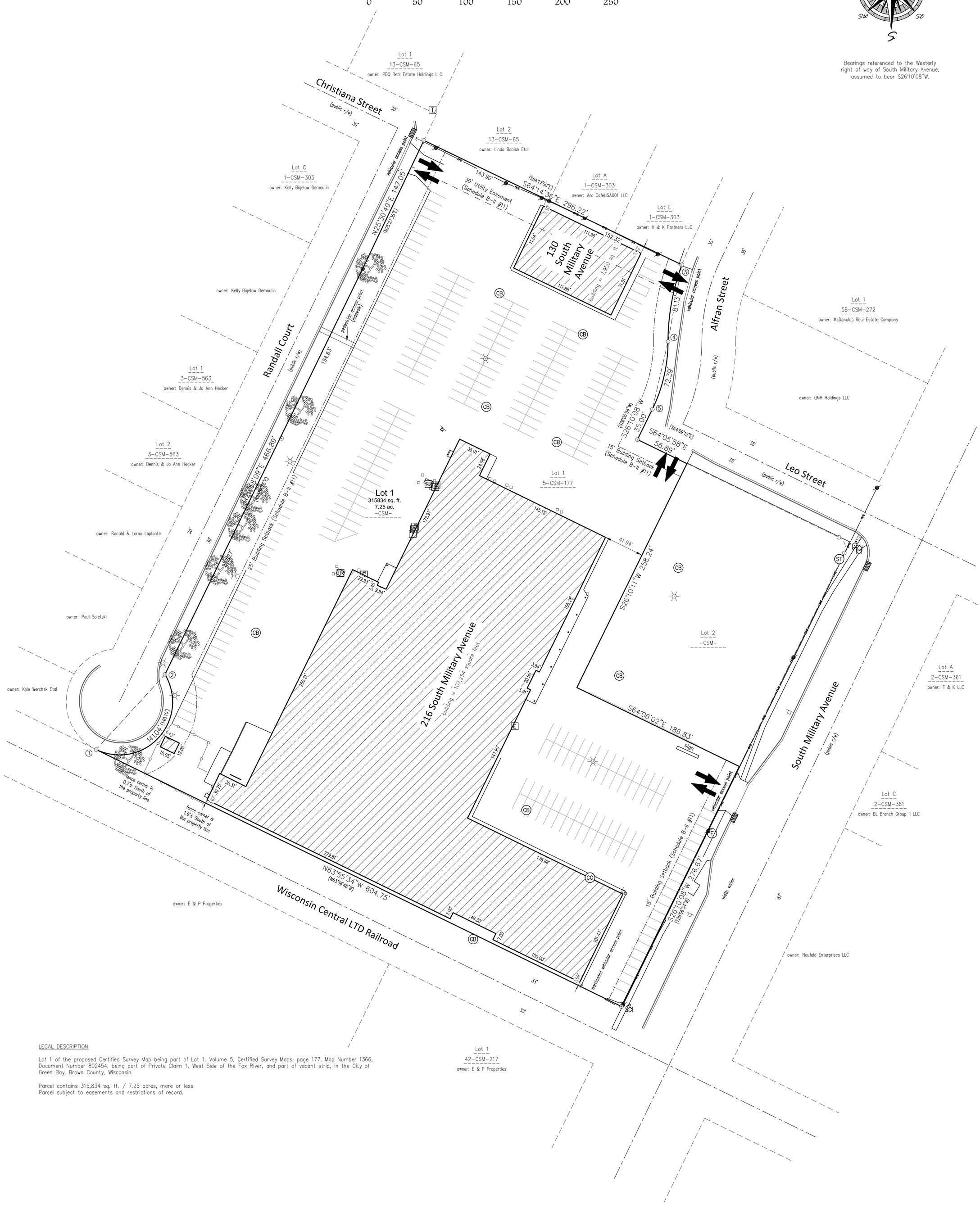


LEGAL DESCRIPTION

Lot 1 of the proposed Certified Survey Map being part of Lot 1, Volume 5, Certified Survey Maps, page 177, Map Number 1366, Document Number 802454, being part of Private Claim 1, West Side of the Fox River, and part of vacant strip, in the City of Green Bay, Brown County, Wisconsin.

Parcel contains 315,834 sq. ft. / 7.25 acres, more or less.
Parcel subject to easements and restrictions of record.

Curve Data

| CURVE | ARC LENGTH | RADIUS | CHORD LENGTH | CHORD BEARING | CENTRAL ANGLE | TANGENT BEARING |
|---|---|---|---|---|---|---|
| 1-2 | 141.04 | 55.00 | 105.45 | N42°28'06"E | 146°55'34" | S64°04'07"W, N30°59'41"W |
| 3-4 | 81.13 | 231.13 | 80.71 | S10°12'48"W | 20°06'42" | S20°16'09"W, S0°09'27"W |
| 4-5 | 72.39 | 161.13 | 71.78 | S13°00'17"W | 25°44'24" | S25°52'29"W, N0°08'05"W |

PROJECT NO. H-1820
SHEET NO. 1 of 1
DRAWING NO. S-

Henry Real Estate Development LLC

File: H-1820PUD 111522.dwg


Mau & Associates, LLP
LAND SURVEYING & PLANNING
CIVIL & WATER RESOURCE ENGINEERING
Phone: 920-434-9670 Website: www.mau-associates.com
400 Security Blvd Ste 1, Green Bay, WI 54313-9712


TAX PARCEL NO. 6-266-E

Planned Unit Development

Data File: H-1820.txt Fieldwork Completed: 02/26/2020

DRAWN BY BAR

SCALE 1"=50'

Exhibit C

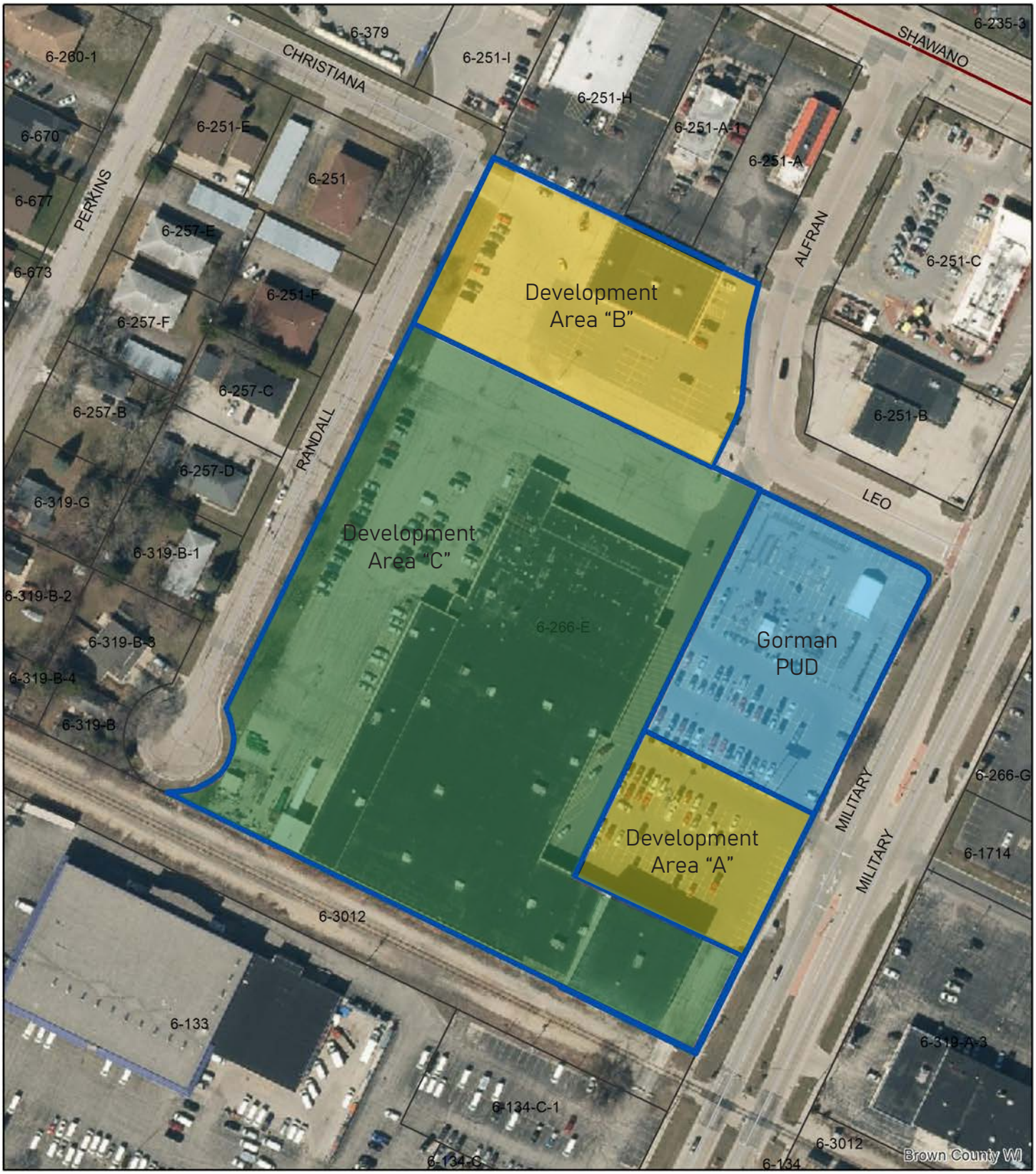


# 216 S Military Ave
# Parcel 6-266-E

Feet
0 50 100 200
N

*This is a compilation of records and data located in various City of Green Bay offices and is to be used for reference purposes only. The City of Green Bay is not responsible for any inaccuracies or unauthorized use of the information contained within. No warranties are implied. Map prepared by City of Green Bay Department of Community and Economic Development. E.R. 19 Jan 2023 X:\Planning\Work Order Requests\2023\23.01 Office Maps\200 Block S Military.mxd*

ZONING ORDINANCE NO. 06-23

AN ORDINANCE
CREATING A PLANNED UNIT DEVELOPMENT (PUD) OVERLAY DISTRICT FOR PART OF 216 SOUTH MILITARY AVENUE (ZP 22-31)

THE COMMON COUNCIL OF THE CITY OF GREEN BAY DOES ORDAIN AS FOLLOWS:

**SECTION 1.** Section 44-30, Green Bay Municipal Code, together with the zoning map referred to therein, is hereby amended by establishing a Planned Unit Development District on the following described property:

Legal Description: Commencing at the Southeast Corner of Lot 1 of Certified Survey Map No. 1366, being part of Private Claim Number 1 and the vacant strip of land, West Side of Fox River, City of Green Bay, Brown County, Wisconsin; thence N26°10'17"E, 276.60 feet along the West right of way of South Military Avenue to the point of beginning; thence N26°10'17"E, 246.18 feet along said west right of way; thence 18.91 feet along the arc of a 12.00 foot radius curve to the left whose chord bears N18°57'46"E from said West right of way of South Military Avenue to the South right of way of Leo Street; thence N64°05'49"E, 174.77 feet along said South right of way of Leo Street; thence S26°10'17"W, 258.24 feet; thence S64°05'49"W, 186.83 feet to the point of beginning.

Tax Parcel: Part of Parcel 6-266-E

**SECTION 2.** Pursuant to Chapter 44, Article XX, Green Bay Municipal Code, as they apply, the following conditions are imposed:

A. Purpose and Intent. The Planned Unit Development (PUD) is being utilized to permit the development and construction of a 48-unit, four-story multi-family residential development. The overall appearance and design of the site and improvements shall comply with the attached Exhibits and as regulated within this PUD.

B. Development Site. Area included within this PUD is proposed as Lot 2 on the accompanying Certified Survey Map (Exhibit A). The existing parcel located at the southwest South Military Avenue and Leo Street will be divided into a separate 1.11 acre/48,215 square feet parcel. The multi-family residential development will be located fronting South Military Avenue have nine total entryways fronting South Military Avenue (8 for individual townhome units and one as a lobby entrance to the building at large.)

C. Land Use Regulation.
The principal and accessory land uses which may be established and/or

maintained on the subject property are as follows:

1. Principal use of 48 residential dwelling units within a single structure. 8 units will have individual unit ingress/egress directly to South Military Avenue. 40 units to have shared access from commonway.

2. Accessory uses customarily associated with multi-family dwelling and supportive housing including lobby, mail room, janitorial services, office space associated with the principal use, bicycle storage, secure parcel holding room, community room, fitness room, office space for community services, and other uses deemed appropriate by the Zoning Administrator.

3. Land use will generally conform with the design of the conceptual site plan (Exhibit B), as determined by the Department of Economic and Community Development.

4. Prohibited Uses. The PUD prohibits certain uses from being established on the site or as accessory to the multi-family dwelling principal use including rooming/boarding houses, shelter facilities, transitional housing, dormitories, assisted living/nursing homes, commercial uses typically associated with dwelling (family daycares and live-work units). All other proposed uses are subject to a PUD amendment.

D. Dimensional and Area Requirements: Dimensional and area requirements or principal structure and surface parking on the subject property shall be regulated as follows:

1. General Site.
   a. Lot Size. Minimum lot area is 48,215 Square Feet / 1.11 acres
   b. Maximum Floor Area Ratio (FAR): 1.0
   c. Maximum Impervious Surface: 86%
2. Building.
   a. Front Yard Setbacks
      1. South Military Avenue: Minimum: 10 feet
         Maximum: 15 feet
      2. Leo Street: Minimum: 7 feet
         Maximum: 15 feet
   b. Side Yard Setback (south lot line): 6 feet
   c. Rear Yard Setback (west lot line): 0 feet
   d. Maximum Height: Principal building shall not exceed 50 feet in height.
3. Surface Parking.
   a. Front Yard Setbacks
      1. Leo Street: 7 feet
      2. South Military Avenue: Not Applicable. No parking shall be located along street.
   b. Side Yard Setback

1. (South lot line): 7 feet

c. Rear Yard Setbacks

1. (West lot line 0 feet

E. Access Circulation and Parking. Access, circulation, and parking within the PUD area shall meet the standards as set forth within Chapter 44, Article XVIII of the Green Bay Municipal Code, and as modified as follows:

1. Pedestrian access shall be provided from South Military Avenue with public sidewalks adjoining the development and connected via an internal pedestrian network to at least one of the public entrances of the principal structure.
2. Access to the site maintained through a shared access easement between Lot 1 (property to west) and Lot 2 (multi-family parcel) (Refer to Exhibit A). Shared access easement must be recorded with the Brown County Register of Deeds prior to the issuance of building permits.

F. Architectural Design. All building elevations shall generally comply with Exhibit C and subject to the following requirements:

a. Four-sided design. All sides of the building shall include materials and design characteristics similar to and compatible with those on the front.
b. Exterior Materials. Building materials shall be durable and appropriate for the residential district as well as being regulated as follows:
c. Exterior building façades shall be predominately (minimum of 90%):
   II. Brick or brick veneer
   III. Cementitious panels/siding
   IV. Architectural/decorative metal panels
   V. Wood or wood composite
   VI. Windows and doors
d. Windows and doors. Windows shall be include trim and all building entrances shall include a canopy or other roofing element over the doorway.
e. A minimum of one public entryway to the principal building must be accessible from South Military Avenue.
f. Accessory structures. Accessory structures are limited to no greater than 16 feet in height and shall match the character of the principal structure, reflected in colors, materials, windows, and architectural features.

G. Lighting. All lighting on the subject property shall be regulated as set forth in Chapter 44, Article V, Division 8, Green Bay Municipal Code.

H. Signage. All signage shall be regulated as set forth in Chapter 30 Green Bay Municipal Code.

DRAFT

I. Site Plan Review & Standards

a. Prior to the issuance of any building permits, site plans shall be submitted and reviewed per Chapter 44 Article XIX, Green Bay Zoning Code.

b. Risers, paved stoops, paved entries leading to private and public doorways along South Military Avenue which are located in the front setback are allowed.

c. Maximum impervious surface requirement is 86% Any paved sidewalk which leads from the public right of way to a public building entrance may be excluded from this calculation.

d. Landscape islands in center of parking lot shall have additional landscaping beyond grass and trees, determined per review by Community and Economic Development.

J. Landscaping/Transitional Yard

a. Prior to the issuance of any building permits, detailed landscape plans shall be submitted and reviewed per Chapter 44, Article XIX, Division 5, Green Bay Municipal Code.

b. Landscape plans shall be in general compliance of the conceptual landscape plans (Exhibit B)

K. Prior to the issuance of any building permits, stormwater management plans, meeting the standards established by the City's Department of Public Works, shall be submitted to and approved by the City.

L. Compliance with all of the regulations of the Green Bay Municipal Code not covered under the PUD.

**SECTION 3.** The provisions of this ordinance, including, without limitation, the granting of a conditional use permit and all obligations, conditions, restrictions, and limitations related thereto shall run with and be jointly and severally binding upon the fee simple owner and the beneficial owner of all or any portion of the subject property.

All obligations, requirements, and rights of the owner shall run with the land and shall automatically be assigned to be binding upon and inure to the benefit of its successors and assigns, including, but not limited to, any entity acquiring any financial interest in the subject property and/or any subsequent owner and/or beneficial owner of all or any portion of the subject property.

**SECTION 4.** Each exhibit which is attached to this ordinance is deemed to be and is expressly made a part of and incorporated into this ordinance to the same extent as if each such exhibit and the plans identified therein had been set forth in its entirety in the body of this ordinance.

**SECTION 5.** All ordinances or parts of ordinances in conflict herewith are hereby

repealed.

**SECTION 6.** In addition to all other remedies available to the City of Green Bay, the City may decline to issue any building or other permits otherwise required by any ordinance of this City while any violation of this ordinance remains uncured.

**SECTION 7.** If any provision in this ordinance is held invalid or unconstitutional by any court of competent jurisdiction, such a decision shall not affect the validity of any other provision of this ordinance. It is hereby declared to be the intention of the City of Green Bay that all provisions of this ordinance are separable.

**SECTION 8.** This ordinance shall not take effect until a public hearing is held thereon as provided by Section 44-82, Green Bay Municipal Code, and the adoption and publication of this ordinance.

Dated at Green Bay, Wisconsin, this _____ day of _____, 2023.

APPROVED:

_____
Mayor Eric Genrich

ATTEST:

_____
Clerk

Attachments:

Exhibit A – Proposed Certified Survey Map
Exhibit B – Conceptual Site Plan-Civil Set-Landscape Plans
Exhibit C – Conceptual Building Elevations

DRAFT

Exhibit C

# CERTIFIED SURVEY MAP
# NO. _____

LOT 1 OF CERTIFIED SURVEY MAP NO. 1366 RECORDED IN VOLUME 5 ON PAGE 177 AS DOCUMENT NO. 802454, BEING PART OF PRIVATE CLAIM NO. 1 AND THE VACANT STRIP OF LAND, WEST SIDE OF FOX RIVER, IN THE CITY OF GREEN BAY, BROWN COUNTY, WISCONSIN

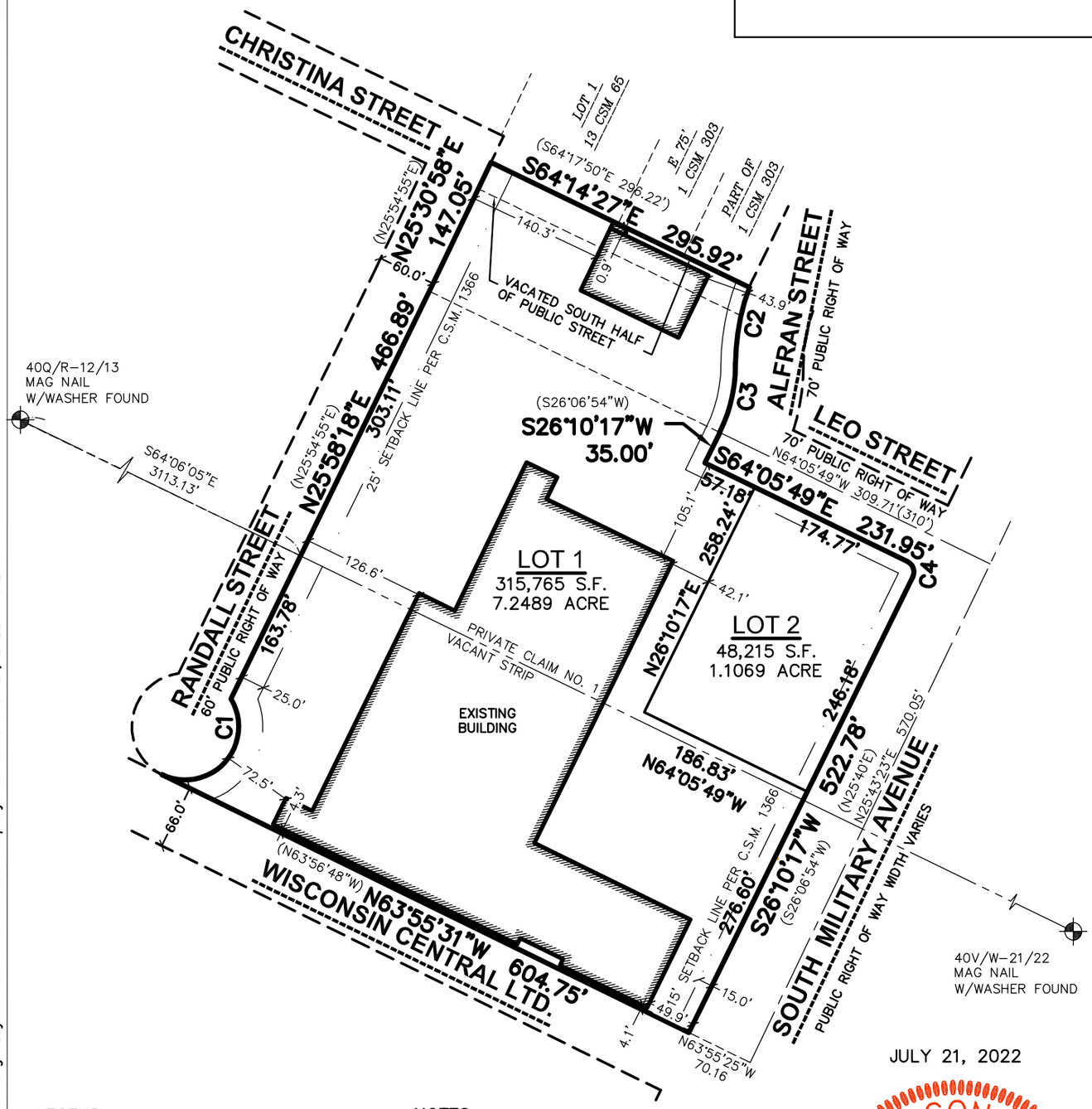


JULY 21, 2022

WISCONSIN
ANDREW W. WILKOWSKI
S-3121
WATERTOWN WI
LAND SURVEYOR

## LEGEND

- GOVERNMENT CORNER
- ¾" REBAR FOUND
- 3/4" x 24" REBAR SET (1.50 LBS/LF)
- PLAT BOUNDARY
- CHORD LINE
- CENTERLINE
- RIGHT-OF-WAY LINE
- PLATTED LOT LINE
- SECTION LINE
- EASEMENT LINE
- SETBACK LINE
- (XXX) RECORDED AS

## NOTES

1. FIELD WORK PERFORMED ON JULY 12, 2022.
2. BEARINGS ARE REFERENCED TO THE WISCONSIN COUNTY COORDINATE SYSTEM, BROWN COUNTY. THE WESTERLY LINE OF S. MILITARY AVE. HAVING A BEARING OF S26°10'17"W.
3. SEE SHEET 2 FOR CURVE TABLE.

THIS INSTRUMENT DRAFTED BY ANDREW W. WILKOWSKI, S-3121

north
0 50 100
SCALE: 1"=100'

| SURVEYED BY: | SURVEYED FOR: | | |
|---|---|---|---|
| JSD<br>WAUSAU REGIONAL OFFICE<br>7402 STONE RIDGE DRIVE, SUITE 4<br>WESTON, WISCONSIN 54476<br>P. 715.298.6330 | HENRY REAL ESTATE DEVEL.<br>200 N. MAIN ST.<br>OREGON, WI 53575 | PROJECT NO: 22-11365<br>FIELDBOOK/PG: –<br>SHEET NO: 1 OF 3 | SURVEYED BY: JSD<br>DRAWN BY: DHS<br>CHECKED BY: AWW<br>APPROVED BY: AWW |

File: N:\PROJECTS\2022\2211365\DWG\Survey Sheets\2211365 CSM.dwg Layout: CSM 1 of 3 User: dspanjar Plotted: Nov 21, 2022 – 8:24am

# CERTIFIED SURVEY MAP NO. _____

**LOT 1 OF CERTIFIED SURVEY MAP NO. 1366 RECORDED IN VOLUME 5 ON PAGE 177 AS DOCUMENT NO. 802454, BEING PART OF PRIVATE CLAIM NO. 1 AND THE VACANT STRIP OF LAND, WEST SIDE OF FOX RIVER, IN THE CITY OF GREEN BAY, BROWN COUNTY, WISCONSIN**

## LEGAL DESCRIPTION

LOT 1 OF CERTIFIED SURVEY MAP NO. 1366 RECORDED IN VOLUME 5 ON PAGE 177 AS DOCUMENT NO. 802454, BEING PART OF PRIVATE CLAIM NO. 1 AND THE VACANT STRIP OF LAND, WEST SIDE OF FOX RIVER, IN THE CITY OF GREEN BAY, BROWN COUNTY, WISCONSIN.

LANDS CONTAINING 363,980 SQUARE FEET OR 8.3558 ACRES.

## SURVEYOR'S CERTIFICATE

I, ANDREW W. WILKOWSKI, PROFESSIONAL LAND SURVEYOR S-3121, DO HEREBY CERTIFY THAT BY DIRECTION OF HENRY REAL ESTATE DEVELOPMENT, LLC, I HAVE SURVEYED, DIVIDED, AND MAPPED THE LANDS DESCRIBED HEREON AND THAT THE MAP IS A CORRECT REPRESENTATION IN ACCORDANCE WITH THE INFORMATION PROVIDED. I FURTHER CERTIFY THAT THIS CERTIFIED SURVEY MAP IS IN FULL COMPLIANCE WITH CHAPTER 236.34 OF THE WISCONSIN STATUTES AND THE SUBDIVISION REGULATIONS OF THE CITY OF GREEN BAY, BROWN COUNTY, WISCONSIN.

WISCONSIN
ANDREW W. WILKOWSKI
S-3121
WATERTOWN WI
LAND SURVEYOR

_____ JULY 21, 2022
ANDREW W. WILKOWSKI, S-3121 — DATE
PROFESSIONAL LAND SURVEYOR

## CORPORATE OWNER'S CERTIFICATE

HENRY REAL ESTATE DEVELOPMENT, LLC, A LIMITED LIABILITY CORPORATION DULY ORGANIZED AND EXISTING UNDER AND BY VIRTUE OF THE LAWS OF THE STATE OF WISCONSIN, AS OWNER, DOES HEREBY CERTIFY THAT SAID CORPORATION HAS CAUSED THE LAND DESCRIBED ON THIS CERTIFIED SURVEY MAP TO BE SURVEYED, DIVIDED AND MAPPED AS REPRESENTED HEREON. SAID CORPORATION FURTHER CERTIFIES THAT THIS CERTIFIED SURVEY MAP IS REQUIRED BY S.236.34, WISCONSIN STATUTES TO BE SUBMITTED TO THE CITY OF GREEN BAY FOR APPROVAL.

IN WITNESS WHEREOF, THE SAID HENRY REAL ESTATE DEVELOPMENT, LLC HAS CAUSED THESE PRESENTS TO BE SIGNED BY ITS REPRESENTATIVE THIS _____DAY OF _____, 2022.

BY: _____
EDWARD MARTIN, PRESIDENT/CEO

STATE OF WISCONSIN) SS
_____ COUNTY) SS

PERSONALLY CAME BEFORE ME THIS_____DAY OF_____, 2022, THE ABOVE NAMED REPRESENTATIVE OF THE ABOVE NAMED HENRY REAL ESTATE DEVELOPMENT, LLC TO ME KNOWN TO BE THE PERSON WHO EXECUTED THE FOREGOING INSTRUMENT, AND ACKNOWLEDGED THE SAME.

_____ _____
NOTARY PUBLIC,_____ COUNTY, WISCONSIN — MY COMMISSION EXPIRES

CURVE TABLE

| CURVE | RADIUS | DELTA | CHORD BEARING | CHORD | ARC LENGTH | TANGENT IN | TANGENT OUT |
|---|---|---|---|---|---|---|---|
| C1 | 55.01' | 146°54'07" | N42°28'06"E | 105.47' | 141.05' | S64°04'51"E | N30°58'58"W |
| C2 | 231.13' | 20°07'46" | S10°13'17"W | 80.78' | 81.20' | S20°17'10"W | S00°09'24"W |
| C3 | 161.13' | 25°44'24" | S13°00'26"W | 71.78' | 72.39' | S25°52'38"W | S00°08'14"W |
| C4 | 12.00' | 90°16'06" | S18°57'46"E | 17.01' | 18.91' | S26°10'17"W | S64°05'49"E |

THIS INSTRUMENT DRAFTED BY ANDREW W. WILKOWSKI, S-3121

SURVEYED BY:
JSD
WAUSAU REGIONAL OFFICE
7402 STONE RIDGE DRIVE, SUITE 4
WESTON, WISCONSIN 54476
P. 715.298.6330

SURVEYED FOR:
**HENRY REAL ESTATE DEVEL.**
200 N MAIN ST
OREGON, WI 53575

| | | | |
|---|---|---|---|
| PROJECT NO: | 22-11365 | SURVEYED BY: | JSD |
| FIELDBOOK/PG: | - | DRAWN BY: | DHS |
| SHEET NO: | 2 OF 3 | CHECKED BY: | AWW |
| | | APPROVED BY: | AWW |

File: N:\PROJECTS\2022\2211365\DWG\Survey Sheets\2211365 CSM.dwg Layout: CSM 2 of 3 User: dspanjar Plotted: Nov 21, 2022 - 8:28am

# CERTIFIED SURVEY MAP NO. _____

**LOT 1 OF CERTIFIED SURVEY MAP NO. 1366 RECORDED IN VOLUME 5 ON PAGE 177 AS DOCUMENT NO. 802454, BEING PART OF PRIVATE CLAIM NO. 1 AND THE VACANT STRIP OF LAND, WEST SIDE OF FOX RIVER, IN THE CITY OF GREEN BAY, BROWN COUNTY, WISCONSIN**

## CONSENT OF CORPORATE MORTGAGEE

WISCONSIN BANK & TRUST, A CORPORATION DULY ORGANIZED AND EXISTING UNDER AND BY VIRTUE OF THE LAWS OF THE STATE OF WISCONSIN, AS MORTGAGEE OF THE LANDS DESCRIBED HEREON, HEREBY CONSENTS TO THE SURVEYING, DIVIDING, MAPPING AND RESTRICTING OF THE LANDS DESCRIBED IN THE AFFIDAVIT OF ANDREW W. WILKOWSKI, WISCONSIN PROFESSIONAL LAND SURVEYOR, S-3121, AND DO HEREBY CONSENT TO THE ABOVE CERTIFICATE OF HENRY REAL ESTATE DEVELOPMENT, LLC, OWNER.

WITNESS THE HAND AND SEAL OF WISCONSIN BANK & TRUST, MORTGAGEE, THIS___DAY OF_____, 2022.

_____
CRAIG D. ADERHOLD,
MARKET PRESIDENT-NORTHEAST WISCONSIN

STATE OF WISCONSIN) SS
_____ COUNTY) SS

PERSONALLY CAME BEFORE ME THIS____DAY OF_____, 2022, THE ABOVE NAMED REPRESENTATIVE OF THE ABOVE NAMED WISCONSIN BANK & TRUST, TO ME KNOWN TO BE THE PERSON WHO EXECUTED THE FOREGOING INSTRUMENT, AND ACKNOWLEDGED THE SAME.

_____ _____
NOTARY PUBLIC, _____ COUNTY, WISCONSIN MY COMMISSION EXPIRES

## CITY OF GREEN BAY PLAN COMMISSION APPROVAL

APPROVED FOR RECORDING PER CITY OF GREEN BAY PLAN COMMISSION ACTION OF_____,2022.

_____ _____
DATE

CITY OF GREEN BAY

## CITY OF GREEN BAY COMMON COUNCIL APPROVAL CERTIFICATE

RESOLVED THAT THIS CERTIFIED SURVEY MAP, WHICH HAS BEEN DULY FILED FOR THE APPROVAL OF THE CITY OF GREEN BAY COMMON COUNCIL, BE AND THE SAME IS HEREBY APPROVED AND THE DEDICATIONS, IF ANY DESIGNATED HEREON, ARE HEREBY ACKNOWLEDGED AND ACCEPTED BY THE CITY OF GREEN BAY.

I HEREBY CERTIFY THAT THE ABOVE IS A TRUE AND CORRECT COPY OF A RESOLUTION ADOPTED BY THE CITY OF GREEN BAY ON THIS_____DAY OF_____, 2022.

_____
CELESTINE JEFFREYS, CLERK
CITY OF GREEN BAY

JULY 21, 2022

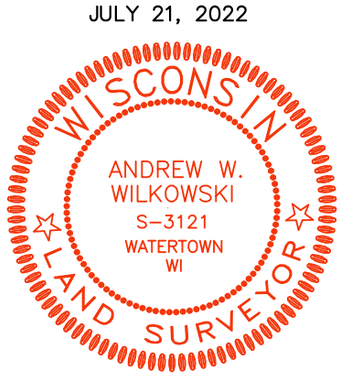


THIS INSTRUMENT DRAFTED BY ANDREW W. WILKOWSKI, S-3121

| SURVEYED BY: | SURVEYED FOR: | | | |
|---|---|---|---|---|
| JSD<br>WAUSAU REGIONAL OFFICE<br>7402 STONE RIDGE DRIVE, SUITE 4<br>WESTON, WISCONSIN 54476<br>P. 715.298.6330 | HENRY REAL ESTATE DEVEL<br>200 N MAIN ST<br>OREGON, WI 53575 | PROJECT NO: 22-11365<br>FB/PG: -<br>SHEET NO: 3 OF 3 | SURVEYED BY: JSD<br>DRAWN BY: DHS<br>CHECKED BY: AWW<br>APPROVED BY: AWW | |

File: N:\PROJECTS\2022\2211365\DWG\Survey Sheets\2211365 CSM.dwg Layout: CSM 3 of 3 User: dspanjar Plotted: Nov 21, 2022 - 8:28am

Exhibit B

# ALTA/NSPS LAND TITLE SURVEY

BEING PART OF PRIVATE CLAIM 1 WEST AND LANDS WEST OF THE FOX RIVER, IN THE CITY OF GREEN BAY, BROWN COUNTY, WISCONSIN.

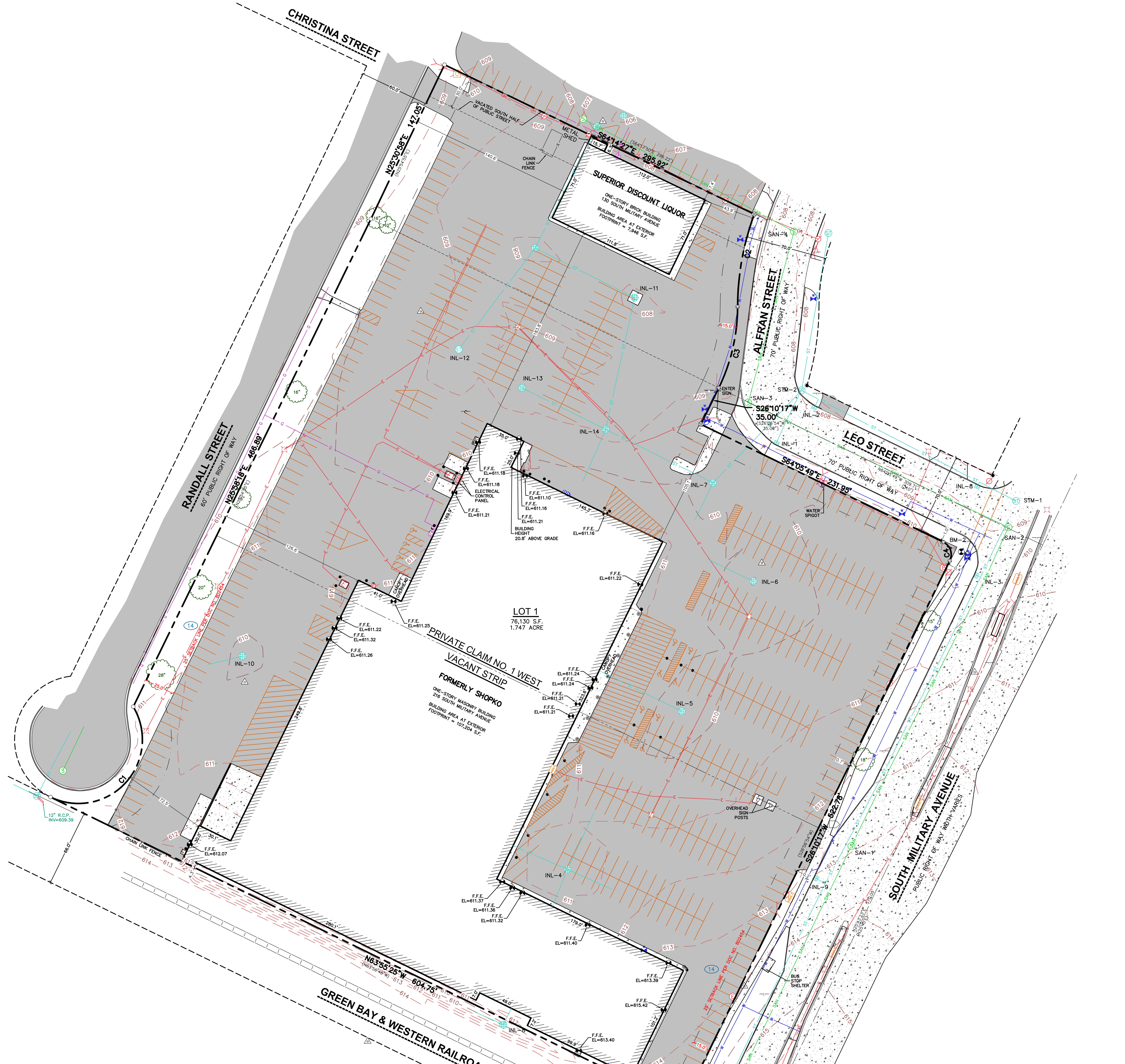


## NOTES

1. FIELD WORK PERFORMED BY JSD PROFESSIONAL SERVICES, INC. ON JULY 1, 2022.
2. BEARINGS FOR THIS SURVEY AND MAP ARE REFERENCED TO THE WISCONSIN COUNTY COORDINATE SYSTEM, BROWN COUNTY. THE WESTERLY LINE OF S. MILITARY AVE. HAVING A BEARING OF S26°10'17"W.
3. ELEVATIONS ARE BASED ON THE NORTH AMERICAN VERTICAL DATUM OF 1988 (NAVD88). BENCHMARK IS A NGS MONUMENT P.I.D NO. PN0092, ELEVATION=583.69
4. CONTOUR INTERVAL IS ONE FOOT.
5. SPOT ELEVATIONS IN CURBED AREAS REFERENCE THE PAVEMENT EDGE ELEVATIONS.
6. SUBSURFACE UTILITIES AND FEATURES SHOWN ON THIS MAP HAVE BEEN APPROXIMATED BY LOCATING SURFICIAL FEATURES AND APPURTENANCES, LOCATING DIGGERS HOTLINE FIELD MARKINGS AND BY REFERENCE TO UTILITY RECORDS AND MAPS. DIGGER'S HOTLINE TICKET NO. 20222608196 & 20222608226, WITH A CLEAR DATE OF JUNE 24, 2022.
7. UTILITY COMPANIES CONTACTED THRU DIGGERS HOTLINE:
   - BROWN COUNTY TECHNOLOGY SERVICES
   - CITY OF GREEN BAY (DPW)
   - CITY OF GREEN BAY
   - NET LEC
   - AT&T DISTRIBUTION
   - TDS METROCOM
   - TIME WARNER CABLE
   - WISCONSIN PUBLIC SERVICE CORP
8. BEFORE EXCAVATION, APPROPRIATE UTILITY COMPANIES SHOULD BE CONTACTED. FOR EXACT LOCATION OF UNDERGROUND UTILITIES, CONTACT DIGGERS HOTLINE, AT 1.800.242.8511.
9. THE ACCURACY OF THE BENCHMARKS SHOWN ON THIS MAP SHALL BE VERIFIED BEFORE BEING UTILIZED. JSD PROFESSIONAL SERVICES, INC. DOES NOT WARRANT THE ACCURACY OF THESE BENCHMARKS.
10. THIS PARCEL IS SUBJECT TO ALL EASEMENTS AND AGREEMENTS, BOTH RECORDED AND UNRECORDED.

## NOTES CORRESPONDING TO TABLE A REQUIREMENTS:

**ITEM 3** THE SUBJECT PROPERTY LIES IN ZONE X PER FEMA MAP NUMBERS 550090164F & 55009C0168F, WHICH HAS EFFECTIVE DATES OF AUGUST 18, 2009.

**ITEM 6(a)(b)** CURRENT ZONING CLASSIFICATION WAS REQUESTED BUT NOT PROVIDED BY THE INSURER AT THE TIME OF THE SURVEY.

**ITEM 9** THERE ARE 420 REGULAR PARKING SPACES AND 13 HANDICAP SPACES FOR A TOTAL OF 433 PARKING SPACES.

**ITEM 11** NOTE TO THE CLIENT, INSURER, AND LENDER – WITH REGARD TO TABLE A, ITEM 11, INFORMATION FROM THE SOURCES CHECKED ABOVE WILL BE COMBINED WITH OBSERVED EVIDENCE OF UTILITIES PURSUANT TO SECTION 5.E.IV. TO DEVELOP A VIEW OF THE UNDERGROUND UTILITIES. HOWEVER, LACKING EXCAVATION, THE EXACT LOCATION OF UNDERGROUND FEATURES CANNOT BE ACCURATELY, COMPLETELY, AND RELIABLY DEPICTED. IN ADDITION, IN SOME JURISDICTIONS, 811 OR OTHER SIMILAR UTILITY LOCATE REQUESTS FROM SURVEYORS MAY BE IGNORED OR RESULT IN AN INCOMPLETE RESPONSE, IN WHICH CASE THE SURVEYOR SHALL NOTE ON THE PLAT OR MAP HOW THIS AFFECTED THE SURVEYOR'S ASSESSMENT OF THE LOCATION OF THE UTILITIES. WHERE ADDITIONAL OR MORE DETAILED INFORMATION IS REQUIRED, THE CLIENT IS ADVISED THAT EXCAVATION MAY BE NECESSARY.

**ITEM 16** THERE IS NO OBSERVED EVIDENCE OF CURRENT EARTH MOVING WORK, BUILDING CONSTRUCTION OR BUILDING ADDITIONS AT THE TIME OF THIS SURVEY.

**ITEM 17** THERE ARE NO PROPOSED CHANGES IN THE STREET RIGHT-OF-WAY LINES. THERE IS NO OBSERVED EVIDENCE OF RECENT STREET OR SIDEWALK CONSTRUCTION OR REPAIRS AT THE TIME OF THE SURVEY.

**ITEM 18** THERE ARE NO OFFSITE EASEMENTS FOR THE SUBJECT PROPERTY.

## NOTES CORRESPONDING TO SCHEDULE B-SECTION TWO EXCEPTIONS

KNIGHT BARRY TITLE GROUP, FILE NO.: 2128568, COMMITMENT DATE: FEBRUARY 16, 2022 AT 8:00 A.M., REVISED FEBRUARY 24, 2022.

14 EASEMENTS, RESTRICTIONS AND OTHER MATTERS SHOWN ON CERTIFIED SURVEY MAP NO. NO. 1366 RECORDED DECEMBER 18, 1974 AS DOCUMENT NO. 802454.
AFFECTS PROPERTY AS PLOTTED HEREON

15 ORDER AND OTHER MATTERS CONTAINED IN THE INSTRUMENT RECORDED FEBRUARY 2, 1983 AS DOCUMENT NO. 992278..
AFFECTS PROPERTY BY DESCRIPTION – RELEASE OF RIGHTS VAGUE IN NATURE, NOTHING PLOTTED

## LEGAL DESCRIPTION (AS FURNISHED)

KNIGHT BARRY TITLE GROUP, FILE No.: 2128568, COMMITMENT DATE: FEBRUARY 16, 2022 AT 8:00 A.M., REVISED FEBRUARY 24, 2022.

LOT 1 OF VOLUME 5 CERTIFIED SURVEY MAPS, PAGE 177, MAP NUMBER 1366, DOCUMENT NO. 802454, BEING PART OF PRIVATE CLAIM 1 WEST AND PART OF VACANT STRIP IN THE CITY OF GREEN BAY, WEST SIDE OF FOX RIVER, BROWN COUNTY, WISCONSIN.

FOR INFORMATIONAL PURPOSES ONLY:
PROPERTY ADDRESS: 216 SOUTH MILITARY AVENUE, GREEN BAY, WI
TAX KEY NUMBER: 6-266-E

## SURVEYOR'S CERTIFICATE

TO:
i) GORMAN & COMPANY,
ii) KNIGHT BARRY TITLE, INC,
iii) MARTIN NEUFELD, LLC, A WISCONSIN LIMITED LIABILITY COMPANY,

THIS IS TO CERTIFY THAT THIS MAP OR PLAT AND THE SURVEY ON WHICH IT IS BASED WERE MADE IN ACCORDANCE WITH THE 2021 MINIMUM STANDARD DETAIL REQUIREMENTS FOR ALTA/NSPS LAND TITLE SURVEYS, JOINTLY ESTABLISHED AND ADOPTED BY ALTA AND NSPS AND INCLUDES ITEMS 1, 2, 3, 4, 5, 6(a), 7(a)(b)(1)(c), 8, 9, 11, 13, 16, 17, 18 & 19 OF TABLE A THEREOF. THE FIELD WORK WAS COMPLETED ON JULY 1, 2022.


ANDREW W. WILKOWSKI, S-3121
PROFESSIONAL LAND SURVEYOR
Email: andy.wilkowski@jsdinc.com
Website: www.jsdinc.com


JULY 12, 2022
DATE

WISCONSIN ANDREW W. WILKOWSKI S-3121 WATERTOWN WI LAND SURVEYOR

## LEGEND

- CHISELED 'X' SET
- MAG NAIL SET
- 3/4" x 24" REBAR SET (1.50 LBS/LF)
- CHISELED 'X' FOUND
- 1" IRON PIPE FOUND
- PK/MAG NAIL FOUND
- ¾" REBAR FOUND
- CONTROL POINT
- FINISHED FLOOR SHOT LOCATION
- BOLLARD
- MAIL BOX
- POST
- SIGN
- SANITARY MANHOLE
- HYDRANT
- WATER VALVE
- CURB STOP/SERVICE VALVE
- SIAMESE CONNECTOR
- STORM MANHOLE
- ROUND CASTED INLET
- SQUARE CASTED INLET
- CURB INLET
- DOWNSPOUT
- GAS REGULATOR/METER
- GAS VALVE
- MANHOLE – UNVERIFIED TYPE
- ELECTRIC MANHOLE
- ELECTRIC PEDESTAL
- ELECTRIC METER
- ELECTRIC TRANSFORMER
- LIGHT POLE
- POWER POLE
- POWER POLE W/GUY
- TRAFFIC SIGNAL
- VAULT
- CABLE PEDESTAL
- DECIDUOUS TREE
- HANDICAP PARKING
- CENTERLINE
- RIGHT-OF-WAY LINE
- SETBACK LINE
- SECTION LINE
- PARCEL BOUNDARY
- PROPERTY LINE
- EASEMENT LINE
- LANDSCAPE LIMITS
- X X FENCE LINE
- EDGE OF PAVEMENT
- CONCRETE CURB & GUTTER
- SAN SANITARY SEWER
- W WATER LINE
- ST STORM SEWER
- G NATURAL GAS
- OH OVERHEAD LINE
- E UNDERGROUND ELECTRIC
- FO FIBER OPTIC
- T UNDERGROUND TELEPHONE
- BUILDING
- 875 INDEX CONTOUR
- 874 INTERMEDIATE CONTOUR
- x874.29 SPOT ELEVATION
- BITUMINOUS PAVEMENT
- CONCRETE PAVEMENT
- EDGE OF BITUMINOUS
- PAVEMENT STRIPING
- ( ) DENOTES RECORD DATA DEPICTING THE SAME LINE ON THE GROUND AS RETRACED BY THIS SURVEY

### STORM SEWER INLETS

| INLET ID | RIM ELEVATION | INVERT | ELEVATION | PIPE SIZE | PIPE TYPE |
|---|---|---|---|---|---|
| INL-1 | 608.38 | NE | 605.63 | 12" | C.M.P. |
| | | SW | 605.83 | 6" | P.V.C. |
| INL-2 | 607.71 | NE | 605.01 | 12" | R.C.P. |
| INL-3 | 609.29 | NE | 601.69 | 54" | R.C.P. |
| | | SW | 601.79 | 54" | R.C.P. |
| INL-4 | 610.04 | NE | 606.52 | 8" | P.V.C. |
| | | SW | 606.39 | 8" | P.V.C. |
| | | NW | 606.29 | 3" | P.V.C. |
| | | SE | 602.94 | 6" | P.V.C. |
| INL-5 | 609.31 | NW | 606.37 | 6" | P.V.C. |
| INL-6 | 608.94 | NW | 606.14 | 10" | P.V.C. |
| INL-7 | 609.26 | SE | 605.18 | 18" | R.C.P. |
| | | SW | 605.19 | 24" | R.C.P. |
| | | NE | 605.17 | 12" | R.C.P. |
| INL-8 | 608.19 | NE | 604.29 | 9" | R.C.P. |
| INL-9 | 613.03 | SE | 607.63 | 12" | R.C.P. |
| INL-10 | 609.73 | NW | 606.94 | 10" | P.V.C. |
| INL-11 | 607.60 | NW | 604.80 | 10" | P.V.C. |
| INL-12 | 608.59 | NE | 606.64 | 10" | P.V.C. |
| INL-13 | 608.46 | SW | 605.61 | 10" | METAL |
| INL-14 | 608.63 | N | 605.53 | 8" | P.V.C. |
| | | NW | 605.78 | 8" | P.V.C. |
| | | SE | 605.33 | 18" | P.V.C. |
| | | SW | 605.33 | 15" | P.V.C. |
| INL-7 | 607.72 | SE | 604.12 | 12" | R.C.P. |
| | | SW | 604.04 | 10" | R.C.P. |
| | | NE | 603.77 | 10" | R.C.P. |
| INL-8 | 609.74 | NE | 607.95 | 10" | R.C.P. |
| | | SW | 607.90 | 10" | R.C.P. |

### SANITARY SEWER MANHOLES

| STRUCT. ID | RIM ELEVATION | INVERT | ELEVATION | PIPE SIZE | PIPE TYPE |
|---|---|---|---|---|---|
| SAN-1 | 612.83 | NE | 599.13 | 15" | P.V.C. |
| | | SW | 599.33 | 15" | P.V.C. |
| SAN-2 | 608.93 | NE | 598.01 | 18" | P.V.C. |
| | | SW | 598.35 | 18" | P.V.C. |
| | | NW | 598.93 | 8" | P.V.C. |
| | | SE | 598.73 | 8" | P.V.C. |
| SAN-3 | 608.52 | NE | 599.84 | 8" | P.V.C. |
| | | SE | 599.86 | 8" | P.V.C. |
| SAN-4 | 608.18 | NW | 600.21 | 8" | P.V.C. |
| | | SW | 600.21 | 8" | P.V.C. |

### STORM SEWER MANHOLES

| STRUCT. ID | RIM ELEVATION | INVERT | ELEVATION | PIPE SIZE | PIPE TYPE |
|---|---|---|---|---|---|
| STM-1 | 608.66 | NE | 601.82 | 56" | R.C.P. |
| | | SW | 602.02 | 56" | R.C.P. |
| | | SE | 602.01 | 24" | R.C.P. |
| | | NW | 602.11 | 20"X36" | R.C.P.A. |
| STM-2 | 608.48 | SE | 604.23 | 20"X36" | R.C.P.A. |
| | | SW | 604.28 | 24" | R.C.P. |
| | | NE | 604.66 | 12" | R.C.P. |

### CURVE TABLE

| CURVE | RADIUS | DELTA | CHORD BEARING | CHORD | ARC LENGTH | TANGENT IN | TANGENT OUT |
|---|---|---|---|---|---|---|---|
| C1 | 55.00' | 146°55'34" | N42°28'15"E | 105.45' | 141.04' | S64°03'58"E | N30°59'32"W |
| C2 | 231.13' | 20°07'46" | S10°13'17"W | 80.78' | 81.20' | S20°17'10"W | S00°09'24"W |
| C3 | 161.13' | 25°44'24" | S13°00'26"W | 71.78' | 72.39' | S25°52'38"W | S00°08'14"W |
| C4 | 12.00' | 90°16'06" | S18°57'46"E | 17.01' | 18.91' | S26°10'17"W | S64°05'49"E |

### BENCHMARKS

| BENCH MARK | ELEVATION | DESCRIPTION |
|---|---|---|
| BM-1 | 617.57 | CROSS ON NORTHERLY FLANGE NUT, HYDRANT |
| BM-2 | 611.77 | CROSS ON SOUTHERLY FLANGE NUT, HYDRANT |

*JSD DOES NOT GUARANTEE THE BENCHMARK ELEVATIONS LISTED ON THIS MAP ARE ACCURATE AND SHOULD BE VERIFIED PRIOR TO CONSTRUCTION ACTIVITIES.


JSD
CREATE THE VISION TELL THE STORY
jsdinc.com
WAUSAU REGIONAL OFFICE
7402 STONE RIDGE DRIVE, SUITE 4
WESTON, WI 54476
P. 715.298.6330


CLIENT:
**GORMAN & COMPANY**

CLIENT ADDRESS:
**200 NORTH MAIN STREET OREGON, WI 53575**

PROJECT:
**SO. MILITARY AVENUE**

PROJECT LOCATION:
**216 SOUTH MILITARY AVENUE GREEN BAY, WI BROWN COUNTY**

north
SCALE IN FEET
40' 0 40'

TO OBTAIN LOCATIONS OF PARTICIPANT UNDERGROUND FACILITIES BEFORE YOU DIG IN WISCONSIN
CALL DIGGERS HOTLINE
1-800-242-8511 TOLL FREE
WISCONSIN STATE STATUTE 182.0175(1974) REQUIRES MINIMUM THREE (3) WORK DAYS NOTICE BEFORE YOU EXCAVATE

"THE INFORMATION SHOWN ON THIS DRAWING CONCERNING TYPE AND LOCATION OF UNDERGROUND UTILITIES IS NOT GUARANTEED TO BE ACCURATE OR ALL INCLUSIVE. THE CONTRACTOR IS RESPONSIBLE FOR MAKING THE CONTRACTOR'S OWN DETERMINATIONS AS TO THE TYPE AND LOCATION OF UNDERGROUND UTILITIES AS MAY BE NECESSARY TO AVOID DAMAGE THERETO."

MODIFICATIONS:

| # | Date: | Description: |
|---|---|---|
| 1 | | |
| 2 | | |
| 3 | | |
| 4 | | |
| 5 | | |
| 6 | | |
| 7 | | |
| 8 | | |
| 9 | | |
| 10 | | |
| 11 | | |
| 12 | | |
| 13 | | |
| 14 | | |
| 15 | | |

Designed By: DHS 7/12/22
Reviewed By: AWW 7/12/22
Approved By: AWW 7/12/22

SHEET TITLE:
**ALTA/NSPS LAND TITLE SURVEY**

SHEET NUMBER:
**C0.0**

PROJECT NO: 22-11365


THESE PLANS AND DESIGNS ARE COPYRIGHT PROTECTED AND MAY NOT BE USED IN WHOLE OR IN PART WITHOUT THE WRITTEN CONSENT OF JSD PROFESSIONAL SERVICES, INC.



File: N:\PROJECTS\2022\2211365\DWG\Survey Sheets\2211365 ALTA.dwg Layout: SHEET 1 User: dspanjar Plotted: Jul 13, 2022 - 8:34am Xrefs:

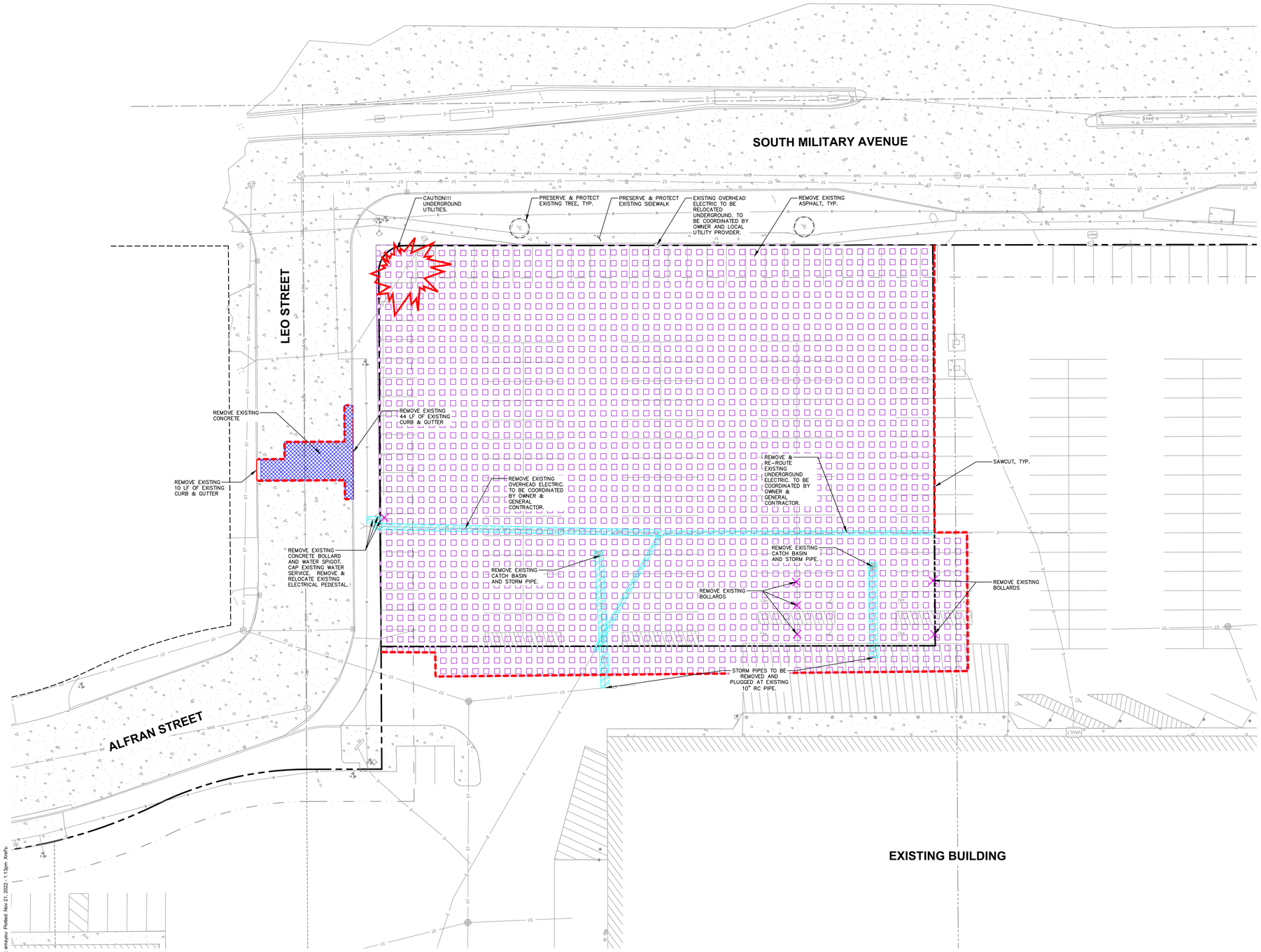


## DEMOLITION NOTES

1. THIS PLAN INDICATES ITEMS ON THE PROPERTY INTENDED FOR DEMOLITION BASED ON THE CURRENT SITE DESIGN THAT HAVE BEEN IDENTIFIED BY A REASONABLE OBSERVATION OF THE EXISTING CONDITIONS THROUGH FIELD SURVEY RECONNAISSANCE, "DIGGER'S HOTLINE" LOCATION, AND GENERAL "STANDARD OF CARE". THERE MAY BE ADDITIONAL ITEMS THAT CAN NOT BE IDENTIFIED BY A REASONABLE ABOVE GROUND OBSERVATION, OF WHICH THE ENGINEER WOULD HAVE NO KNOWLEDGE OR MAY BE A PART OF ANOTHER DESIGN DISCIPLINE. IT IS THE CONTRACTOR'S/BIDDER'S RESPONSIBILITY TO REVIEW THE PLANS, INSPECT THE SITE AND PROVIDE THEIR OWN DUE DILIGENCE TO INCLUDE IN THEIR BID WHAT ADDITIONAL ITEMS, IN THEIR OPINION, MAY BE NECESSARY FOR DEMOLITION. ANY ADDITIONAL ITEMS IDENTIFIED BY THE CONTRACTOR/BIDDER SHALL BE IDENTIFIED IN THE BID AND REPORTED TO THE ENGINEER OF RECORD. JSD TAKES NO RESPONSIBILITY FOR ITEMS ON THE PROPERTY THAT COULD NOT BE LOCATED BY A REASONABLE OBSERVATION OF THE PROPERTY OR OF WHICH THEY WOULD HAVE NO KNOWLEDGE.
2. CONTRACTOR SHALL KEEP ALL STREETS AND PRIVATE DRIVES FREE AND CLEAR OF ALL CONSTRUCTION RELATED DIRT, DUST AND DEBRIS.
3. ALL TREES WITHIN THE CONSTRUCTION LIMITS SHALL BE REMOVED UNLESS SPECIFICALLY CALLED OUT FOR PROTECTION. ALL TREES TO BE REMOVED SHALL BE REMOVED IN THEIR ENTIRETY AND STUMPS SHALL BE GROUND TO PROPOSED SUBGRADE.
4. ALL LIGHT POLES TO BE REMOVED SHALL BE REMOVED IN THEIR ENTIRETY, INCLUDING BASE AND ALL APPURTENANCES. SALVAGE FOR RELOCATION. COORDINATE RELOCATION AND/OR ABANDONMENT OF ALL ELECTRIC LINES WITH ELECTRICAL ENGINEER AND OWNER PRIOR TO DEMOLITION.
5. ABANDONED/REMOVED ITEMS SHALL BE DISPOSED OF OFF SITE UNLESS OTHERWISE NOTED.
6. CONTRACTOR TO REPLACE ALL SIDEWALK AND CURB AND GUTTER ABUTTING THE PROPERTIES, WHICH IS DAMAGED BY THE CONSTRUCTION, OR ANY SIDEWALK AND CURB AND GUTTER THAT THE CITY ENGINEER DETERMINES NEEDS TO BE REPLACED BECAUSE IT IS NOT AT A DESIRABLE GRADE REGARDLESS OF WHETHER THE CONDITION EXISTED PRIOR TO BEGINNING CONSTRUCTION.
7. PRIOR TO CONSTRUCTION, THE CONTRACTOR IS RESPONSIBLE FOR:
   - 7.1. EXAMINE ALL SITE CONDITIONS RELATIVE TO THE CONDITIONS INDICATED ON THE ENGINEERING DRAWINGS. ANY DISCREPANCIES ARE TO BE REPORTED IMMEDIATELY TO THE ENGINEER AND RESOLVED PRIOR TO THE START OF CONSTRUCTION.
   - 7.2. VERIFYING UTILITY ELEVATIONS AND NOTIFYING ENGINEER OF ANY DISCREPANCIES. NO WORK SHALL BE PERFORMED UNTIL THE DISCREPANCIES ARE RESOLVED.
   - 7.3. NOTIFYING ALL UTILITIES PRIOR TO THE REMOVAL OF ANY UNDERGROUND UTILITIES.
   - 7.4. NOTIFYING THE DESIGN ENGINEER AND LOCAL CONTROLLING MUNICIPALITY 48 HOURS PRIOR TO THE START OF CONSTRUCTION TO ARRANGE FOR APPROPRIATE CONSTRUCTION INSPECTION.
8. ANY SANITARY SEWER, SANITARY SEWER SERVICES, WATER MAIN, WATER SERVICES, STORM SEWER, OR OTHER UTILITIES, WHICH ARE DAMAGED BY THE CONTRACTORS, SHALL BE REPAIRED TO THE OWNER'S SATISFACTION AT THE CONTRACTOR'S EXPENSE.
9. CONTRACTOR IS RESPONSIBLE FOR SITE SAFETY DURING THE CONSTRUCTION OF THESE IMPROVEMENTS.
10. CONTRACTOR TO COORDINATE PRIVATE UTILITY REMOVAL / ABANDONMENT AND NECESSARY RELOCATION WITH RESPECTIVE UTILITY COMPANY. COORDINATION REQUIRED PRIOR TO CONSTRUCTION.
11. ALL DEMOLITION SHALL BE IN ACCORDANCE WITH THE APPROVED MUNICIPALITY RECYCLING PLAN.
12. ANY CONTAMINATED SOILS SHALL BE REMOVED IN ACCORDANCE WITH FEDERAL AND STATE REGULATIONS TO AN APPROVED LANDFILL.
13. ALL EXISTING UTILITIES TO BE FIELD LOCATED AND FLAGGED BY CONTRACTOR.
14. SEWER ABANDONMENT SHALL BE IN ACCORDANCE WITH SECTION 3.2.24, OF THE STANDARD SPECIFICATIONS FOR WATER AND SEWER CONSTRUCTION IN WISCONSIN, LATEST ADDITION, AND CITY OF GREEN BAY SPECIFICATIONS.
15. WATER ABANDONMENT SHALL BE IN ACCORDANCE WITH SECTION 4.14.0 OF THE STANDARD SPECIFICATIONS FOR WATER AND SEWER CONSTRUCTION IN WISCONSIN, LATEST ADDITION, AND CITY OF GREEN BAY SPECIFICATIONS.
16. ALL PERIMETER EROSION CONTROL DEVICES SHALL BE INSTALLED PRIOR TO THE START OF DEMOLITION ACTIVITIES. CONTRACTOR SHALL KEEP ALL STREETS AND PAVEMENT FREE AND CLEAR OF ALL CONSTRUCTION RELATED DIRT, DUST AND DEBRIS.
17. CONTRACTOR TO REMOVE EXISTING UTILITY PIPE OR PROVIDE PIPE BACK-FILLING AFTER REMOVAL OF EXISTING UTILITIES WITHIN BUILDING FOOTPRINT USING "LOW DENSITY CONCRETE/FLOWABLE FILL".
18. RESTORATION OF THE EXISTING ROADWAY RIGHT-OF-WAYS ARE CONSIDERED INCIDENTAL AND SHOULD BE PART OF THE COST OF THE UNDERGROUND IMPROVEMENTS, DEMOLITION AND REMOVAL. THIS INCLUDES CURB & GUTTER, SIDEWALK, TOPSOIL, SEEDING AND MULCHING.

## LEGEND

- PROPERTY LINE
- RIGHT-OF-WAY
- EASEMENT LINE
- DEMOLITION – REMOVAL OF ONSITE CURB SURFACES AND BASE COURSE
- DEMOLITION – REMOVAL OF ASPHALT SURFACES
- DEMOLITION – REMOVAL OF CONCRETE SURFACES
- DEMOLITION – REMOVAL OF UTILITIES
- REMOVAL
- SAWCUT EXISTING PAVEMENT
- PROTECT EXISTING TREE

KORB + ASSOCIATES ARCHITECTS

JSD

PROJECT:
BAY CITY LOFTS
216 S. MILITARY AVE.
GREEN BAY, WI

OWNER:
GORMAN & COMPANY
200 N Main Street
Oregon, WI 53575

ARCHITECT:
KORB + ASSOCIATES ARCHITECTS
648 N. PLANKINTON AVE
SUITE 240
MILWAUKEE, WI 53203

CIVIL ENGINEER:
JSD PROFESSIONAL SERVICES, INC.
7402 STONE RIDGE DRIVE
WESTON, WI 54476

STRUCTURAL ENGINEER:
SPIRE ENGINEERING, INC.
305 N Plankinton Avenue
Suite 101
Milwaukee, WI 53203

| DATE | REVISION |
|---|---|

NORTH

SCALE IN FEET
20' 0 20'

DIGGERS HOTLINE
Toll Free (800) 242-8511

DESIGN REVIEW - NOT FOR CONSTRUCTION -

| | |
|---|---|
| PROJ. NO. | 22002-04 |
| SCALE | AS INDICATED |
| PHASE | 95% CONSTR. DOC. |
| DATE | 10.14.2022 |

DEMOLITION PLAN

C1.0

Copyright (C) Korb & Associates Architects Inc.

File: N:\PROJECTS\2022\221365\DWG\Civil Sheets\221365 Con Docs.dwg Layout: C1.0 - Demolition Plan User: amayou Plotted: Nov 21, 2022 - 1:13pm XrefS:

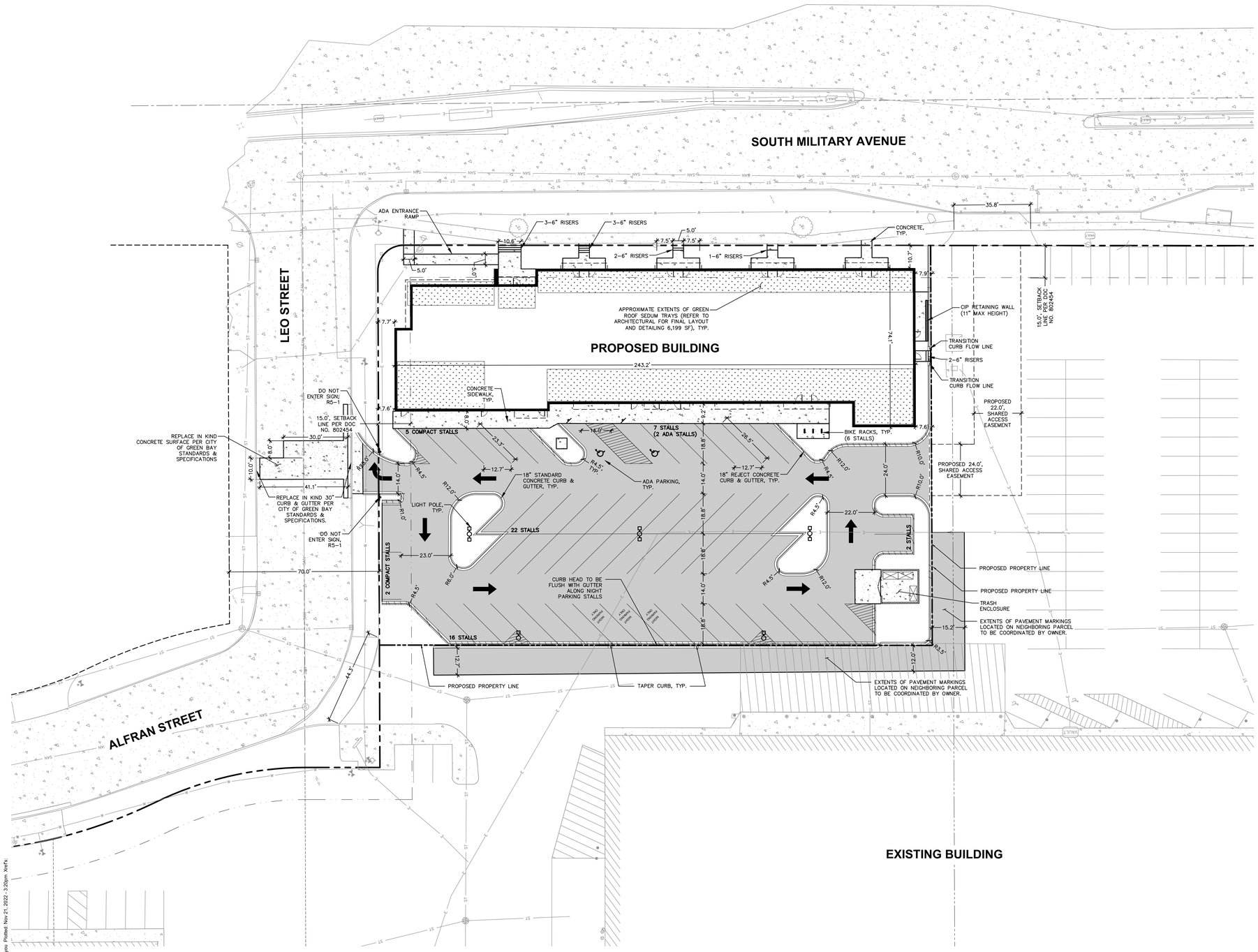


## GENERAL NOTES

1. REFER TO THE EXISTING CONDITIONS SURVEY FOR EXISTING CONDITIONS NOTES AND LEGENDS.
2. ALL WORK IN THE ROW AND/OR PUBLIC EASEMENTS SHALL BE IN ACCORDANCE WITH THE STANDARD SPECIFICATIONS FOR SEWER & WATER CONSTRUCTION IN WISCONSIN AND MUNICIPAL REQUIREMENTS.
3. EXISTING GRADE SPOT ELEVATIONS SHOWN FOR INFORMATIONAL PURPOSES. DURING CONSTRUCTION MATCH EXISTING GRADES AT CONSTRUCTION LIMITS.
4. NO SITE GRADING OUTSIDE OR DOWNSLOPE OF PROPOSED SILT FENCE LOCATION. NO LAND DISTURBANCE BEYOND PROPERTY LINES.
5. JSD SHALL BE HELD HARMLESS AND DOES NOT WARRANT ANY DEVIATIONS BY THE OWNER/CONTRACTOR FROM THE APPROVED CONSTRUCTION PLANS THAT MAY RESULT IN DISCIPLINARY ACTIONS BY ANY OR ALL REGULATORY AGENCIES.

## PAVING NOTES

1. GENERAL

1.1. ALL PAVING SHALL CONFORM TO "STATE OF WISCONSIN STANDARD SPECIFICATIONS FOR HIGHWAY & STRUCTURE CONSTRUCTION, LATEST EDITION, APPLICABLE VILLAGE OF ATHENS ORDINANCES AND THE GEOTECHNICAL REPORT TO BE PREPARED BY INTERTEK PSI DATED JULY 29, 2022.

1.2. ALL PAVING DIMENSIONS ARE TO FACE OF CURB UNLESS SPECIFIED OTHERWISE.

1.3. SURFACE PREPARATION – NOTIFY ENGINEER/OWNER OF UNSATISFACTORY CONDITIONS. DO NOT BEGIN PAVING WORK UNTIL DEFICIENT SUBBASE AREAS HAVE BEEN CORRECTED AND ARE READY TO RECEIVE PAVING.

1.4. ANY REQUIRED REPLACEMENT OF PUBLIC CURB AND GUTTER SHALL MATCH EXISTING AND MEET MUNICIPALITY REQUIREMENTS.

2. ASPHALTIC CONCRETE PAVING SPECIFICATIONS

2.1. CODES AND STANDARDS – THE PLACING, CONSTRUCTION AND COMPOSITION OF THE ASPHALTIC BASE COURSE AND ASPHALTIC CONCRETE SURFACE COURSE SHALL BE IN ACCORDANCE WITH THE REQUIREMENTS OF SECTIONS 450, 455, 460 AND 465 OF THE STATE OF WISCONSIN STANDARD SPECIFICATIONS FOR HIGHWAY AND STRUCTURE CONSTRUCTION, CURRENT EDITION. HEREAFTER, THIS PUBLICATION WILL BE REFERRED TO AS STATE HIGHWAY SPECIFICATIONS.

2.2. WEATHER LIMITATIONS – APPLY TACK COATS WHEN AMBIENT TEMPERATURE IS ABOVE 50° F (10° C) AND WHEN TEMPERATURE HAS NOT BEEN BELOW 35° F (1° C) FOR 12 HOURS IMMEDIATELY PRIOR TO APPLICATION. DO NOT APPLY WHEN BASE IS WET OR CONTAINS EXCESS OF MOISTURE. CONSTRUCT ASPHALTIC CONCRETE SURFACE COURSE WHEN ATMOSPHERIC TEMPERATURE IS ABOVE 40° F (4° C) AND WHEN BASE IS DRY AND WHEN WEATHER IS NOT RAINY. BASE COURSE MAY BE PLACED WHEN AIR TEMPERATURE IS ABOVE 30° F (–1° C).

2.3. GRADE CONTROL – ESTABLISH AND MAINTAIN REQUIRED LINES AND ELEVATIONS FOR EACH COURSE DURING CONSTRUCTION.

2.4. CRUSHED AGGREGATE BASE COURSE – SHALL CONFORM TO SECTIONS 301 AND 305, STATE HIGHWAY SPECIFICAITONS.

2.5. BINDER COURSE AGGREGATE – SHALL CONFORM TO SECTIONS 460 AND 315, STATE HIGHWAY SPECIFICATIONS.

2.6. SURFACE COURSE AGGREGATE – SHALL CONFORM TO SECTIONS 460 AND 465, STATE HIGHWAY SPECIFICATIONS.

2.7. ASPHALTIC MATERIALS – SHALL CONFORM TO SECTION 455 AND 460, STATE HIGHWAY SPECIFICATIONS.

3. CONCRETE PAVING SPECIFICATIONS

3.1. CONCRETE PAVING SHALL BE IN ACCORDANCE WITH THE REQUIREMENTS OF SECTIONS 415 AND 416 OF THE STATE HIGHWAY SPECIFICATIONS.

3.2. CONCRETE PAVEMENT SHALL BE REINFORCED WITH NOVOMESH 950 (OR EQUAL) FIBER REINFORCEMENT AT A RATE OF 5 LBS/CUBIC YARD.

3.3. CURING COMPOUNDS SHALL CONFORM TO SECTION 415 OF THE STATE HIGHWAY SPECIFICATIONS.

3.4. CONTRACTOR SHALL PROVIDE CONTROL JOINTS AND CONSTRUCTION JOINTS OF ONE–QUARTER CONCRETE THICKNESS AT AN EQUAL RATIO OF LENGTH TO WIDTH WHEREVER POSSIBLE WITH A MAXIMUM LENGTH BETWEEN JOINTS OF 8' ON CENTER.

3.5. CONTRACTOR SHALL PROVIDE EXPANSION JOINTS IN SIDEWALKS AT A MAXIMUM 25' ON CENTER.

3.6. EXTERIOR CONCRETE SURFACES SHALL BE BROOM FINISHED.

3.7. ALL CONCRETE SURFACES TO BE SEALED WITH TYPE TK–26UV CONCRETE SEALANT.

4. PAVEMENT MARKING SPECIFICATIONS

4.1. ALL PAVEMENT MARKINGS INCLUDING: STOP BARS, CROSSWALKS, DIRECTIONAL ARROWS, PARKING STALL LINES, ADA STALL MARKINGS, NO PARKING ZONES, DROP–OFF/PICK–UP ZONES SHALL BE PAINTED WITH EPOXY PAINT PER SPECIFICATIONS.

4.2. MARK AND STRIPE ADA PARKING SPACES APPROPRIATELY.

4.3. USE 4" WIDE, HIGH VISIBILITY YELLOW EPOXY PAINT FOR STALL LINES.

4.4. 2' x 4' TRUNCATED DOME WARNING DETECTION FIELD SHALL BE PLACED AT ALL ADA RAMPS.

## LEGEND

- PROPERTY LINE
- RIGHT–OF–WAY
- EASEMENT LINE
- BUILDING OUTLINE
- BUILDING OVERHANG
- BUILDING SETBACK LINE
- EDGE OF PAVEMENT
- STANDARD CURB AND GUTTER
- REJECT CURB AND GUTTER
- ASPHALT PAVEMENT
- CONCRETE PAVEMENT
- LIGHT POLE (REFER TO PHOTOMETRIC PLAN*)
- ADA PARKING SIGN
- BIKE RACK

*LIGHTING PROVIDED BY CRESENT ELECTRIC SUPPLY COMPANY FOR MORE INFORMATION ON PRODUCT QUOTE, PLEASE CONTACT LENNY MEYER AT (920) 734–4517 OR Len.Meyer@cesco.com

## SITE INFORMATION BLOCK

| | |
|---|---|
| SITE ADDRESS | SOUTH MILITARY AVENUE |
| PROPERTY ACREAGE | 1.10 ACRES |
| ZONING DISTRICT | PLANNED UNIT DEVELOPMENT |
| | |
| NUMBER OF BUILDING STORIES | 4 |
| BUILDING SQUARE FOOTAGE | 15,282 |
| | |
| NUMBER OF PARKING STALLS REQ'D: 95 STANDARD/2 ACCESSIBLE | |
| SURFACE | |
| LARGE | 52 |
| ACCESSIBLE | 2 |
| TOTAL SURFACE | 54 |
| | |
| EXISTING VS. PROPOSED SITE COVERAGE | |
| EXISTING IMPERVIOUS SURFACE AREA | 48,215 SF |
| EXISTING PERVIOUS SURFACE AREA | 48,215 SF |
| EXISTING IMPERVIOUS SURFACE AREA RATIO | 1.00 |
| | |
| PROPOSED IMPERVIOUS SURFACE AREA | 35,198 SF |
| PROPOSED PERVIOUS SURFACE AREA | 13,017 SF |
| PROPOSED IMPERVIOUS SURFACE AREA RATIO | 0.73 |

KORB + ASSOCIATES ARCHITECTS

JSD

PROJECT:
BAY CITY LOFTS
216 S. MILITARY AVE.
GREEN BAY, WI

OWNER:
GORMAN & COMPANY
200 N Main Street
Oregon, WI 53575

ARCHITECT:
KORB + ASSOCIATES ARCHITECTS
648 N. PLANKINTON AVE
SUITE 240
MILWAUKEE, WI 53203

CIVIL ENGINEER:
JSD PROFESSIONAL SERVICES, INC.
7402 STONE RIDGE DRIVE
WESTON, WI 54476

STRUCTURAL ENGINEER:
SPIRE ENGINEERING, INC.
305 N Plankinton Avenue
Suite 101
Milwaukee, WI 53203

| DATE | REVISION |
|---|---|

North

SCALE IN FEET
20' 0 20'

DIGGERS HOTLINE
Toll Free (800) 242-8511

DESIGN REVIEW - NOT FOR CONSTRUCTION -

| | |
|---|---|
| PROJ. NO. | 22002-04 |
| SCALE: | AS INDICATED |
| PHASE: | 95% CONSTR. DOC. |
| DATE: | 10.14.2022 |

SITE PLAN

C2.0

Copyright (C) Korb & Associates Architects Inc.

File: N:\PROJECTS\2022\22211365\DWG\Civil Sheets\2211365 Con Docs.dwg Layout: C2.0 - Site Plan User: amayou Plotted: Nov 21, 2022 - 3:20pm Xref's:

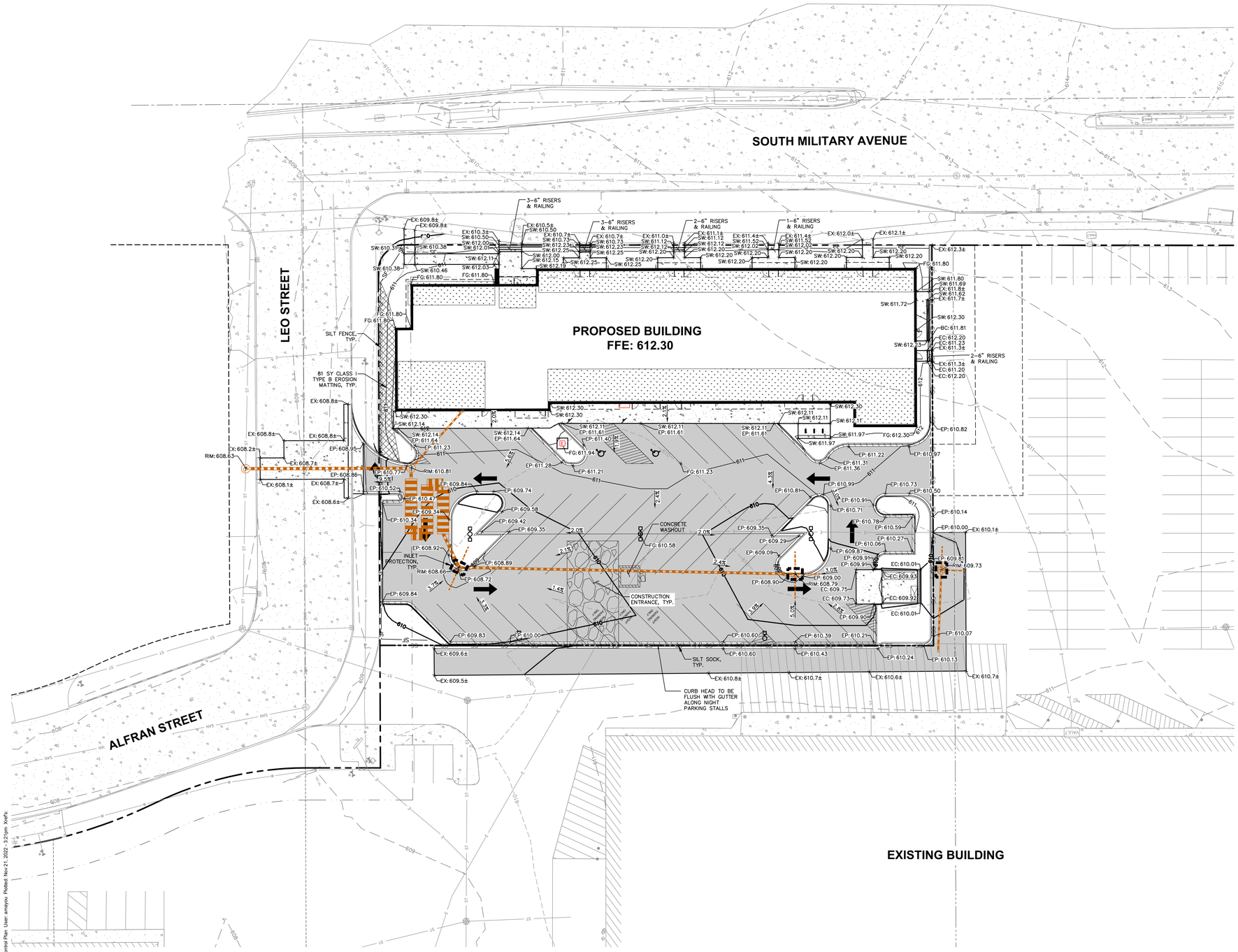


## EROSION CONTROL NOTES

1. CONTRACTOR IS RESPONSIBLE TO NOTIFY ENGINEER OF RECORD AND OFFICIALS OF ANY CHANGES TO THE EROSION CONTROL AND STORMWATER MANAGEMENT PLANS. ENGINEER OF RECORD AND APPROPRIATE CITY OF GREEN BAY OFFICIALS MUST APPROVE ANY CHANGES PRIOR TO DEVIATION FROM THE APPROVED PLANS.
2. ALL EROSION CONTROL MEASURES SHALL BE CONSTRUCTED AND MAINTAINED BY THE CONTRACTOR IN ACCORDANCE WITH THE WISCONSIN DEPARTMENT OF NATURAL RESOURCES (WDNR) TECHNICAL STANDARDS (REFERRED TO AS BMP'S) AND CITY OF GREEN BAY ORDINANCE. IT IS THE CONTRACTOR'S RESPONSIBILITY TO OBTAIN A COPY OF THESE STANDARDS. CONTRACTOR SHALL BE RESPONSIBLE FOR ANY ADDITIONAL EROSION CONTROL MEASURES WHICH MAY BE NECESSARY TO MEET UNFORESEEN FIELD CONDITIONS.
5. INSTALL PERIMETER EROSION CONTROL MEASURES (SUCH AS CONSTRUCTION ENTRANCES, SILT FENCE AND EXISTING INLET PROTECTION) PRIOR TO ANY SITE WORK, INCLUDING GRADING OR DISTURBANCE OF EXISTING SURFACE COVER, AS SHOWN ON PLAN. MODIFICATIONS TO THE APPROVED EROSION CONTROL DESIGN IN ORDER TO MEET UNFORESEEN FIELD CONDITIONS IS ALLOWED IF MODIFICATIONS CONFORM TO BMP'S. ALL DESIGN MODIFICATIONS MUST BE APPROVED BY THE CITY OF GREEN BAY PRIOR TO DEVIATION OF THE APPROVED PLAN.
4. ADDITIONAL EROSION CONTROL MEASURES, AS REQUESTED BY STATE INSPECTORS, LOCAL INSPECTORS, COUNTY INSPECTORS AND/OR ENGINEER OF RECORD SHALL BE INSTALLED WITHIN 24 HOURS OF REQUEST.
5. INSPECTIONS AND MAINTENANCE OF ALL EROSION CONTROL MEASURES SHALL BE ROUTINE (ONCE PER WEEK MINIMUM) TO ENSURE PROPER FUNCTION OF EROSION CONTROLS AT ALL TIMES. EROSION CONTROL MEASURES ARE TO BE IN WORKING ORDER AT THE END OF EACH WORK DAY.
6. ALL EROSION AND SEDIMENT CONTROL ITEMS SHALL BE INSPECTED WITHIN 24 HOURS OF ALL RAIN EVENTS EXCEEDING 0.5 INCHES. ANY DAMAGED EROSION CONTROL MEASURES SHALL BE REPAIRED OR REPLACED IMMEDIATELY UPON INSPECTION.
7. CONSTRUCTION ENTRANCES SHALL BE INSTALLED AT ALL LOCATIONS OF VEHICLE INGRESS/EGRESS POINTS. ADDITIONAL LOCATIONS OTHER THAN AS SHOWN ON THE PLANS MUST BE PRIOR APPROVED BY THE MUNICIPALITY. CONSTRUCTION ENTRANCES SHALL BE 50' LONG AND NO LESS THAN 12" THICK BY USE OF 3" CLEAR STONE. CONSTRUCTION ENTRANCES SHALL BE MAINTAINED BY THE CONTRACTOR IN A CONDITION WHICH WILL PREVENT THE TRACKING OF MUD OR DRY SEDIMENT ONTO ADJACENT PUBLIC STREETS AFTER EACH WORKING DAY OR MORE FREQUENTLY AS REQUIRED.
8. PAVED SURFACES ADJACENT TO CONSTRUCTION SITE VEHICLE ACCESS SHALL BE SWEPT AND/OR SCRAPED TO REMOVE ACCUMULATED SOIL, DIRT AND/OR DUST AFTER THE END OF EACH WORK DAY AND AS REQUESTED BY THE CITY OF GREEN BAY.
9. INLET PROTECTION SHALL BE IMMEDIATELY FITTED AT THE INLET OF ALL INSTALLED STORM SEWER AND SILT FENCE SHALL BE IMMEDIATELY FITTED AT ALL INSTALLED CULVERT INLETS TO PREVENT SEDIMENT DEPOSITION WITHIN STORM SEWER SYSTEMS.
10. INSTALL EROSION CONTROLS ON THE DOWNSTREAM SIDE OF STOCKPILES. IF STOCKPILE REMAINS UNDISTURBED FOR MORE THAN SEVEN (7) DAYS, TEMPORARY SEEDING AND STABILIZATION IN ACCORDANCE WITH BEST MANAGEMENT PRACTICES IS REQUIRED. IF DISTURBANCE OCCURS BETWEEN NOVEMBER 15TH AND MAY 15TH, THE MULCHING SHALL BE PERFORMED BY HYDRO-MULCHING WITH A "TACKIFIER."
11. DITCH CHECKS AND APPLICABLE EROSION NETTING/MATTING SHALL BE INSTALLED IMMEDIATELY AFTER COMPLETION OF GRADING EFFORTS WITHIN DITCHES/SWALES TO PREVENT SOIL TRANSPORTATION.
12. EROSION CONTROL FOR UTILITY CONSTRUCTION (STORM SEWER, SANITARY SEWER, WATER MAIN, ETC.):
    - 12.1. PLACE EXCAVATED TRENCH MATERIAL ON THE HIGH SIDE OF THE TRENCH.
    - 12.2. BACKFILL, COMPACT, AND STABILIZE THE TRENCH IMMEDIATELY AFTER PIPE CONSTRUCTION.
    - 12.3. DISCHARGE TRENCH WATER INTO A SEDIMENTATION BASIN OR FILTERING TANK IN ACCORDANCE WITH THE DEWATERING TECHNICAL STANDARD NO. 1061 PRIOR TO RELEASE INTO THE STORM SEWER, RECEIVING STREAM, OR DRAINAGE DITCH.
13. ALL SLOPES 4:1 OR GREATER SHALL BE STABILIZED WITH CLASS I, TYPE B EROSION MATTING OR APPLICATION OF A WISCONSIN DEPARTMENT OF TRANSPORTATION (WisDOT) APPROVED POLYMER SOIL STABILIZATION TREATMENT OR A COMBINATION THEREOF, AS REQUIRED WITHIN 7 DAYS OF REACHING FINAL GRADE AND/OR AS SOON AS CONDITIONS ALLOW. DRAINAGE SWALES SHALL BE STABILIZED WITH CLASS II, TYPE B EROSION MATTING. EROSION MATTING AND/OR NETTING USED ONSITE SHALL BE INSTALLED IN ACCORDANCE WITH MANUFACTURER'S GUIDELINES AND WDNR TECHNICAL STANDARDS 1052 AND 1053.
14. CONTRACTOR SHALL TAKE ALL NECESSARY STEPS TO CONTROL DUST ARISING FROM CONSTRUCTION OPERATIONS. REFER TO WDNR TECHNICAL STANDARD 1068.
15. EROSION CONTROL MEASURES SHALL NOT BE REMOVED UNTIL ALL LAND DISTURBING CONSTRUCTION ACTIVITY AT THE SITE HAS BEEN COMPLETED AND THAT A UNIFORM PERENNIAL VEGETATIVE COVER HAS BEEN ESTABLISHED WITH A DENSITY OF AT LEAST 70% FOR UNPAVED AREAS AND AREAS NOT COVERED BY PERMANENT STRUCTURES OR THAT EMPLOY EQUIVALENT PERMANENT STABILIZATION MEASURES.
16. CONTRACTOR/OWNER SHALL FILE A NOTICE OF TERMINATION UPON COMPLETION OF THE PROJECT IN ACCORDANCE WITH WDNR REQUIREMENTS AND/OR PROPERTY SALE IN ACCORDANCE WITH WDNR REQUIREMENTS.
17. <u>STABILIZATION PRACTICES</u>:
    - 17.1. STABILIZATION MEASURES SHALL BE INITIATED AS SOON AS PRACTICABLE IN PORTIONS OF THE SITE WHERE CONSTRUCTION ACTIVITIES HAVE TEMPORARILY OR PERMANENTLY CEASED, NO MORE THAN SEVEN (7) DAYS SHALL PASS AFTER THE CONSTRUCTION ACTIVITY IN THAT PORTION OF THE SITE HAS CEASED UNLESS:
    - 17.2. THE INITIATION STABILIZATION MEASURES BY THE SEVENTH (7) DAY AFTER CONSTRUCTION ACTIVITY HAS CEASED IS PRECLUDED BY SNOW COVER. IN THAT EVENT, STABILIZATION SHALL BE INITIATED AS SOON AS PRACTICABLE.
    - 17.3. CONSTRUCTION ACTIVITY WILL RESUME ON A PORTION OF THE SITE WITHIN FOURTEEN (14) DAYS FROM WHEN ACTIVITY CEASED, (I.E. THE TOTAL TIME PERIOD THAT THE CONSTRUCTION ACTIVITY IS TEMPORARILY CEASED IS LESS THAN FOURTEEN (14) DAYS. IN THAT EVENT, STABILIZATION MEASURES DO NOT HAVE TO BE INITIATED ON THAT PORTION OF THE SITE BY THE SEVENTH (7) DAY AFTER CONSTRUCTION ACTIVITY HAS TEMPORARILY CEASED.
    - 17.4. STABILIZATION MEASURES SHALL BE DETERMINED BASED ON SITE CONDITIONS AT THE TIME OF CONSTRUCTION ACTIVITY HAS CEASED, INCLUDING BUT NOT LIMITED TO WEATHER CONDITIONS AND LENGTH OF TIME MEASURE MUST BE EFFECTIVE. THE FOLLOWING ARE ACCEPTABLE STABILIZATION MEASURES:
        - PERMANENT SEEDING; IN ACCORDANCE WITH APPROVED CONSTRUCTION SPECIFICATION
        - TEMPORARY SEEDING; MAY CONSIST OF SPRING OATS(100LBS/ACRE) AND/OR WHEAT OR CEREAL RYE (150LB/ACRE)
        - HYDRO-MULCHING WITH A TACKIFIER
        - GEOTEXTILE EROSION MATTING
        - SODDING

## GRADING AND SEEDING NOTES

1. ALL PROPOSED GRADES SHOWN ARE FINISHED GRADES. CONTRACTOR SHALL VERIFY ALL GRADES, MAKE SURE ALL AREAS DRAIN PROPERLY AND SHALL REPORT ANY DISCREPANCIES TO THE ENGINEER PRIOR TO CONSTRUCTION.
2. CONTRACTOR SHALL ASSUME SOLE RESPONSIBILITY FOR COMPUTATIONS OF ALL GRADING QUANTITIES. WHILE JSD PROFESSIONAL SERVICES, INC. ATTEMPTS TO PROVIDE A COST EFFECTIVE APPROACH TO BALANCE EARTHWORK, GRADING DESIGN IS BASED ON MANY FACTORS, INCLUDING SAFETY, AESTHETICS, AND COMMON ENGINEERING STANDARDS OF CARE. THEREFORE, NO GUARANTEE CAN BE MADE FOR A BALANCED SITE.
3. PARKING LOT AND DRIVEWAY ELEVATIONS ARE PAVEMENT GRADES, NOT TOP OF CURB GRADES, UNLESS OTHERWISE NOTED.
4. ANY WORK WITHIN RIGHT-OF-WAY SHALL BE PROPERLY PERMITTED AND COORDINATED WITH THE APPROPRIATE OFFICIALS PRIOR TO COMMENCEMENT OF ANY CONSTRUCTION ACTIVITIES. ALL GRADING WITHIN RIGHT-OF-WAY IS SUBJECT TO APPROVAL BY SAID OFFICIALS.
5. CONTRACTOR SHALL PROVIDE NOTICE TO THE MUNICIPALITY IN ADVANCE OF ANY SOIL DISTURBING ACTIVITIES, IN ACCORDANCE WITH MUNICIPAL REQUIREMENTS.
6. ALL DISTURBED AREAS SHALL BE SODDED AND/OR SEEDED AND MULCHED IMMEDIATELY FOLLOWING GRADING ACTIVITIES. SOD/SEED MIX TO BE IN ACCORDANCE WITH LANDSCAPE PLAN.
7. CONTRACTOR SHALL WATER ALL NEWLY SODDED/SEEDED AREAS DURING THE SUMMER MONTHS WHENEVER THERE IS A 7 DAY LAPSE WITH NO SIGNIFICANT RAINFALL.
8. CONTRACTOR TO DEEP TILL ALL COMPACTED PERVIOUS SURFACES PRIOR TO SODDING AND/OR SEEDING AND MULCHING.
9. ALL SLOPES 20% OR GREATER SHALL BE TEMPORARY SEEDED, MULCHED, OR OTHER MEANS OF COVER PLACED ON THEM WITHIN 2 WEEKS OF DISTURBANCE.
10. ALL EXPOSED SOIL AREAS THAT WILL NOT BE BROUGHT TO FINAL GRADE OR ON WHICH LAND DISTURBING ACTIVITIES WILL NOT BE PERFORMED FOR A PERIOD GREATER THAN 14 DAYS AND REQUIRE VEGETATIVE COVER FOR LESS THAN 1 YEAR, REQUIRE TEMPORARY SEEDING FOR EROSION CONTROL. SEEDING FOR EROSION CONTROL SHALL BE IN ACCORDANCE WITH WDNR TECHNICAL STANDARD 1059 AND CITY OF GREEN BAY ORDINANCE.

## LEGEND

| | |
|---|---|
| PROPERTY LINE | DRAINAGE DIRECTION |
| RIGHT-OF-WAY | RETAINING WALL |
| EASEMENT LINE | SILT FENCE |
| BUILDING OUTLINE | SILT SOCK |
| BUILDING OVERHANG | CONSTRUCTION ENTRANCE |
| EDGE OF PAVEMENT | |
| STANDARD CURB AND GUTTER | EROSION MATTING |
| REJECT CURB AND GUTTER | FG: XXX.XX — SPOT ELEVATION<br>EP – EDGE OF PAVEMENT<br>FG – FINISH GRADE<br>EC – EDGE OF CONCRETE<br>BC – BACK OF CURB<br>EX – MATCH EXISTING GRADE<br>HP – HIGH POINT<br>SW – SIDEWALK |
| ASPHALT PAVEMENT | |
| CONCRETE PAVEMENT | |
| 959 — PROPOSED 1 FOOT CONTOUR | |
| 960 — PROPOSED 5 FOOT CONTOUR | |
| 959 — EXISTING 1 FOOT CONTOUR | INLET PROTECTION |
| 960 — EXISTING 5 FOOT CONTOUR | |

North

SCALE IN FEET
20' 0 20'

DIGGERS HOTLINE
Toll Free (800) 242-8511

KORB + ASSOCIATES ARCHITECTS

JSD

PROJECT:
BAY CITY LOFTS
216 S. MILITARY AVE.
GREEN BAY, WI

OWNER:
GORMAN & COMPANY
200 N Main Street
Oregon, WI 53575

ARCHITECT:
KORB + ASSOCIATES ARCHITECTS
648 N. PLANKINTON AVE
SUITE 240
MILWAUKEE, WI 53203

CIVIL ENGINEER:
JSD PROFESSIONAL SERVICES, INC.
7402 STONE RIDGE DRIVE
WESTON, WI 54476

STRUCTURAL ENGINEER:
SPIRE ENGINEERING, INC.
305 N Plankinton Avenue
Suite 101
Milwaukee, WI 53203

| DATE | REVISION |
|---|---|

DESIGN REVIEW - NOT FOR CONSTRUCTION -

| | |
|---|---|
| PROJ. NO. | 22002-04 |
| SCALE: | AS INDICATED |
| PHASE: | 95% CONSTR. DOC. |
| DATE: | 10.14.2022 |

GRADING & EROSION CONTROL PLAN

C3.0

Copyright (C) Korb & Associates Architects Inc.

File: N:\PROJECTS\2022\221135\5\DWG\Civil Sheets\221135 Con Docs.dwg Layout: C3.0 - Grading & Erosion Control Plan User: amayou Plotted: Nov 21, 2022 - 3:21pm Xrefs:

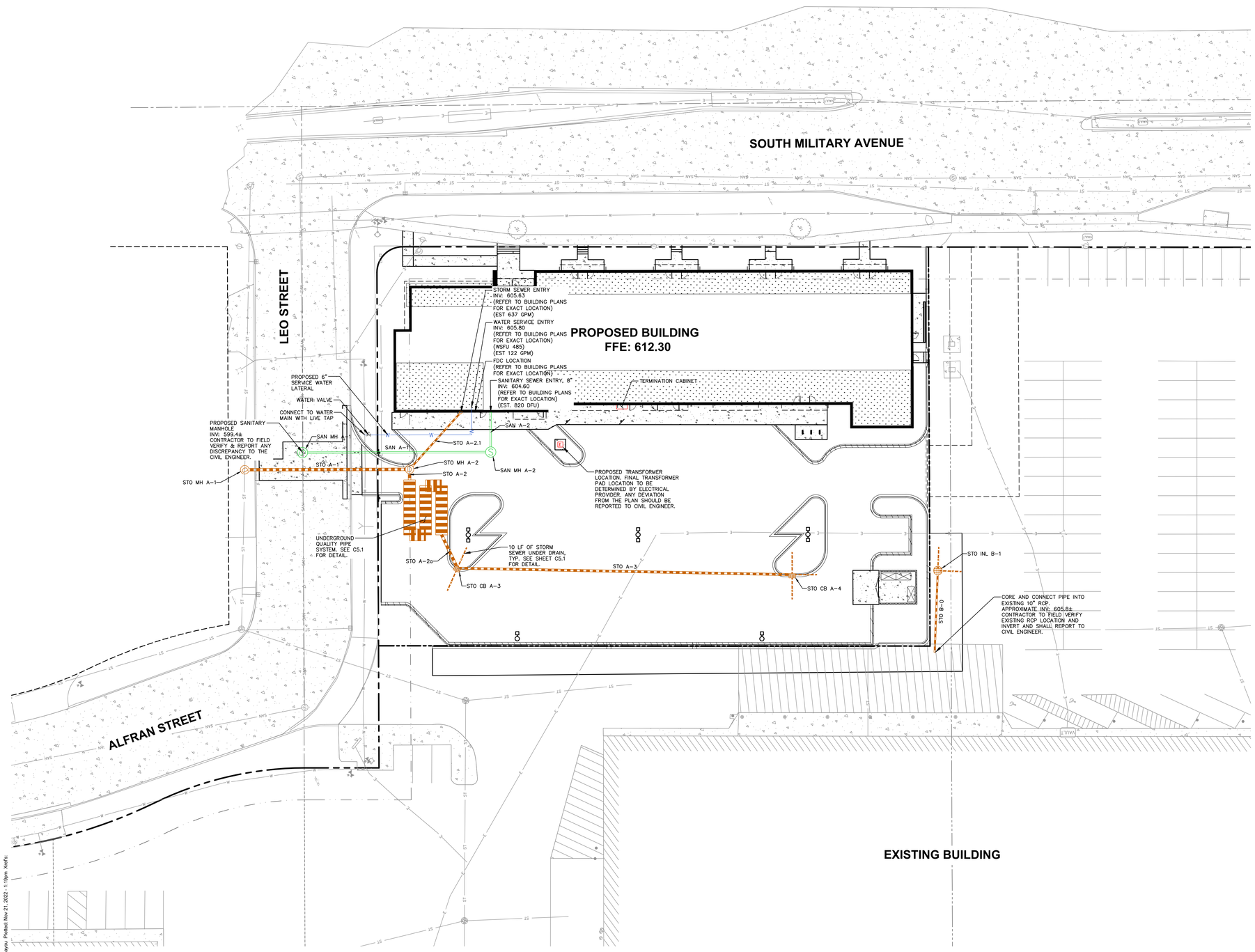


## UTILITY NOTES

1. ALL EXISTING UTILITIES ARE SHOWN FOR INFORMATIONAL PURPOSES ONLY AND ARE NOT GUARANTEED TO BE ACCURATE OR ALL INCLUSIVE. THE CONTRACTOR IS RESPONSIBLE FOR MAKING HIS OWN DETERMINATION AS TO THE TYPE AND LOCATIONS OF UNDERGROUND UTILITIES AS MAY BE NECESSARY TO AVOID DAMAGE THERETO. CONTRACTOR/OWNER SHALL CALL "DIGGER'S HOTLINE" PRIOR TO ANY CONSTRUCTION.

2. PRIOR TO CONSTRUCTION, THE PRIME CONTRACTOR IS RESPONSIBLE FOR:
   - 2.1. EXAMINING ALL SITE CONDITIONS RELATIVE TO THE CONDITIONS INDICATED ON THE ENGINEERING DRAWINGS. ANY DISCREPANCIES ARE TO BE REPORTED TO THE ENGINEER AND RESOLVED PRIOR TO THE START OF CONSTRUCTION.
   - 2.2. OBTAINING ALL PERMITS INCLUDING PERMIT COSTS, TAP FEES, METER DEPOSITS, BONDS, AND ALL OTHER FEES REQUIRED FOR PROPOSED WORK TO OBTAIN OCCUPANCY.
   - 2.3. VERIFYING ALL ELEVATIONS, LOCATIONS AND SIZES OF SANITARY, WATER AND STORM LATERALS AND CHECK ALL UTILITY CROSSINGS FOR CONFLICTS. NOTIFY ENGINEER OF ANY DISCREPANCY. NO WORK SHALL BE PERFORMED UNTIL THE DISCREPANCY IS RESOLVED.
   - 2.4. NOTIFYING ALL UTILITIES PRIOR TO INSTALLATION OF ANY UNDERGROUND IMPROVEMENTS.
   - 2.5. NOTIFYING THE DESIGN ENGINEER AND MUNICIPALITY 48 HOURS PRIOR TO THE START OF CONSTRUCTION TO ARRANGE FOR APPROPRIATE CONSTRUCTION OBSERVATION.
   - 2.6. COORDINATING ALL CONSTRUCTION WITH OTHER CONTRACTORS INVOLVED WITH CONSTRUCTION OF THE PROPOSED DEVELOPMENT AND FOR REPORTING ANY ERRORS OR DISCREPANCIES BETWEEN THESE PLANS AND PLANS PREPARED BY OTHERS.

3. ALL UTILITY WORK SHALL BE DONE IN ACCORDANCE WITH THE STANDARD SPECIFICATIONS FOR SEWER AND WATER CONSTRUCTION IN WISCONSIN – AND ALL STATE AND LOCAL CODES AND SPECIFICATIONS. IT IS THE CONTRACTORS RESPONSIBILITY TO DETERMINE WHICH SPECIFICATIONS AND CODES APPLY, AND TO COORDINATE ALL CONSTRUCTION ACTIVITIES WITH THE APPROPRIATE LOCAL AND STATE AUTHORITIES.

4. LENGTHS OF ALL UTILITIES ARE TO CENTER OF STRUCTURES OR FITTINGS AND MAY VARY SLIGHTLY FROM PLAN. LENGTHS SHALL BE VERIFIED IN THE FIELD DURING CONSTRUCTION.

5. CONTRACTOR IS RESPONSIBLE FOR SITE SAFETY DURING THE CONSTRUCTION OF IMPROVEMENTS.

6. CONTRACTOR SHALL INSTALL A PEDESTRIAN FENCE AROUND ALL EXCAVATIONS TO BE LEFT OPEN OVER NIGHT AS REQUIRED IN CONSTRUCTION SITES WHERE THE POTENTIAL FOR PEDESTRIAN INJURY EXISTS.

7. CONTRACTOR SHALL ADJUST AND/OR RECONSTRUCT ALL UTILITY COVERS (SUCH AS MANHOLE COVERS, VALVE BOX COVERS, ETC.) TO MATCH THE FINISHED GRADES OF THE AREAS EFFECTED BY THE CONSTRUCTION.

8. THE PRIME CONTRACTOR IS RESPONSIBLE FOR COORDINATING ALL CONSTRUCTION WITH OTHER CONTRACTORS INVOLVED WITH CONSTRUCTION OF THE PROPOSED DEVELOPMENT AND FOR REPORTING ANY ERRORS OR DISCREPANCIES BETWEEN THESE PLANS AND PLANS PREPARED BY OTHERS.

9. ANY UTILITIES, WHICH ARE DAMAGED BY THE CONTRACTORS, SHALL BE REPAIRED TO THE OWNER'S SATISFACTION AT THE CONTRACTOR'S EXPENSE.

10. THE CONTRACTOR IS RESPONSIBLE FOR PROVIDING THE ENGINEER WITH AS–BUILT CONDITIONS OF THE DESIGNATED IMPROVEMENTS IN ORDER THAT THE APPROPRIATE DRAWINGS CAN BE PREPARED, IF REQUIRED. ANY CHANGES TO THE DRAWINGS OR ADDITIONAL ITEMS MUST BE REPORTED TO THE ENGINEER AS WORK PROGRESSES.

11. STORM SEWER SPECIFICATIONS –

    PIPE – REINFORCED CONCRETE PIPE (RCP) SHALL MEET THE REQUIREMENTS OF ASTM CLASS III (MINIMUM) C–76 WITH RUBBER GASKET JOINTS CONFORMING TO ASTM C–443. HIGH DENSITY DUAL–WALL POLYETHYLENE CORRUGATED PIPE SHALL BE AS MANUFACTURED BY ADS OR EQUAL WITH WATER TIGHT JOINTS, AND SHALL MEET THE REQUIREMENTS OF AASHTO DESIGNATION M–294 TYPE "S". POLYVINYLCHLORIDE (PVC) MEETING REQUIREMENTS OF ASTM D 3034, SDR 35 FOR PIPE SIZES 8"–15" WITH INTEGRAL BELL TYPE FLEXIBLE ELASTOMERIC JOINTS, MEETING THE REQUIREMENTS OF ASTM D–3212 AND ASTM 1785 SCHEDULE 40 FOR PIPE SIZES 6" OR SMALLER

    BACKFILL AND BEDDING – STORM SEWER SHALL BE CONSTRUCTED WITH GRAVEL BACKFILL AND CLASS "B" BEDDING IN ALL PAVED AREAS AND TO A POINT 5 FEET BEYOND THE EDGE OF PAVEMENT. TRENCHES RUNNING PARALLEL TO AND LESS THAN 5 FEET FROM THE EDGE OF PAVEMENT SHALL ALSO REQUIRE GRAVEL BACKFILL. LANDSCAPED AREAS MAY BE BACKFILLED WITH EXCAVATED MATERIAL IN CONFORMANCE WITH SECTION 8.43.5 OF THE "STANDARD SPECIFICATIONS".

    MANHOLE FRAMES AND COVERS – MANHOLE FRAMES AND COVERS SHALL BE PROVIDED IN ACCORDANCE WITH THE STORM STRUCTURE TABLE ON SHEET C4.0.

    FIELD TILE CONNECTION – ALL FIELD TILE ENCOUNTERED DURING CONSTRUCTION SHALL BE INCLUDED IN THE UNIT PRICE(S) FOR STORM SEWER. TILE LINES CROSSED BY THE TRENCH SHALL BE REPLACED WITH THE SAME MATERIAL AS THE STORM SEWER.

12. WATER MAIN SPECIFICATIONS –

    PIPE – DUCTILE IRON PIPE SHALL BE CLASS 52 CONFORMING TO AWWA C151 AND CHAPTER 8.18.0 OF THE "STANDARD SPECIFICATIONS". POLYVINYL CHLORIDE (PVC) PIPE SHALL MEET THE REQUIREMENTS OF AWWA STANDARD C–900, CLASS 150, DR–18, WITH CAST IRON O.D. AND INTEGRAL ELASTOMERIC BELL AND SPIGOT JOINTS. NON–METALLIC WATER MAINS SHALL BE INSTALLED WITH BLUE INSULATION TRACER WIRE AND CONFORM WITH SPS 382.30(11)(h).

    VALVES AND VALVE BOXES – GATE VALVES SHALL BE AWWA GATE VALVES MEETING THE REQUIREMENTS OF AWWA C–500 AND CHAPTER 8.27.0 OF THE "STANDARD SPECIFICATIONS". GATE VALVES AND VALVE BOXES SHALL CONFORM TO LOCAL PLUMBING ORDINANCES.

    BEDDING AND COVER MATERIAL – PIPE BEDDING AND COVER MATERIAL SHALL BE SAND, CRUSHED STONE CHIPS OR CRUSHED STONE SCREENINGS CONFORMING TO CHAPTER 8.43.2 OF THE "STANDARD SPECIFICATIONS".

    BACKFILL – BACKFILL MATERIAL AND INSTALLATION SHALL BE IN ACCORDANCE WITH CHAPTER 2.6.0 OF THE "STANDARD SPECIFICATIONS". GRAVEL BACKFILL IS REQUIRED IN ALL PAVED AREAS AND TO A POINT 5 FEET BEYOND THE EDGE OF PAVEMENT. TRENCHES RUNNING PARALLEL TO AND LESS THAN 5 FEET FROM THE EDGE OF PAVEMENT SHALL ALSO REQUIRE GRAVEL BACKFILL. LANDSCAPED AREAS MAY BE BACKFILLED WITH EXCAVATED MATERIAL IN CONFORMANCE WITH SECTION 8.43.5 OF THE "STANDARD SPECIFICATIONS".

13. SANITARY SEWER SPECIFICATIONS –

    PIPE – SANITARY SEWER PIPE MATERIAL SHALL BE POLYVINYL CHLORIDE (PVC) MEETING REQUIREMENTS OF ASTM D 3034, SDR–35, WITH INTEGRAL BELL TYPE FLEXIBLE ELASTOMERIC JOINTS, MEETING THE REQUIREMENTS OF ASTM D–3212 FOR PIPE SIZES 8" TO 15"; ASTM 1785, SCHEDULE 40 FOR PIPE SIZES 6" OR SMALLER.

    BEDDING AND COVER MATERIAL – BEDDING AND COVER MATERIAL SHALL CONFIRM TO THE APPROPRIATE SECTIONS OF THE "STANDARD SPECIFICATION" WITH THE FOLLOWING MODIFICATION: "COVER MATERIAL SHALL BE THE SAME AS USED FOR BEDDING AND SHALL CONFORM TO SECTION 8.43.2 (A).

    BACKFILL – BACKFILL MATERIAL AND INSTALLATION SHALL BE IN ACCORDANCE CHAPTER 2.6.0 OF THE "STANDARD SPECIFICATIONS." BACKFILL WITH EXCAVATED MATERIAL IN CONFORMANCE WITH SECTION 8.43.5 OF THE "STANDARD SPECIFICATIONS".

14. WATERMAIN AND SANITARY SEWER SHALL BE INSULATED WHEREVER THE DEPTH OF COVER IS LESS THAN 6 FEET. INSULATION SHALL BE INSTALLED IN CONFORMANCE WITH CHAPTER 4.17.0 "INSULATION" OF THE STANDARD SPECIFICATIONS FOR SEWER AND WATER CONSTRUCTION IN WISCONSIN 6TH EDITION UPDATED WITH ITS LATEST ADDENDUM (TYP.).

## LEGEND

- PROPERTY LINE
- RIGHT–OF–WAY
- EASEMENT LINE
- BUILDING OUTLINE
- BUILDING OVERHANG
- EDGE OF PAVEMENT
- STANDARD CURB AND GUTTER
- REJECT CURB AND GUTTER
- ASPHALT PAVEMENT
- CONCRETE PAVEMENT
- RETAINING WALL
- SAN — SANITARY SEWER
- W — WATERMAIN
- STORM SEWER
- 8'x4'x2" INSULATION (PLAN VIEW)

### PROPOSED STORM SEWER STRUCTURE TABLE

| LABEL | RIM EL. (FT) | INVERT EL. (FT) | DEPTH (FT) | STRUCTURE DESC. | FRAME & GRATE |
|---|---|---|---|---|---|
| STO CB A–3 | 608.66 | E INV: 604.21 (15")<br>SW INV: 604.46 (12") | 4.4 | 2 x 3 INLET | R–3067 TYPE L |
| STO CB A–4 | 608.79 | NE INV: 605.21 (12") | 3.6 | 2 x 3 INLET | R–3067 TYPE L |
| STO INL B–1 | 609.73 | NW INV: 607.08 (8") | 2.6 | 36 IN MH (FLAT) | R–2050 TYPE D |
| STO MH A–1 | 608.64 | SE INV: 603.47 (30")<br>SW INV: 603.57 (15")<br>NW INV: 603.47 (30") | 5.2 | 72 IN MH (FLAT) | R–1556 SOLID LID |
| STO MH A–2 | 610.81 | NE INV: 603.96 (15")<br>NW INV: 604.06 (15")<br>S INV: 605.26 (8") | 6.9 | 60 IN MH (FLAT) | R–1556 SOLID LID |

### PROPOSED STORM SEWER PIPE TABLE

| LABEL | FROM | TO | LENGTH | INVERT EL. (FT) | DISCHARGE EL. (FT) | SLOPE | SIZE |
|---|---|---|---|---|---|---|---|
| STO A–1 | STO MH A–2 | STO MH A–1 | 77' | 603.96 | 603.57 | 0.50% | 15 IN |
| STO A–2 | END CAP | STO MH A–2 | 5' | 604.08 | 604.06 | 0.50% | 15 IN |
| STO A–2.1 | BUILDING | STO MH A–2 | 36' | 605.63 | 605.26 | 1.04% | 8 IN |
| STO A–2a | STO CB A–3 | END CAP | 17' | 604.21 | 604.08 | 0.76% | 15 IN |
| STO A–3 | STO CB A–4 | STO CB A–3 | 157' | 605.21 | 604.46 | 0.48% | 12 IN |
| STO B–0 | STO INL B–1 | 10" RCP | 38' | 607.08 | 605.87 | 3.17% | 8 IN |

### PROPOSED SANITARY SEWER STRUCTURE TABLE

| LABEL | RIM EL. (FT) | INVERT EL. (FT) | DEPTH (FT) | STRUCTURE DESC. | FRAME & GRATE |
|---|---|---|---|---|---|
| SAN MH A–1 * | 609.03 | SE INV: 599.41 (8")<br>NW INV: 599.41 (8")<br>SW INV: 602.36 (8") | 9.6 | 48 IN MH | R–1556 SOLID LID |
| SAN MH A–2 | 611.00 | NE INV: 604.13 (8")<br>SE INV: 604.23 (8") | 6.9 | 48 IN MH | R–1556 SOLID LID |

*OUTSIDE DROP SANITARY MANHOLE.
SEE SHEET C5.0 FOR DETAIL.

### PROPOSED SANITARY SEWER PIPE TABLE

| LABEL | FROM | TO | LENGTH | INVERT EL. (FT) | DISCHARGE EL. (FT) | SLOPE | SIZE |
|---|---|---|---|---|---|---|---|
| SAN A–1 | SAN MH A–2 | SAN MH A–1 | 88' | 604.13 | 602.36 | 2.00% | 8 IN |
| SAN A–2 | BUILDING | SAN MH A–2 | 19' | 604.60 | 604.23 | 2.00% | 8 IN |

SCALE IN FEET
20' 0 20'

DIGGERS HOTLINE
Toll Free (800) 242-8511

KORB + ASSOCIATES ARCHITECTS

JSD

PROJECT:
BAY CITY LOFTS
216 S. MILITARY AVE.
GREEN BAY, WI

OWNER:
GORMAN & COMPANY
200 N Main Street
Oregon, WI 53575

ARCHITECT:
KORB + ASSOCIATES
ARCHITECTS
648 N. PLANKINTON AVE
SUITE 240
MILWAUKEE, WI 53203

CIVIL ENGINEER:
JSD PROFESSIONAL
SERVICES, INC.
7402 STONE RIDGE DRIVE
WESTON, WI 54476

STRUCTURAL ENGINEER:
SPIRE ENGINEERING, INC.
305 N Plankinton Avenue
Suite 101
Milwaukee, WI 53203

| DATE | REVISION |
|---|---|

DESIGN REVIEW - NOT FOR CONSTRUCTION -

| | |
|---|---|
| PROJ. NO. | 22002-04 |
| SCALE: | AS INDICATED |
| PHASE: | 95% CONSTR. DOC. |
| DATE | 10.14.2022 |

UTILITY PLAN

C4.0

Copyright (C) Korb & Associates Architects Inc.

File: N:\PROJECTS\2022\221136\DWG\Civil Sheets\221136 Civil Docs.dwg Layout: C4.0 - Utility Plan User: amayou Plotted: Nov 21, 2022 - 1:15pm Xrefs:

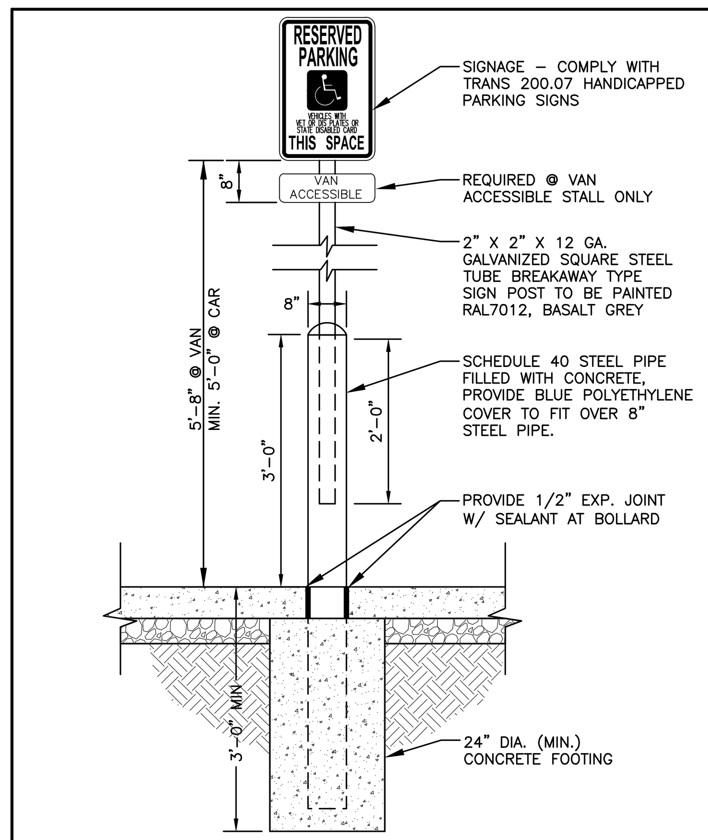


## ADA PARKING STALL W/ BOLLARD

N.T.S.

REV. 7-01-2019

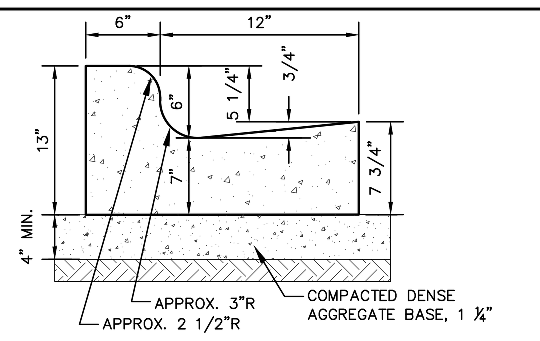


## 18" STANDARD CURB & GUTTER

N.T.S.

REV. 12-17-2018

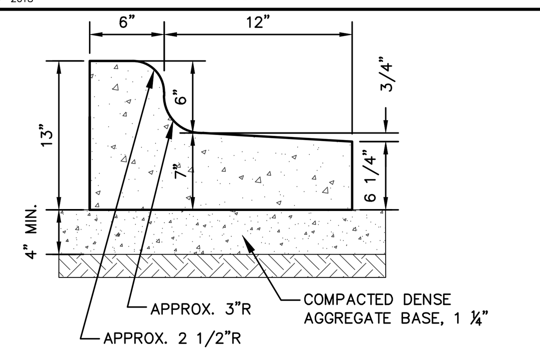


## 18" REJECT CURB & GUTTER

N.T.S.

REV. 12-17-2018

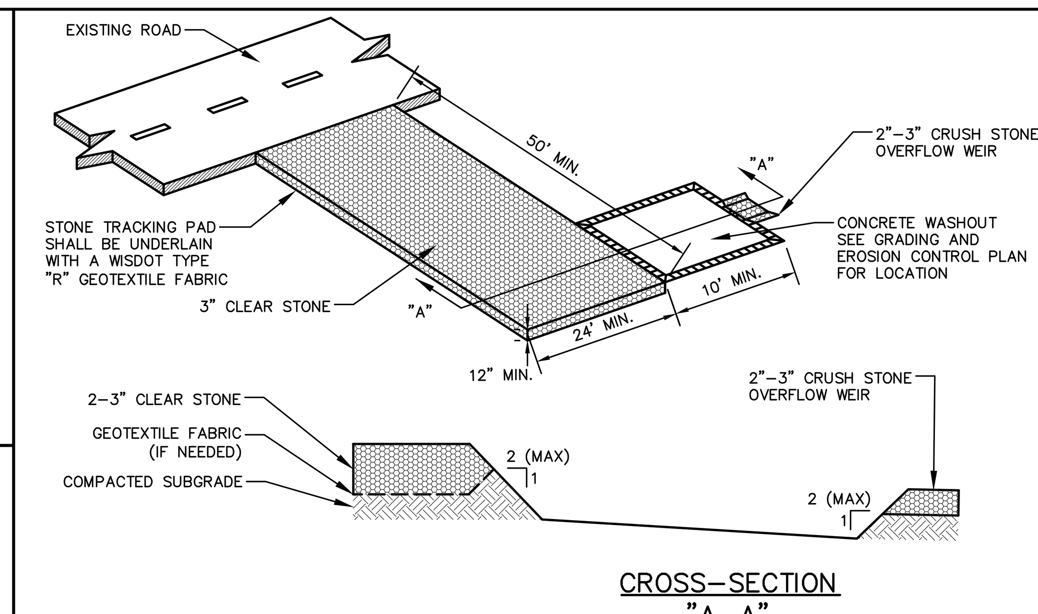


NOTE:
CONTRACTOR TO VERIFY LOCATION WITH OWNER.

## CONSTRUCTION ENTRANCE & CONCRETE WASHOUT

N.T.S.

REV. 12-10-2018

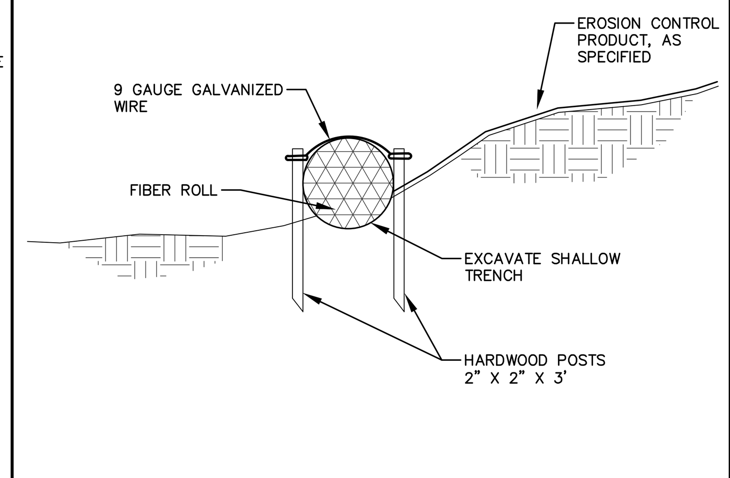


GENERAL NOTES:

1. EXCAVATE A SHALLOW TRENCH SLIGHTLY BELOW BASEFLOW OR A 4" TRENCH ON SLOPE CONTOURS.
2. PLACE THE ROLL IN THE TRENCH AND ANCHOR WITH 2" X 2" POSTS PLACED ON BOTH SIDES OF THE ROLL AND SPACED LATERALLY ON 2' TO 4' CENTERS. TRIM THE TOP OF THE POSTS EVEN WITH THE EDGE OF THE ROLL, IF NECESSARY.
3. NOTCH THE POSTS AND TIE TOGETHER, ACROSS THE ROLL, WITH 9 GAUGE GALVANIZED WIRE OR 1/8" DIAMETER BRAIDED NYLON ROPE.
4. PLACE SOIL EXCAVATED FROM THE TRENCH BEHIND THE ROLL AND HAND TAMP. PLANT WITH SUITABLE HERBACEOUS OR WOODY VEGETATION AS SPECIFIED.

## FIBER SILT SOCK

N.T.S.

REV. 12-7-2018

| ADJUSTING RING HEIGHT | CHIMNEY SEAL |
|---|---|
| 0"-4.5" | DOUBLE PLEATED |
| 4.5"-7.5" | TRIPLE PLEATED |

NOTE:
DROP PIPE AND FITTINGS SHALL BE SAME MATERIAL AND SIZE AS INCOMING SEWER. CONCRETE ENCASEMENT SHALL CURE FOR A MINIMUM OF 24 HOURS BEFORE TRENCH IS BACKFILLED.

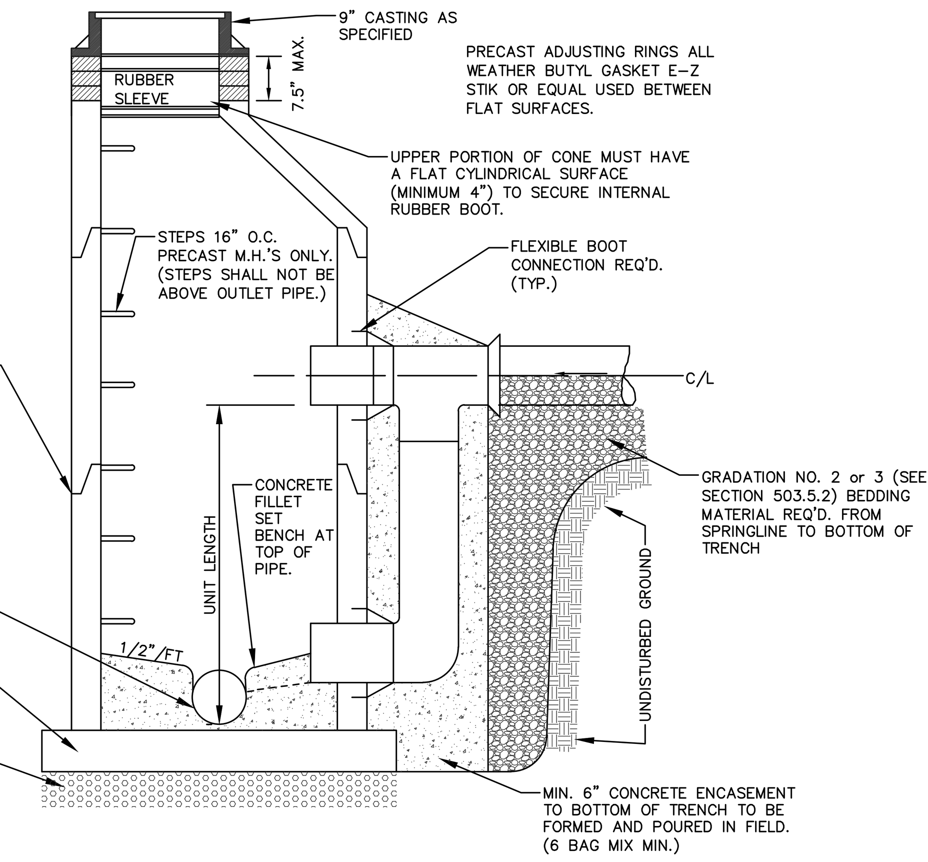


## OUTSIDE DROP SANITARY MANHOLE

N.T.S.

REV. 12-6-2018

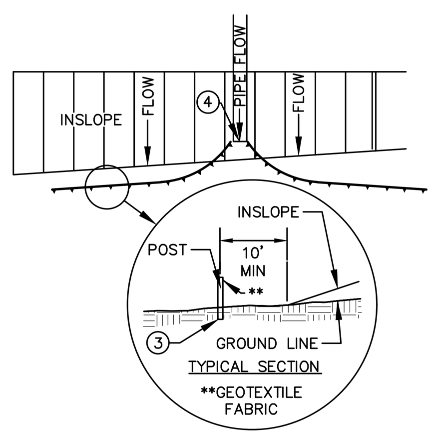


SILT FENCE ALONG SLOPES & OUTFALLS

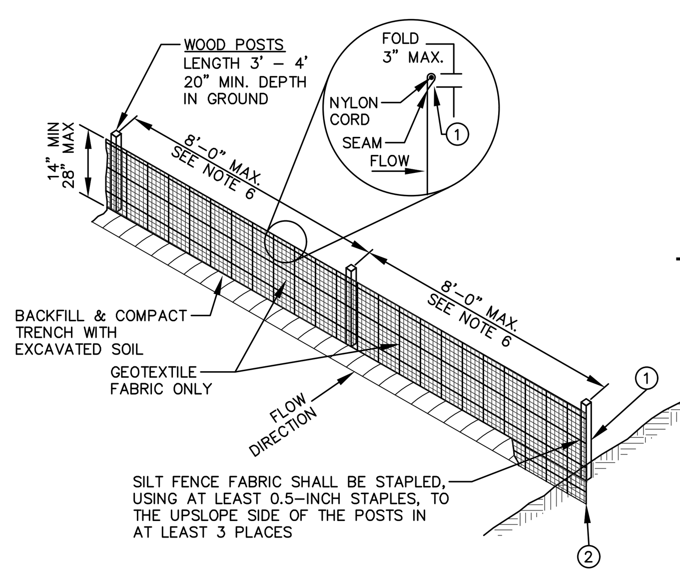


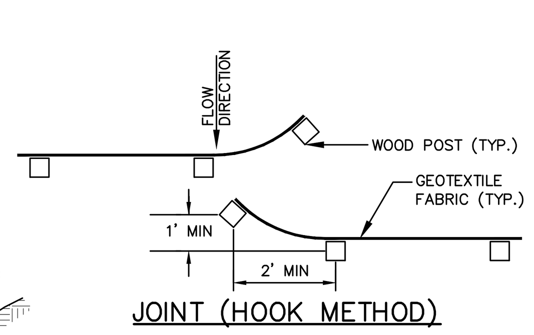


JOINT (HOOK METHOD)

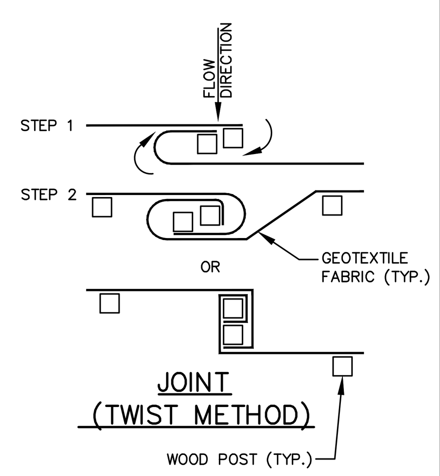


JOINT (TWIST METHOD)

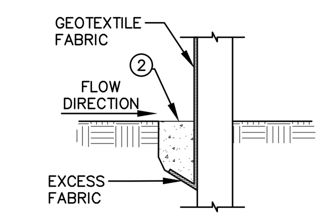


NOTE:
ADDITIONAL POST DEPTH OR TIE BACKS MAY BE REQUIRED IN UNSTABLE SOILS.

TRENCH DETAIL

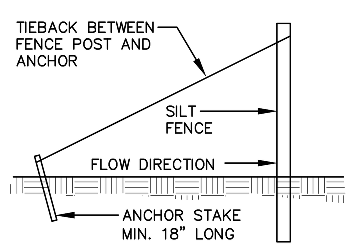


SILT FENCE TIE BACK
(WHEN ADDITIONAL SUPPORT REQUIRED)

GENERAL NOTES:

1. SILT FENCE SHALL BE ANCHORED BY SPREADING AT LEAST 8-INCHES OF FABRIC IN A 4-INCH WIDE AND 6-INCH DEEP TRENCH OR 6-INCH DEEP V-TRENCH ON THE UPSLOPE SIDE OF THE FENCE. TRENCHES SHALL NOT BE EXCAVATED WIDER OR DEEPER THAN NECESSARY FOR PROPER INSTALLATION.
2. FOLD MATERIAL TO FIT TRENCH AND BACKFILL AND COMPACT TRENCH WITH EXCAVATED SOIL.
3. WOOD POSTS SHALL BE A MINIMUM SIZE OF 1.125-INCHES x 1.125-INCHES OF DRIED OAK OR HICKORY.
4. SILT FENCE TO EXTEND ABOVE THE TOP OF PIPE.
5. SILT FENCE CONSTRUCTION AND GEOTEXTILE FABRIC SHALL CONFORM TO WDNR TECHNICAL STANDARD 1056.
6. POST SPACING SHALL BE SELECTED BASED ON GEOTEXTILE FABRIC (8-FEET FOR WOVEN & 3-FEET FOR NON-WOVEN)

## SILT FENCE

N.T.S.

REV. 7-01-2019

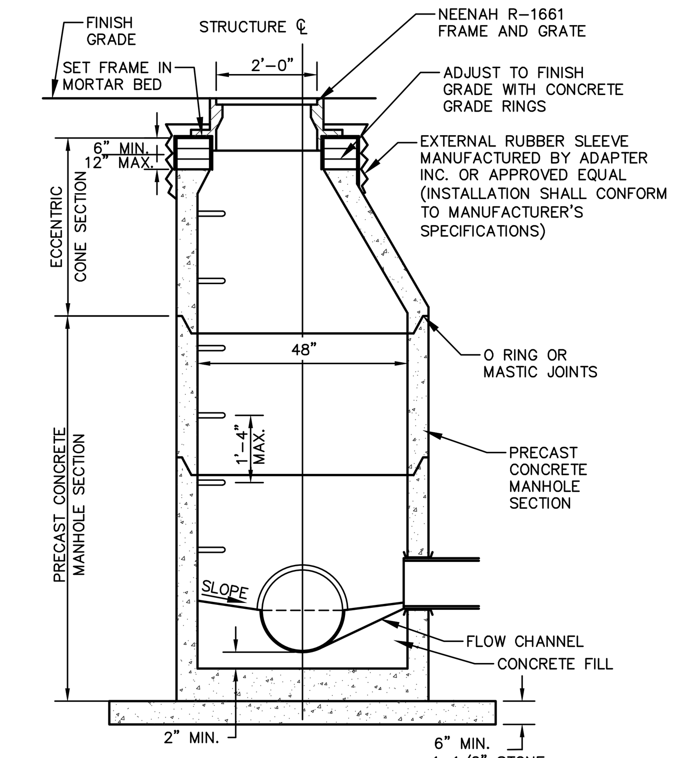


GENERAL NOTES:

1. MANHOLE CONSTRUCTION TO MEET REQUIREMENTS OF ASTM C478.
2. JOINTS SHALL BE WATERTIGHT. USE BUTYL RUBBER GASKET.
3. USE MORTAR FOR PIPE CONNECTIONS.
4. ALL MANHOLES SHALL HAVE RUBBER CHIMNEY BOOT SEALS.

## SANITARY SEWER MANHOLE

N.T.S.

REV. 12-6-2018

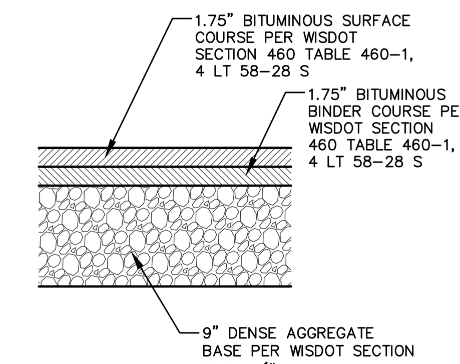


STANDARD ASPHALT PAVEMENT SECTION

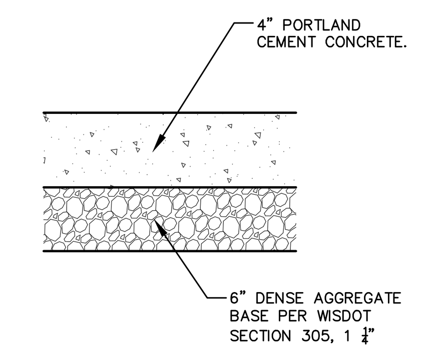


CONCRETE SIDEWALK SECTION

GENERAL NOTES:

1. REFER TO PAVEMENT RECOMMENDATIONS IN THE GEOTECHNICAL INVESTIGATION REPORT, PREPARED BY PSI INTERTEK TITLED "GEOTECHNICAL ENGINEERING SERVICES REPORT" DATED JANUARY 20, 2022. IF THERE ARE ANY DISCREPANCIES BETWEEN THIS DETAIL AND THE PAVEMENT RECOMMENDATIONS PROVIDED IN THE GEOTECHNICAL INVESTIGATION REPORT, THE GEOTECHNICAL REPORT SHALL GOVERN.
2. WISDOT STANDARD SPECIFICATIONS FOR HIGHWAY AND STRUCTURE CONSTRUCTION, INCLUDING SUPPLEMENTAL SPECIFICATIONS, COMPACTION REQUIREMENTS:
   - BITUMINOUS CONCRETE: REFER TO SECTION 460-3.
   - BASE COURSE: REFER TO SECTION 301.3.4.2, STANDARD COMPACTION.
3. CONCRETE EQUIPMENT PADS SHALL HAVE A MINIMUM 8" THICK PORTLAND CEMENTER CONCRETE OVER COMPACTED 6" THICK DENSE GRADED BASE WITH REINFORCEMENT FOR CRACK CONTROL.

## PAVEMENT SECTIONS

N.T.S.

REV. 7-01-2019

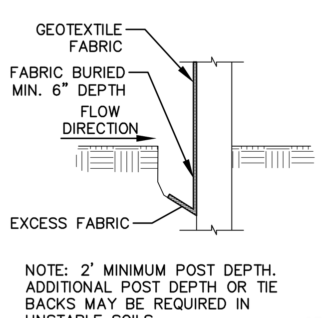


NOTE: 2' MINIMUM POST DEPTH. ADDITIONAL POST DEPTH OR TIE BACKS MAY BE REQUIRED IN UNSTABLE SOILS

TRENCH DETAIL

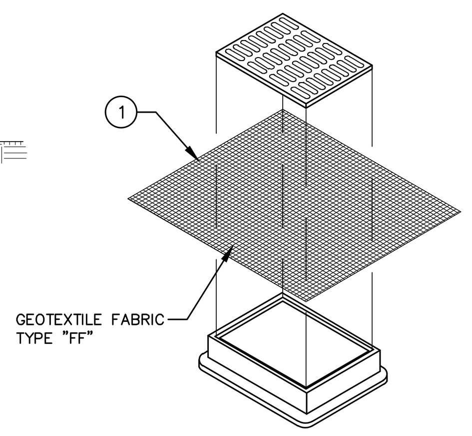


INLET PROTECTION – TYPE "B" WITHOUT CURB BOX

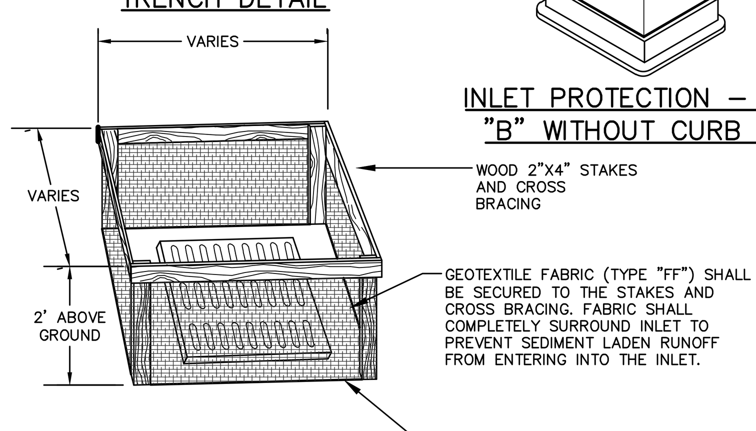


INLET PROTECTION – TYPE "A"

GENERAL NOTES:

INLET PROTECTION DEVICES SHALL BE MAINTAINED OR REPLACED AT THE DIRECTION OF THE ENGINEER.

MANUFACTURED ALTERNATIVES APPROVED AND LISTED ON THE DEPARTMENT'S EROSION CONTROL PRODUCT ACCEPTABILITY LIST MAY BE SUBSTITUTED.

WHEN REMOVING OR MAINTAINING INLET PROTECTION, CARE SHALL BE TAKEN SO THAT SEDIMENT TRAPPED ON THE GEOTEXTILE FABRIC DOES NOT FALL INTO THE INLET. ANY MATERIAL FALLING INTO THE INLET SHALL BE REMOVED IMMEDIATELY.

(1) FINISHED SIZE, INCLUDING FLAP POCKETS WHERE REQUIRED, SHALL EXTEND A MINIMUM OF 10" AROUND THE PERIMETER OF FACILITATE MAINTENANCE OR REMOVAL.

(2) FOR INLET PROTECTION, TYPE "C" (WITH CURB BOX), AN ADDITIONAL 18" OF FABRIC IS WRAPPED AROUND THE WOOD AND SECURED WITH STAPLES. THE WOOD SHALL NOT BLOCK THE ENTIRE HEIGHT OF THE CURB BOX OPENING.

(3) FLAP POCKETS SHALL BE LARGE ENOUGH TO ACCEPT A WOOD 2X4

INSTALLATION NOTES:

TYPE "B" & "C"

TRIM EXCESS FABRIC IN THE FLOW LINE TO WITHIN 3 INCHES OF THE GRATE.

THE CONTRACTOR SHALL DEMONSTRATE A METHOD OF MAINTENANCE, USING A SEWN FLAP, HAND HOLDS OR OTHER METHODS TO PREVENT ACCUMULATED SEDIMENT FROM ENTERING THE INLET.

INSTALLATION NOTES:

TYPE "D"

DO NOT INSTALL INLET PROTECTION TYPE "D" IN INLETS SHALLOWER THAN 30 INCHES, MEASURED FROM THE BOTTOM OF THE INLET TO THE TOP OF THE GRATE.

TRIM EXCESS FABRIC IN THE FLOW LINE TO WITHIN 3 INCHES OF THE GRATE.

THE INSTALLED BAG SHALL HAVE A MINIMUM SIDE CLEARANCE, BETWEEN THE INLET WALLS AND THE BAG, MEASURED AT THE BOTTOM OF THE OVERFLOW HOLES, OF 3 INCHES. WHERE NECESSARY THE CONTRACTOR SHALL CINCH THE BAG, USING PLASTIC ZIP TIES, TO ACHIEVE THE 3 INCHES CLEARANCE. THE TIES SHALL BE PLACED AT A MAXIMUM OF 4 INCHES FROM THE BOTTOM OF THE BAG.

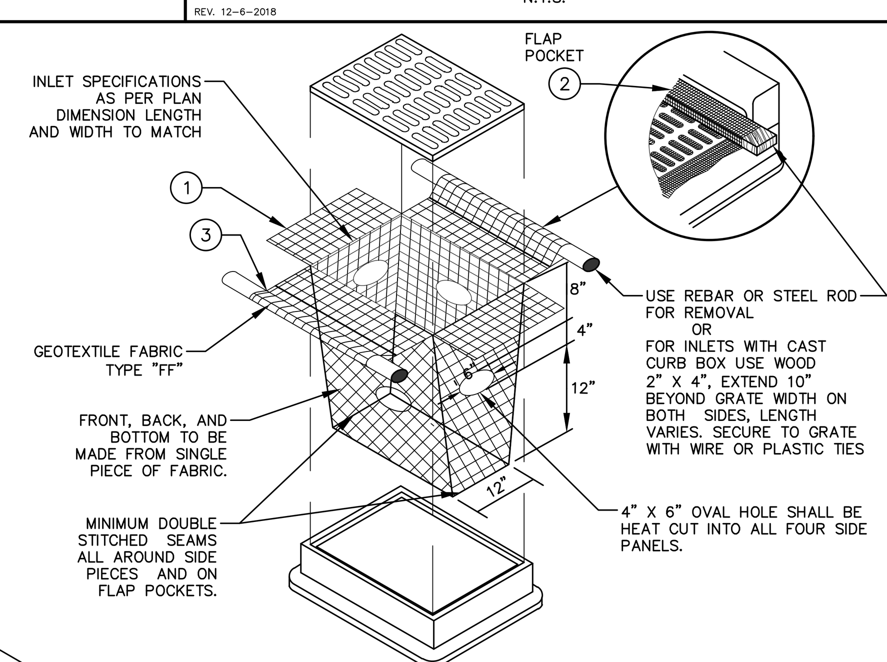


INLET PROTECTION – TYPE "D"

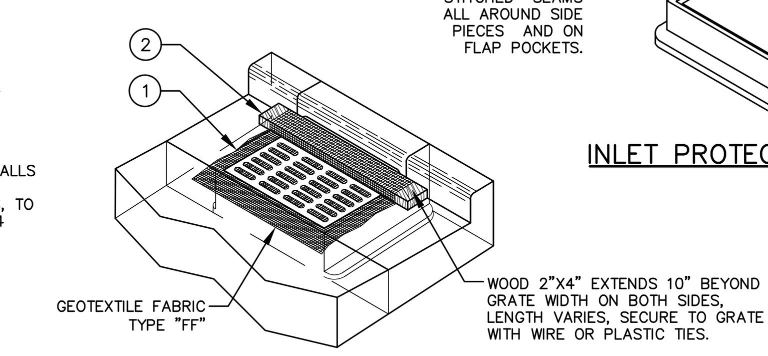


INLET PROTECTION – TYPE "C" WITH CURB BOX

## INLET PROTECTION

N.T.S.

REV. 11-19-2018

NOTE:
CENTER AND/OR EQUALLY SPACE INTERMEDIATE POSTS.

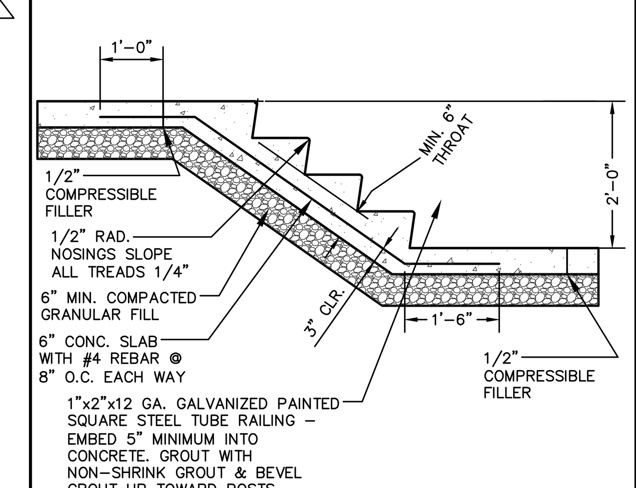


## CONCRETE STAIRS W/ HANDRAIL

N.T.S.

REV. 11-20-2018

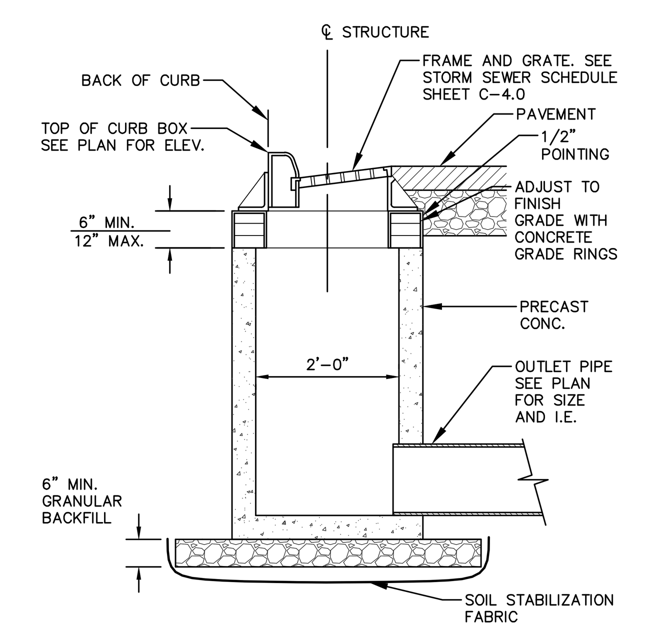


## STORM INLET

N.T.S.

REV. 11-26-2018

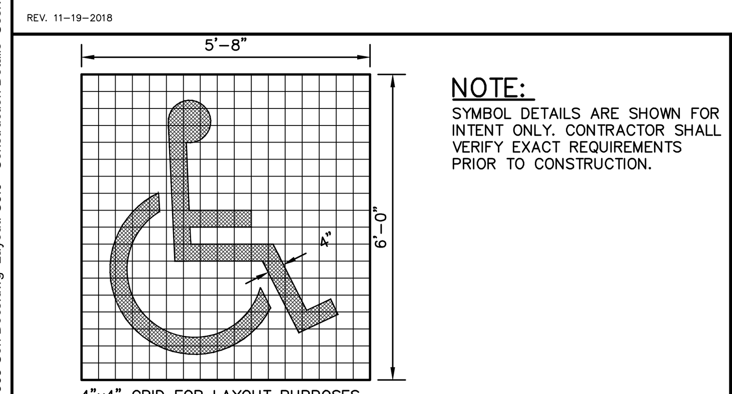


NOTE:
SYMBOL DETAILS ARE SHOWN FOR INTENT ONLY. CONTRACTOR SHALL VERIFY EXACT REQUIREMENTS PRIOR TO CONSTRUCTION.

## ADA PARKING STALL MARKING

N.T.S.

REV. 11-20-2018

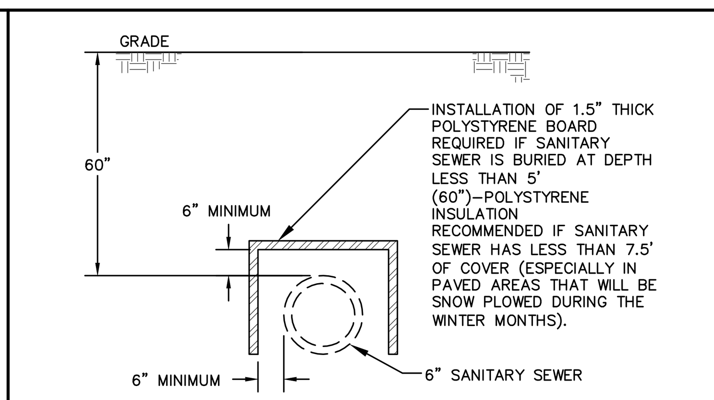


## SANITARY SEWER FROST SEPARATION

N.T.S.

REV. 12-6-2018

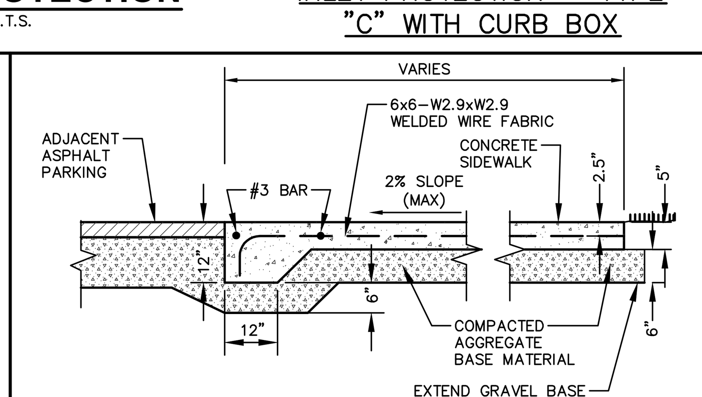


## THICKENED EDGE SIDEWALK - FLUSH

N.T.S.

REV. 07-14-2020

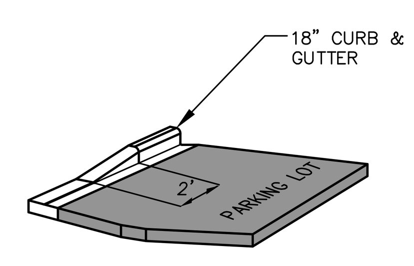


## CURB TAPER

N.T.S.

KORB + ASSOCIATES ARCHITECTS

JSD

[redacted] PROJECT:
BAY CITY LOFTS
216 S. MILITARY AVE.
GREEN BAY, WI

[redacted] OWNER:
GORMAN & COMPANY
200 N Main Street
Oregon, WI 53575

[redacted] ARCHITECT:
KORB + ASSOCIATES ARCHITECTS
648 N. PLANKINTON AVE
SUITE 240
MILWAUKEE, WI 53203

[redacted] CIVIL ENGINEER:
JSD PROFESSIONAL SERVICES, INC.
7402 STONE RIDGE DRIVE
WESTON, WI 54476

[redacted] STRUCTURAL ENGINEER:
SPIRE ENGINEERING, INC.
305 N Plankinton Avenue
Suite 101
Milwaukee, WI 53203

| DATE | REVISION |
|---|---|

DESIGN REVIEW - NOT FOR CONSTRUCTION -

| | |
|---|---|
| PROJ. NO. | 22002-04 |
| SCALE: | AS INDICATED |
| PHASE: | 95% CONSTR. DOC. |
| DATE: | 10.14.2022 |

CONSTRUCTION DETAILS

C5.0

Copyright (C) Korb & Associates Architects Inc.

DIGGERS HOTLINE
Toll Free (800) 242-8511

File: N:\PROJECTS\2022\2211365\DWG\Civil Sheets\2211365 Con Docs.dwg Layout: C5.0 - Construction Details User: amayou Plotted: Nov 21, 2022 - 1:19pm Xref's:

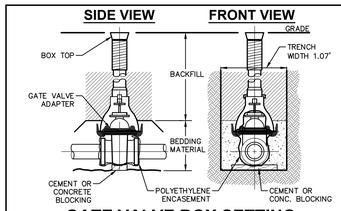


## GATE VALVE BOX SETTING

N.T.S.

REV: 12-04-2018

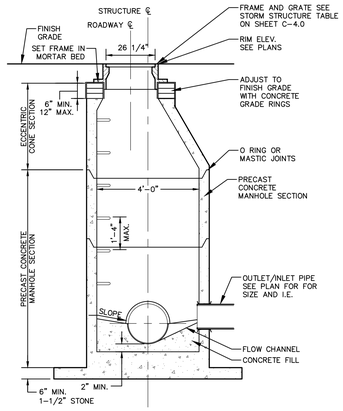


## STORM SEWER MANHOLE

N.T.S.

REV: 12-07-2018

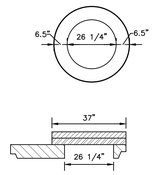


FLAT TOP SLAB

### GENERAL NOTES:

1. MANHOLE CONSTRUCTION TO MEET REQUIREMENTS OF ASTM C478.
2. PROVIDE FLAT TOP SLAB FOR MANHOLES 5' OR LESS IN DEPTH. FLAT TOP SLABS TO BE IN-BELL TYPE.
3. JOINTS SHALL BE WATERTIGHT. USE BUTYL RUBBER GASKET.
4. USE MORTAR FOR PIPE CONNECTIONS.
5. ECCENTRIC CONE SECTION OF MANHOLE TO BE SET OUTSIDE OF VEHICULAR WHEEL PATH NEAR ℄ ROADWAY.

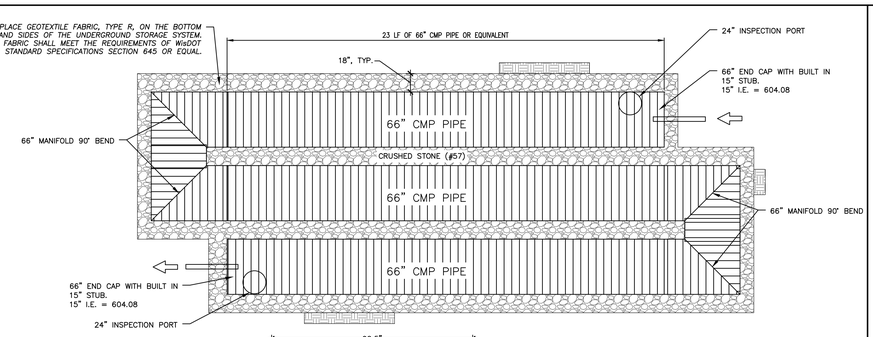


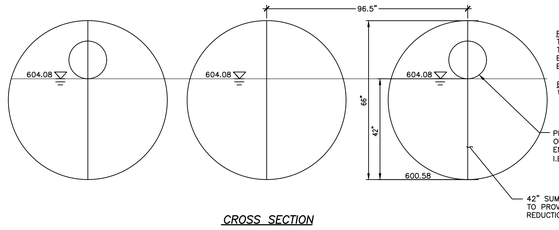


CROSS SECTION

PROPOSED ELEVATIONS
TOP OF STONE: 607.08
TOP OF CHAMBER: 606.08
BOTTOM OF CHAMBER: 600.58
BOTTOM OF STONE: 599.58

BACKFILL
WASHED STONE, NO FINES.

### GENERAL NOTES:

1. PROVIDE CON TECH UNDERGROUND WATER QUALITY STORAGE OR APPROVED EQUAL.
2. CONTRACTOR TO FOLLOW ALL OF MANUFACTURER'S GUIDELINES AND DIRECTIONS FOR INSTALLATION OF UNDERGROUND WATER QUALITY STORAGE SYSTEM. INSTALLATION INSTRUCTIONS REPRESENTED ON DETAIL ARE NOT MEANT TO SUPPLANT DIRECTIONS OF UNDERGROUND WATER QUALITY SYSTEM MANUFACTURER/SUPPLIER.

## UNDERGROUND WATER QUALITY STORAGE

N.T.S.

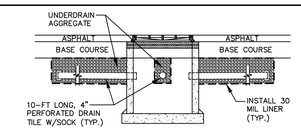


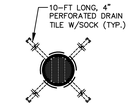


INLET SIZE AND SHAPE MAY VARY

### GENERAL NOTES:

1. UNDERDRAINS SHALL BE INSTALLED ON ALL INLET/CATCH BASINS LOCATED WITHIN IMPERVIOUS PAVEMENTS.
2. UNDERDRAIN CONNECTIONS SHALL BE CORED ONSITE.
3. UNDERDRAIN VERTICAL LOCATION MAY VARY DEPENDING ON STORM SEWER PIPE LOCATION.
4. ALTERNATIVE DESIGN MAY BE SUBSTITUTED IF SHOP DRAWINGS ARE SUBMITTED AND APPROVED BY CITY OF GREEN BAY.

## CATCH BASIN/INLET UNDERDRAIN

N.T.S.

REV: 12-7-2018

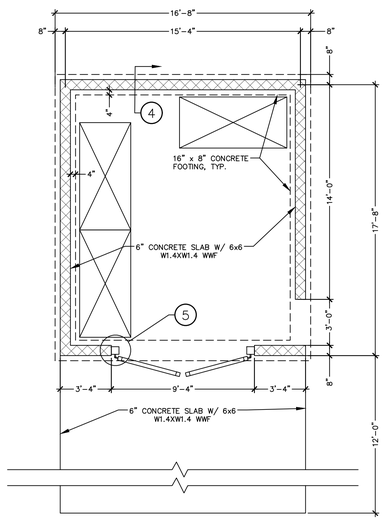


1 TRASH ENCLOSURE PLAN

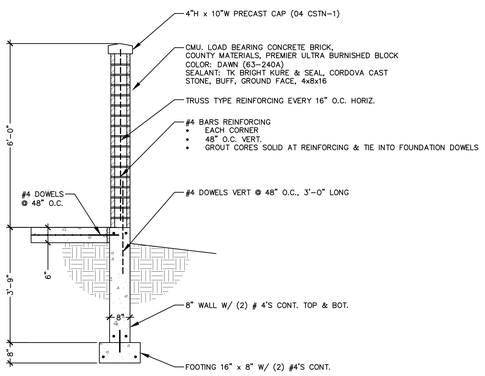


4 TRASH ENCLOSURE WALL SECTION

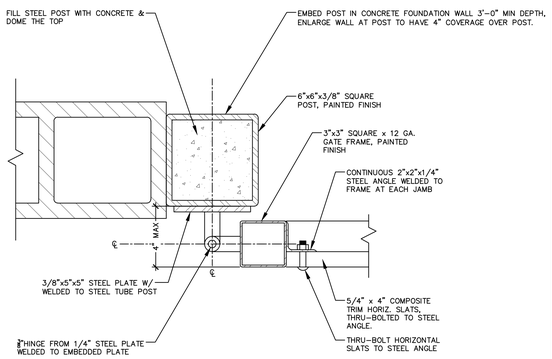


5 TRASH ENCLOSURE GATE JAMB

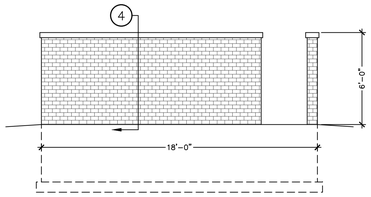


2 TRASH ENCLOSURE SIDE ELEVATION

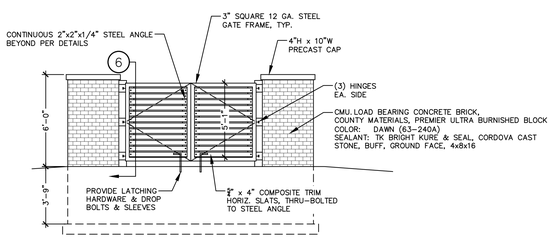


3 TRASH ENCLOSURE FRONT ELEVATION

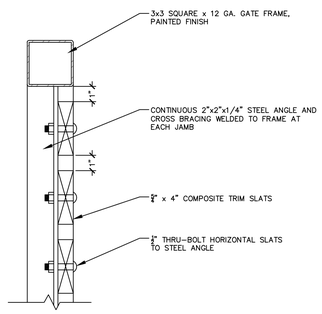


6 TRASH ENCLOSURE GATE HEAD

## TRASH ENCLOSURE DETAIL

N.T.S.

REV: 12-10-2018

MADRAX

MADRAX DIVISION
GRABER MANUFACTURING, INC.
5088 UNDEK DRIVE
WAUNAKEE, WI 53597
P(608) 446-7920, F(608) 849-1886, F(800) 849-1881
WWW.MADRAX.COM, E-MAIL: SALES@MADRAX.COM

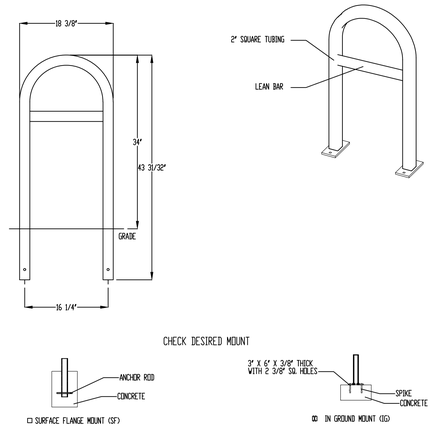


PRODUCT: U200-SF
DESCRIPTION: PHOENIX SINGLE SIDED BIKE RACK
2 BIKE, SURFACE MOUNT

DATE: 10-22-18
ENG: SMC

NOTES:
1. INSTALL BIKE RACKS ACCORDING TO MANUFACTURER'S SPECIFICATIONS.
2. COLOR SHALL BE BLACK (POWDER COATED), SEE MANUFACTURER'S SPECIFICATIONS.
3. SEE SITE PLAN FOR LOCATION OR CONSULT OWNER.

CONFIDENTIAL DRAWING AND INFORMATION IS NOT TO BE COPIED OR DISCLOSED TO OTHERS WITHOUT THE CONSENT OF GRABER MANUFACTURING, INC.
SPECIFICATIONS ARE SUBJECT TO CHANGE WITHOUT NOTICE.

©2018 GRABER MANUFACTURING, INC. ALL PROPRIETARY RIGHTS RESERVED.

## SQUARE 'U' BIKE RACK

N.T.S.

KORB + ASSOCIATES ARCHITECTS

JSD

PROJECT:
BAY CITY LOFTS
216 S. MILITARY AVE.
GREEN BAY, WI

OWNER:
GORMAN & COMPANY
200 N Main Street
Oregon, WI 53575

ARCHITECT:
KORB + ASSOCIATES ARCHITECTS
648 N. PLANKINTON AVE
SUITE 240
MILWAUKEE, WI 53203

CIVIL ENGINEER:
JSD PROFESSIONAL SERVICES, INC.
7402 STONE RIDGE DRIVE
WESTON, WI 54476

STRUCTURAL ENGINEER:
SPIRE ENGINEERING, INC.
305 N Plankinton Avenue
Suite 101
Milwaukee, WI 53203

| DATE | REVISION |
|---|---|

DESIGN REVIEW - NOT FOR CONSTRUCTION -

| | |
|---|---|
| PROJ. NO. | 22002-04 |
| SCALE | AS INDICATED |
| PHASE | 95% CONSTR. DOC. |
| DATE | 10.14.2022 |

CONSTRUCTION DETAILS

C5.1

Copyright (C) Korb & Associates Architects Inc.

DIGGERS HOTLINE
Toll Free (800) 242-8511

File: N:\PROJECTS\2022\221365\DWG\Cnst Sheets\221365 Con Docs.dwg Layout: C5.1 - Construction Details User: amayou Plotted: Nov 21, 2022 - 1:20pm Xref's:

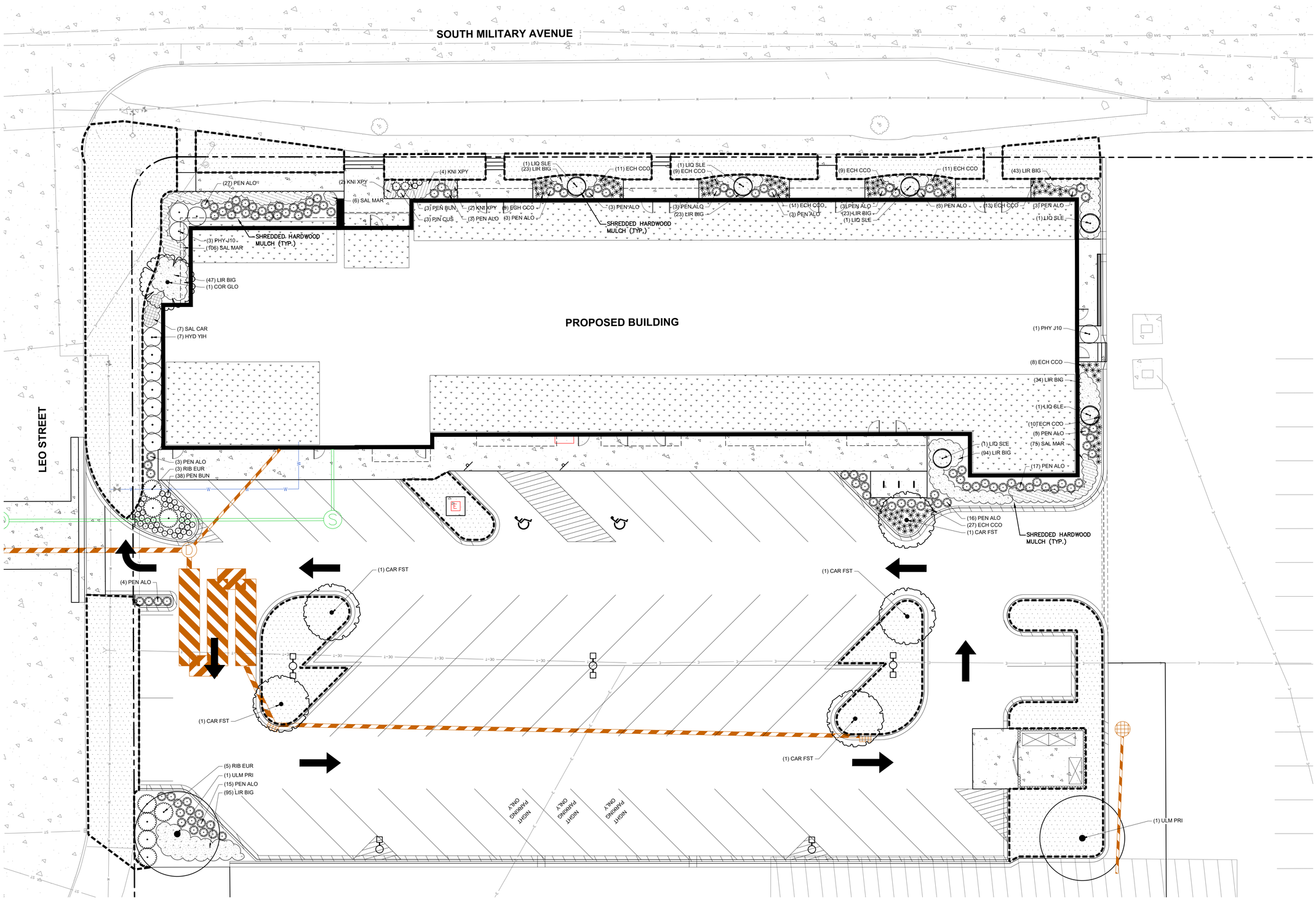


## GENERAL NOTES

1. REFER TO THE EXISTING CONDITIONS SURVEY FOR EXISTING CONDITIONS NOTES AND LEGEND.
2. ALL WORK IN THE ROW SHALL BE IN ACCORDANCE WITH THE MUNICIPAL STANDARD SPECIFICATIONS FOR PUBLIC WORKS CONSTRUCTION.
3. JSD SHALL BE HELD HARMLESS AND DOES NOT WARRANT ANY DEVIATIONS BY THE OWNER/CONTRACTOR FROM THE APPROVED CONSTRUCTION PLANS THAT MAY RESULT IN DISCIPLINARY ACTIONS BY ANY OR ALL REGULATORY AGENCIES.
4. DRAWING FOR REVIEW – NOT FOR CONSTRUCTION UNLESS OTHERWISE NOTED IN THE TITLE BLOCK.
5. THE LANDSCAPE CONTRACTOR SHALL COORDINATE ALL FINE GRADING AND TOPSOILING WITH GENERAL CONTRACTOR
6. REFER TO "LANDSCAPE DETAILS AND NOTES" SHEET FOR ADDITIONAL DETAILS, NOTES AND SPECIFICATION INFORMATION INCLUDING MATERIALS, GUARANTEE AND EXECUTION RELATED TO LANDSCAPE PLAN
7. CONTRACTOR SHALL REVIEW SITE CONDITIONS FOR UTILITY CONFLICTS, DRAINAGE ISSUES, SUBSURFACE ROCK, AND PLANT PLACEMENT CONFLICTS PRIOR TO PLANT INSTALLATION. REPORT ANY CONDITIONS THAT MAY HAVE ADVERSE IMPACT ON PLANTING OPERATIONS TO LANDSCAPE ARCHITECT
8. DO NOT COMMENCE PLANTING OPERATIONS UNTIL ALL ADJACENT SITE IMPROVEMENTS, IRRIGATION INSTALLATION (IF APPLICABLE), AND FINISH GRADING ARE COMPLETE

## LEGEND

KENTUCKY BLUEGRASS BLEND (SOD)

north

SCALE IN FEET
10' 0 10'

DIGGERS HOTLINE
Toll Free (800) 242-8511

KORB + ASSOCIATES ARCHITECTS

JSD

PROJECT:
BAY CITY LOFTS
216 S. MILITARY AVE.
GREEN BAY, WI

OWNER:
GORMAN & COMPANY
200 N Main Street
Oregon, WI 53575

ARCHITECT:
KORB + ASSOCIATES ARCHITECTS
648 N. PLANKINTON AVE
SUITE 240
MILWAUKEE, WI 53203

CIVIL ENGINEER:
JSD PROFESSIONAL SERVICES, INC.
7402 STONE RIDGE DRIVE
WESTON, WI 54476

STRUCTURAL ENGINEER:
SPIRE ENGINEERING, INC.
305 N Plankinton Avenue
Suite 101
Milwaukee, WI 53203

| DATE | REVISION |
|---|---|

DESIGN REVIEW - NOT FOR CONSTRUCTION -

| | |
|---|---|
| PROJ. NO. | 22002-04 |
| SCALE | AS INDICATED |
| PHASE | 95% CONSTR. DOC. |
| DATE | 10.14.2022 |

LANDSCAPE PLAN

L1.0

Copyright (C) Korb & Associates Architects Inc.

File: N:\PROJECTS\2022\22113\65\DWG\Landscape Sheets\22113\65 Landscape Plans.dwg Layout: L1.0 User: amayou Plotted: Nov 21, 2022 - 2:13pm Xrefs:

## LANDSCAPE CALCULATIONS

| | REQUIRED | PROVIDED |
|---|---|---|
| INTERIOR PARKING LOT LANDSCAPING<br>10% OF INTERIOR PARKING LOT DEVOTED TO LANDSCAPE PLANTINGS | 2,349 SF<br>(23,486)(.10)=2,348.6 | 3,187 SF |
| 25–100 PARKING SPACES (1 TREE PER 10 SPACES) | 6 TREES<br>(54 SPACES/10=5.4) | 6 TREES |
| LANDSCAPE ISLANDS AT THE END OF EACH PARKING ROW | YES | YES |
| MINIMUM INTERIOR ISLAND DIMENSION 10' WIDTH AND 15' LENGTH | YES | NO |
| ISLANDS PLANTED W/ GROUND COVER OR SOD AND MINIMUM 1 TREE PER ISLAND | YES | YES |
| PERIMETER PARKING LOT LANDSCAPING<br>SCREEN PARKING LOT FROM PUBLIC STREETS AND SIDEWALKS, OR PUBLIC OPEN SPACE AND ADJACENT PROPERTIES | YES | YES |
| BUILDING FOUNDATION LANDSCAPING<br>PLANTED WITH ORNAMENTAL PLANT MATERIAL (TREES, FLOWERING SHRUBS, PERENNIALS AND GROUNDCOVERS) | YES | YES |
| GENERAL REQUIREMENTS<br>TREE SPECIES MAY NOT BE ONE SPECIES SHALL NOT MAKE UP MORE THAN 50% OF THE TOTAL TREE PLANTINGS | NO MORE THAN 50% PER SPECIES OF TREE | YES |
| MINIMUM PLANTING SIZES:<br>DECIDUOUS TREES<br>ORNAMENTAL DECIDUOUS TREES<br>EVERGREEN TREES<br>SHRUBS | <br>2" CALIPER<br>1.5" CALIPER<br>6' IN HEIGHT<br>#5 GALLON | YES |

## PLANT SCHEDULE

| TREES | CODE | BOTANICAL / COMMON NAME | ROOT CONDITION | SIZE AT PLANTING | | QTY |
|---|---|---|---|---|---|---|
| | CAR FST | Carpinus betulus 'Fastigiata' / Pyramidal European Hornbean | B & B | 3"Cal | | 5 |
| | COR GLO | Cornus mas 'Golden Glory' / Golden Glory Cornelian Cherry | B & B | 2"Cal | | 1 |
| | LIQ SLE | Liquidambar styraciflua `Slender Silhouette` / Slender Silhouette Sweet Gum | B & B | 3"Cal | | 6 |
| | ULM PRI | Ulmus americana 'Princeton' / Princeton American Elm | B & B | 3"Cal | | 2 |
| SHRUBS | CODE | BOTANICAL / COMMON NAME | CONT | SIZE AT PLANTING | | QTY |
| | HYD YIH | Hydrangea paniculata 'SMNHPPH' TM / Limelight Prime Panicle Hydrangea | #05/5 gal. | | | 7 |
| | PHY J10 | Physocarpus opulifolius 'Jefam' TM / Amber Jubilee Ninebark | #05/5 gal. | | | 4 |
| | PIN CUS | Pinus mugo 'Valley Cushion' / Valley Cushion Mugo Pine | #05/5 gal. | | | 3 |
| | RIB EUR | Ribes alpinum 'Europa' / Europa Alpine Currant | #05/5 gal. | | | 8 |
| ORNAMENTAL GRASSES | CODE | BOTANICAL / COMMON NAME | CONT | SIZE AT PLANTING | | QTY |
| | PEN ALO | Pennisetum alopecuroides / Fountain Grass | #01/1 gal. | | | 111 |
| | PEN BUN | Pennisetum alopecuroides 'Little Bunny' / Little Bunny Fountain Grass | #01/1 gal. | | | 41 |
| PERENNIALS | CODE | BOTANICAL / COMMON NAME | CONT | SIZE AT PLANTING | | QTY |
| | ECH CCO | Echinacea x 'Cleopatra' / Cleopatra Butterfly Coneflower | #01/1 gal. | | | 118 |
| GROUND COVERS | CODE | BOTANICAL / COMMON NAME | CONT | SIZE AT PLANTING | SPACING | QTY |
| | LIR BIG | Liriope muscari 'Big Blue' / Big Blue Lilyturf | #01 (gal) | | 15" o.c. | 382 |
| PERENNIALS | CODE | BOTANICAL / COMMON NAME | CONT | SIZE AT PLANTING | SPACING | QTY |
| | KNI XPY | Kniphofia x 'Backdraft' TM / Backdraft Pyromania Red Hot Poker | #01/1 Gal. | | 30" o.c. | 8 |
| | SAL CAR | Salvia nemorosa 'Caradonna' / Cardonna Meadow Sage | #01/1 Gal. | | 24" o.c. | 7 |
| | SAL MAR | Salvia nemorosa 'Haeumanarc' TM / Marcus Meadow Sage | #01/1 Gal. | | 12" o.c. | 203 |

## CONTRACTOR AND OWNER RESPONSIBILITY NOTES

1. GUARANTEE: THE CONTRACTOR SHALL GUARANTEE ALL PLANTS THROUGH ONE (1) YEAR AFTER ACCEPTANCE BY THE OWNER'S REPRESENTATIVE. PLANTS SHALL BE ALIVE AND IN HEALTHY AND FLOURISHING CONDITION AT THE END OF THE GUARANTEE PERIOD. THE CONTRACTOR SHALL REPLACE (AT NO COST TO OWNER) ANY PLANTS THAT ARE DEAD OR NOT IN A VIGOROUS THRIVING CONDITION. REPLACEMENT PLANTS SHALL BE OF THE SAME KIND AND SIZE AS ORIGINALLY SPECIFIED UNLESS OTHERWISE DIRECTED BY OWNER'S REPRESENTATIVE. RESTORE BEDS AS NECESSARY FOLLOWING PLANT REPLACEMENT, INCLUDING BUT NOT LIMITED TO BEDDING, EDGING, MULCH, ETC. REPLACE PLANTS DAMAGED AT TIME OF PLANTING. REPAIR AREAS DISTURBED IN ANY WAY DURING PLANT REPLACEMENT AT NO COST TO OWNER. CONTRACTOR SHALL PROVIDE A ONE (1)–YEAR STRAIGHTENING GUARANTEE FOR ALL TREES.
2. CONTRACTOR IS RESPONSIBLE FOR STAKING THE PLANT MATERIALS FOR REVIEW BY OWNER'S REPRESENTATIVE PRIOR TO DIGGING AND PLACEMENT AND SHALL COORDINATE ALL FINE GRADING AND RESTORATION WITH THE GRADING CONTRACTOR.
3. MAINTENANCE: (CONTRACTOR) FOR ALL PLANTINGS, SEEDED AND/OR SODDED LAWN AREAS: THE CONTRACTOR SHALL MAINTAIN ALL PLANTINGS AND LAWN AREAS FOR A MINIMUM TIME PERIOD OF 60 DAYS, UNTIL FINAL ACCEPTANCE BY OWNER'S REPRESENTATIVE. THE CONTRACTOR IS RESPONSIBLE FOR ADEQUATELY WATERING PLANTS AND LAWN/TURFGRASS DURING THIS 60 DAY ESTABLISHMENT PERIOD. CONTRACTOR IS RESPONSIBLE FOR THE ESTABLISHMENT OF HEALTHY VIGOROUS PLANT MATERIALS AND LAWN/TURFGRASS GROWTH. CONTRACTOR IS ALSO RESPONSIBLE FOR ANY PRUNING OF PLANT MATERIALS, AND SHAPING AND/OR REPLACEMENT OR SUPPLEMENT OF DEFICIENT SHREDDED HARDWOOD BARK MULCH DURING THIS PERIOD. LONG TERM PLANT MATERIALS AND LAWN/TURFGRASS MAINTENANCE AND ANY PROGRAM FOR SUCH IS THE RESPONSIBILITY OF THE OWNER. ALL PLANTINGS AND LAWN/TURFGRASS AREAS SHALL BE MAINTAINED IN A MANICURED CONDITION UNTIL THE TIME WHEN THE OWNER'S ACCEPTANCE IS GIVEN.
4. MAINTENANCE: (OWNER) THE OWNER IS RESPONSIBLE FOR THE CONTINUED MAINTENANCE, REPAIR AND REPLACEMENT OF ALL LANDSCAPING MATERIALS AND WEED BARRIER FABRIC AS NECESSARY FOLLOWING THE ONE (1) YEAR CONTRACTOR GUARANTEE PERIOD.

## GENERAL NOTES

1. GENERAL: ALL WORK IN THE R–O–W AND PUBLIC EASEMENTS SHALL BE IN ACCORDANCE WITH LOCAL MUNICIPAL REQUIREMENTS. JSD SHALL BE HELD HARMLESS AND DOES NOT WARRANT ANY DEVIATIONS BY THE OWNER/CONTRACTOR FROM THE APPROVED CONSTRUCTION PLANS THAT MAY RESULT IN DISCIPLINARY ACTIONS BY ANY OR ALL REGULATORY AGENCIES. LOCATE ALL UTILITIES PRIOR TO CONSTRUCTION. THE CONTRACTOR IS RESPONSIBLE FOR REPAIRING ANY DAMAGE DONE TO UTILITIES. CONTRACTOR MUST CALL 1–800–242–8511 FOR UTILITY LOCATIONS AT LEAST THREE DAYS PRIOR TO DIGGING. HAND DIG AND INSTALL ALL PLANTS THAT ARE NEAR EXISTING UTILITIES. PROTECT PREVIOUSLY INSTALLED WORK OF OTHER TRADES. CONTRACTOR IS RESPONSIBLE FOR STAKING THE PLANT MATERIALS FOR REVIEW BY OWNER PRIOR TO DIGGING AND PLACEMENT AND SHALL COORDINATE ALL FINE GRADING AND RESTORATION WITH THE GRADING CONTRACTOR.
2. DELIVERY AND HANDLING: DO NOT DELIVER MORE PLANT MATERIALS THAN CAN BE PLANTED IN ONE DAY, UNLESS ADEQUATE, APPROPRIATE AND SECURE STORAGE IS PROVIDED AND APPROVED BY OWNER'S REPRESENTATIVE. AT ALL TIMES, PROTECT ALL PLANT MATERIALS FROM WIND AND DIRECT SUN. DELIVER PLANTS WITH LEGIBLE IDENTIFICATION LABELS. PROTECT PLANTS DURING DELIVERY AND DO NOT PRUNE PRIOR TO DELIVERY. ALL TREES AND SHRUBS SHALL BE PLANTED ON THE DAY OF DELIVERY; IF THIS IS NOT POSSIBLE, PROTECT THE PLANT MATERIALS NOT PLANTED BY STORING THEM IN A SHADED, SECURE AREA, PROTECTING THE ROOT MASS WITH WET SOIL, MULCH, HAY OR OTHER SUITABLE MEDIUM. CONTRACTOR TO KEEP ALL PLANT MATERIALS ADEQUATELY WATERED TO PREVENT ROOT DESICCATION. DO NOT REMOVE CONTAINER GROWN STOCK FROM CONTAINERS BEFORE TIME OF PLANTING. DO NOT PICK UP CONTAINER OR BALLED PLANTS BY STEM OR ROOTS. ALL PLANTS SHALL BE LIFTED AND HANDLED FROM THE BOTTOM OF THE CONTAINER OR BALL. PERFORM ACTUAL PLANTING ONLY WHEN WEATHER AND SOIL CONDITIONS ARE SUITABLE IN ACCORDANCE WITH LOCALLY ACCEPTED BEST HORTICULTURAL PRACTICES.
3. MATERIALS – PLANTS: ALL PLANTS SHALL CONFORM TO THE LATEST VERSION OF THE AMERICAN STANDARD FOR NURSERY STOCK ANSI Z60.1. PLANTS SHALL BE TRUE TO SPECIES AND VARIETY SPECIFIED AND NURSERY GROWN IN ACCORDANCE WITH GOOD HORTICULTURAL PRACTICES UNDER CLIMATIC CONDITIONS SIMILAR TO THOSE IN THE LOCALITY OF THE PROJECT FOR AT LEAST 2 YEARS. PLANTS SHALL BE FRESHLY DUG (DURING THE MOST RECENT FAVORABLE HARVEST SEASON). PLANTS SHALL BE SO TRAINED IN DEVELOPMENT AND APPEARANCE AS TO BE UNQUESTIONABLY SUPERIOR IN FORM, COMPACTNESS, AND SYMMETRY. PLANTS SHALL BE SOUND, HEALTHY, VIGOROUS, WELL BRANCHED AND DENSELY FOLIATED WHEN IN LEAF, AND FREE OF DISEASE AND INSECTS (ADULT EGGS, PUPAE OR LARVAE). THEY SHALL HAVE HEALTHY, WELL–DEVELOPED ROOT SYSTEMS AND SHALL BE FREE FROM PHYSICAL DAMAGE OR OTHER CONDITIONS THAT WOULD PREVENT THRIVING GROWTH OR PREMATURE MORTALITY. PLANTS SHALL BE OF THE HIGHEST QUALITY, POSSESS TYPICAL GROWTH HABITS AND FORM FOR THEIR SPECIES AND BE FREE OF INJURY. PARKWAY TREES AND PARKING LOT TREES SHALL HAVE A MINIMUM BRANCHING HEIGHT OF SIX (6) FEET ABOVE THE GROUND TO ALLOW ADEQUATE VISUAL AND PHYSICAL CLEARANCE.
4. PRUNING: THE CONTRACTOR SHALL PRUNE ALL TREES AND REPAIR ANY INJURIES THAT OCCURRED DURING THE PLANTING PROCESS. DOUBLE LEADERS, DEAD BRANCHES, AND LIMBS DAMAGED OR BROKEN DURING THE PLANTING PROCESS, SHALL BE PRUNED. THIS SHALL BE THE ONLY PRUNING ALLOWED AT PLANTING. PRUNING SHALL CONFORM TO THE LATEST VERSION OF THE AMERICAN STANDARD FOR TREE CARE OPERATIONS, ANSI A300. PRUNE TREES IN ACCORDANCE WITH NAA GUIDELINES. DO NOT TOP TREES. PRUNE SHRUBS ACCORDING TO STANDARD HORTICULTURAL PRACTICES. ON CUTS OVER 3/4" IN DIAMETER AND BRUISES OR SCARS ON BARK, TRACE THE INJURED CAMBIUM LAYER BACK TO LIVING TISSUE AND REMOVE. SMOOTH AND SHAPE WOUNDS SO AS NOT TO RETAIN WATER. TREAT THE AREA WITH AN APPROVED INCONSPICUOUS LATEX BASED ANTISEPTIC TREE PAINT, IF PRUNING OCCURS "IN SEASON". DO NOT PRUNE ANY OAK TREES DURING THE MONTHS FROM APRIL TO OCTOBER.
5. CLEANUP: THE WORK AREA SHALL BE KEPT SAFE AND NEAT AT ALL TIMES. DISPOSED OF EXCESS SOIL. REMOVE ALL CUTTINGS AND WASTE MATERIALS. SOIL AND BRANCHES. BIND AND WRAP THESE MATERIALS, ANY REJECTED PLANTS, AND ANY OTHER DEBRIS RESULTING FROM ALL PLANTING TASKS AND PROMPTLY CLEAN UP AND REMOVE FROM THE PROJECT SITE. UNDER NO CIRCUMSTANCES SHALL THE ACCUMULATION OF SOIL, BRANCHES OR OTHER DEBRIS BE ALLOWED UPON A PUBLIC PROPERTY IN SUCH A MANNER AS TO RESULT IN A PUBLIC SAFETY HAZARD OR DAMAGE. LIKEWISE, UNDER NO CIRCUMSTANCES SHALL ANY DEBRIS OR INCIDENTAL MATERIALS BE ALLOWED UPON ADJACENT PRIVATE PROPERTY.
6. ANY SUBSTITUTIONS IN PLANT TYPE, LOCATION, OR SIZE SHALL BE APPROVED BY LANDSCAPE ARCHITECT PRIOR TO INSTALLATION.
7. CONTRACTOR TO VERIFY PLANT MATERIAL QUANTITIES AND SQUARE FOOTAGES. QUANTITIES SHOWN ON PLAN TAKE PRECEDENCE OVER THOSE ON SCHEDULE.

## LANDSCAPE MATERIAL NOTES

1. MATERIALS – PLANTING MIXTURE: ALL HOLES EXCAVATED FOR TREES, SHRUBS, PERENNIALS AND ORNAMENTAL GRASSES SHALL BE BACKFILLED WITH TWO (2) PARTS TOPSOIL, ONE (1) PART SAND AND ONE (1) PART COMPOST. SOIL MIXTURE SHALL BE WELL BLENDED PRIOR TO INSTALLATION.
2. MATERIALS – TOPSOIL: TOPSOIL TO BE CLEAN, FRIABLE LOAM FROM A LOCAL SOURCE, FREE FROM STONES OR DEBRIS OVER 3/4" IN DIAMETER, AND FREE FROM TOXINS OR OTHER DELETERIOUS MATERIALS. TOPSOIL SHALL HAVE A pH VALUE BETWEEN 6 AND 7. TOPSOIL AND PLANTING SOIL SHALL BE TESTED TO ENSURE CONFORMANCE WITH THESE SPECIFICATIONS AND SHALL BE AMENDED TO MEET THESE SPECIFICATIONS. PROVIDE TEST RESULTS TO OWNER'S REPRESENTATIVE PRIOR TO PLACEMENT. DO NOT PLACE FROZEN OR MUDDY TOPSOIL. APPLY SOIL AMENDMENTS TO ALL LANDSCAPE AREAS PER SOIL TEST.
3. MATERIALS – SHREDDED HARDWOOD BARK MULCH: ALL PLANTING AREAS LABELED ON PLAN SHALL RECEIVE CERTIFIED WEED FREE SHREDDED HARDWOOD BARK MULCH INSTALLED TO A MINIMUM AND CONSISTENT DEPTH OF 3–INCHES. SHREDDED HARDWOOD BARK MULCH SIZE & COLOR TO BE APPROVED BY OWNER'S REPRESENTATIVE PRIOR TO INSTALLATION. FERTILIZER SHALL BE IN ACCORDANCE WITH APPLICABLE LOCAL, COUNTY AND STATE REQUIREMENTS. SHREDDED HARDWOOD BARK MULCH AREAS SHALL NOT RECEIVE WOVEN WEED BARRIER FABRIC.
4. MATERIALS – TREE & SHRUB RINGS: ALL TREES AND/OR SHRUBS PLANTED IN SEEDED LAWN AREAS TO BE INSTALLED WITH A MINIMUM 4' DIAMETER SHREDDED HARDWOOD BARK MULCH TREE RING SPREAD TO A CONSISTENT DEPTH OF 3–INCHES. ALL TREE RINGS SHOULD BE INSTALLED WITH A 5" DEPTH SHOVEL CUT EDGE, ANGLED 45 DEGREES INTO SOIL AT A 5' DIAMETER ABOUT THE CENTER OF THE TREE PLANTING. A PRE–EMERGENT GRANULAR HERBICIDE WEED–PREVENTER SHOULD BE MIXED WITH MULCH USED TO INSTALL TREE RING AS WELL AS TOPICALLY APPLIED TO COMPLETED INSTALLATION OF TREE RING.
5. MATERIALS – TREE PROTECTION: ALL TREES TO BE INSTALLED WITH LDPE TREE GUARDS AS MANUFACTURED BY A.M. LEONARD HORTICULTURAL TOOL & SUPPLY CO., OR APPROVED EQUAL.
6. MATERIALS – (ALTERNATE 1): TREE WATERING BAGS: ALL TREES TO BE INSTALLED WITH ONE (1) WATER BAG. PRODUCT TO BE "TREE GATOR ORIGINAL SLOW RELEASE WATERING BAG," PRODUCT NO. 98183–R OR APPROVED EQUAL. INSTALL IN ACCORDANCE WITH MANUFACTURER'S RECOMMENDATIONS.

## SEEDING & SODDING NOTES

1. MATERIALS – TURFGRASS SEED: DISTURBED LAWN AREAS LABELED ON PLAN AS SUCH, SHALL RECEIVE 6" OF TOPSOIL AND EARTH CARPET'S "MADISON PARKS" GRASS SEED, OR EQUIVALENT AS APPROVED BY THE OWNER'S REPRESENTATIVE, INSTALLED PER MANUFACTURER'S RECOMMENDATIONS. IN ADDITION TO TURFGRASS SEED, ANNUAL RYE SHALL BE APPLIED TO ALL DISTURBED AREAS AT A RATE OF 1 1/2 LBS PER 1000 SQUARE FEET. FERTILIZE AND MULCH PER MANUFACTURER'S RECOMMENDATIONS. MULCH SHALL BE CERTIFIED NOXIOUS WEED SEED–FREE
2. MATERIALS – SOD: DISTURBED LAWN AREAS LABELED ON PLAN AS SUCH, SHALL RECEIVE 6" OF TOPSOIL AND A PREMIUM GRADE TURFGRASS SOD. ONLY IMPROVED TYPES OF SOD (ELITE) ARE ACCEPTABLE. TURFGRASS SHALL BE MACHINE CUT AT A UNIFORM THICKNESS OF .60 INCH, PLUS OR MINUS .25 INCH, AT TIME OF CUTTING. MEASUREMENT FOR THICKNESS SHALL EXCLUDE TOP GROWTH AND THATCH. LARGE ROLL TURFGRASS SOD SHALL BE CUT TO THE SUPPLIER'S STANDARD WIDTH (36–48 INCHES) AND LENGTH. BROKEN PADS AND TORN OR UNEVEN ENDS WILL NOT BE ACCEPTABLE. STANDARD SIZE SECTIONS OF TURGRASS SOD SHALL BE STRONG ENOUGH SO THAT THEY CAN BE PICKED UP AND HANDLED WITHOUT DAMAGE. TURFGRASS SOD SHALL NOT BE HARVESTED OR TRANSPLANTED WHEN MOISTURE CONTENT IS EXCESSIVELY DRY OR WET, AS THIS MAY ADVERSELY AFFECT ITS SURVIVAL. POST–PLANT IRRIGATION WILL BE NECESSARY TO ENSURE SOD STAYS ALIVE AND ROOTS INTO SOIL. THE CONTRACTOR IS RESPONSIBLE FOR WATERING SOD UNTIL TIME OF ACCEPTANCE BY THE OWNER. TURFGRASS SOD SHALL BE HARVESTED, DELIVERED, AND INSTALLED/TRANSPLANTED WITHIN A PERIOD OF 24 HOURS. TURFGRASS SOD SHALL BE RELATIVELY FREE OF THATCH, UP TO 0.5 INCH ALLOWABLE (UNCOMPRESSED). TURFGRASS SOD SHALL BE REASONABLY FREE (10 WEEDS/100 SQ. FT.) OF DISEASES, NEMATODES AND SOIL–BORNE INSECTS. ALL TURFGRASS SOD SHALL BE FREE OF GRASSY AND BROAD LEAF WEEDS AND WEED SEED. THE SOD SUPPLIER SHALL MAKE RECOMMENDATIONS TO THE CONTRACTOR REGARDING WATERING SCHEDULE. THE WATERING SCHEDULE SHOULD BEGIN IMMEDIATELY AFTER SOD IS INSTALLED.

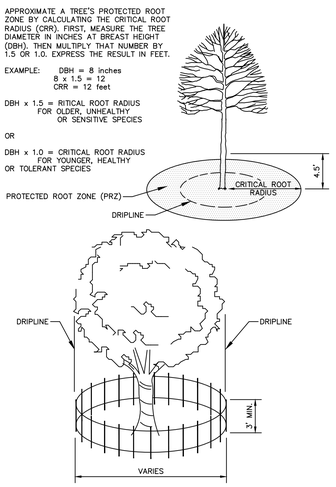


NOTE:
1. CONTRACTOR SHALL INSTALL TREE PROTECTION FENCING IN THE AREA SURROUNDING THE TREE WITHIN THE CRITICAL ROOT RADIUS
2. NO EXCAVATION IS PERMITTED WITHIN THE CRITICAL ROOT RADIUS
3. IF EXCAVATION WITHIN THE CRITICAL ROOT RADIUS OF ANY TREE IS NECESSARY, CONTRACTOR SHALL CONTACT CITY FORESTER PRIOR TO EXCAVATION TO ASSESS THE IMPACT TO THE TREE AND ROOT SYSTEM.

1 L2.0 TREE PROTECTION FENCING
NTS

NOTE:
1. DIG HOLE NO DEEPER THAN BASE OF ROOT BALL TO FLARE. ROOT BALL TO BE SET ON UNDISTURBED SOIL UNLESS COMPACTED AGGREGATE STONE REMAINS FROM SITE EXCAVATOR. REMOVE REMAINING AGGREGATE STONE UNTIL SOIL LAYER IS REACHED.
2. TREE PIT DIAMETER SHALL BE AT LEAST TWO–TIMES ROOT BALL DIAMETER IN ALL DIRECTIONS. SLOPE SIDES OF TREE PIT FROM PROPOSED GRADE TO BOTTOM OF ROOT BALL IN ALL DIRECTIONS.

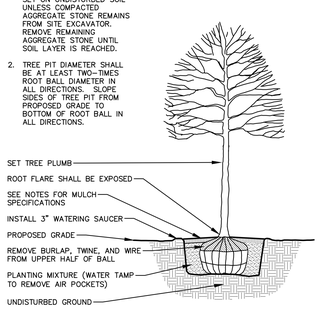


2 L2.0 DECIDUOUS TREE
NTS

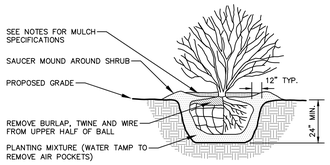


NOTE:
1. ROOT FLARE TO BE EXPOSED.

3 L2.0 DECIDUOUS/EVERGREEN SHRUB
NTS

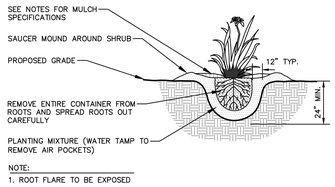


NOTE:
1. ROOT FLARE TO BE EXPOSED

4 L2.0 PERENNIAL/ORNAMENTAL GRASS
NTS

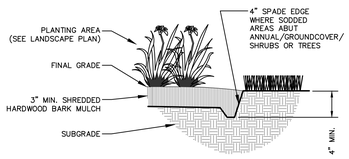


5 L2.0 NATURAL SPADE EDGE
NTS

KORB + ASSOCIATES ARCHITECTS

JSD

PROJECT:
BAY CITY LOFTS
216 S. MILITARY AVE.
GREEN BAY, WI

OWNER:
GORMAN & COMPANY
200 N Main Street
Oregon, WI 53575

ARCHITECT:
KORB + ASSOCIATES ARCHITECTS
648 N. PLANKINTON AVE
SUITE 240
MILWAUKEE, WI 53203

CIVIL ENGINEER:
JSD PROFESSIONAL SERVICES, INC.
7402 STONE RIDGE DRIVE
WESTON, WI 54476

STRUCTURAL ENGINEER:
SPIRE ENGINEERING, INC.
305 N Plankinton Avenue
Suite 101
Milwaukee, WI 53203

| DATE | REVISION |
|---|---|

DESIGN REVIEW - NOT FOR CONSTRUCTION -

| | |
|---|---|
| PROJ. NO. | 22002-04 |
| SCALE | AS INDICATED |
| PHASE | 95% CONSTR. DOC. |
| DATE | 10.14.2022 |

LANDSCAPE NOTES & DETAILS

L2.0

Copyright (C) Korb & Associates Architects Inc.

File: N:\PROJECTS\2022\221365\DWG\Landscape Sheets\221365 Landscape Plans.dwg Layout: L2.0 User: amayou Plotted: Nov 21, 2022 - 2:14pm Xrefs:

Exhibit A

NOT FOR CONSTRUCTION

KORB + ASSOCIATES ARCHITECTS

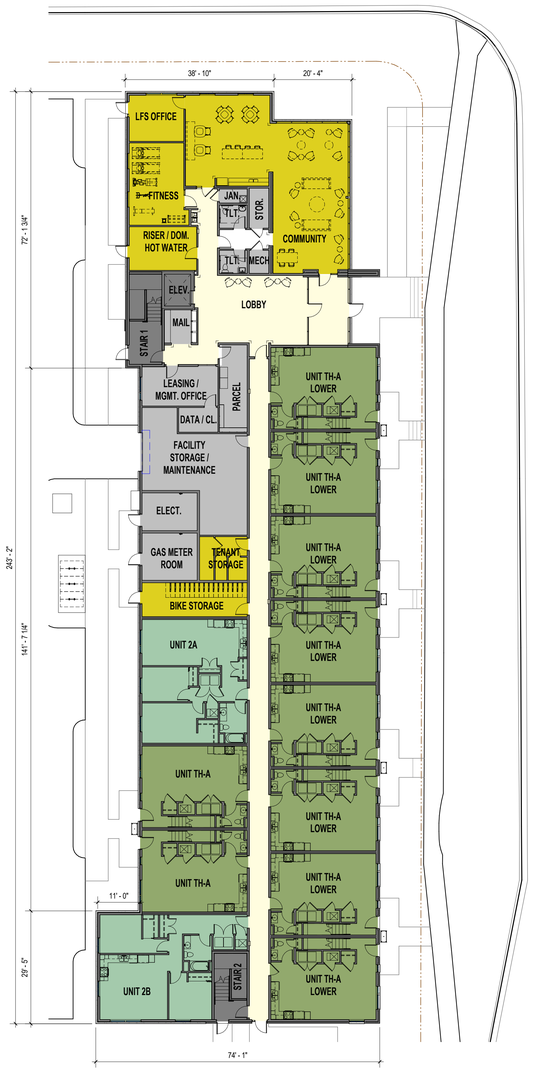


FIRST FLOOR PLAN

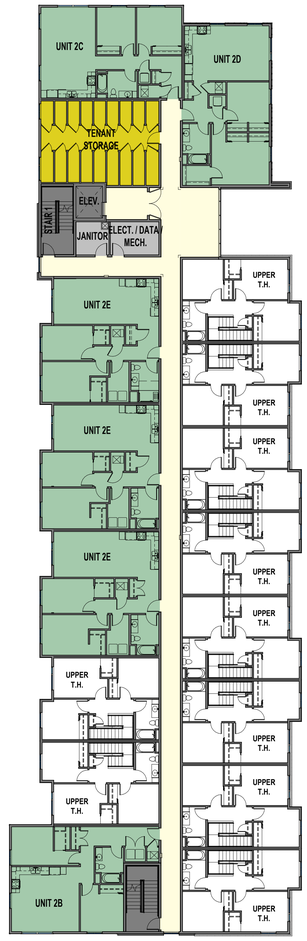


SECOND FLOOR PLAN

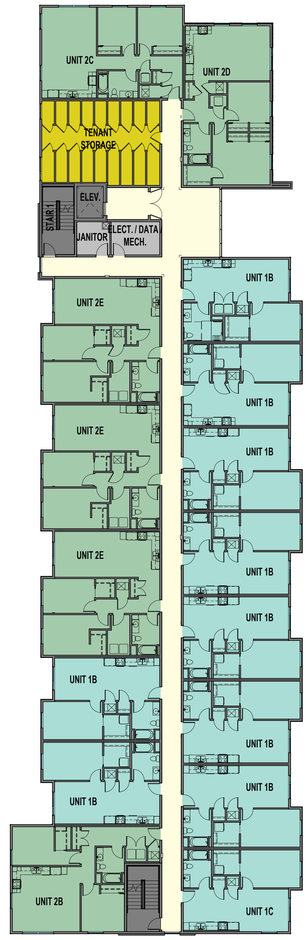


THIRD FLOOR PLAN

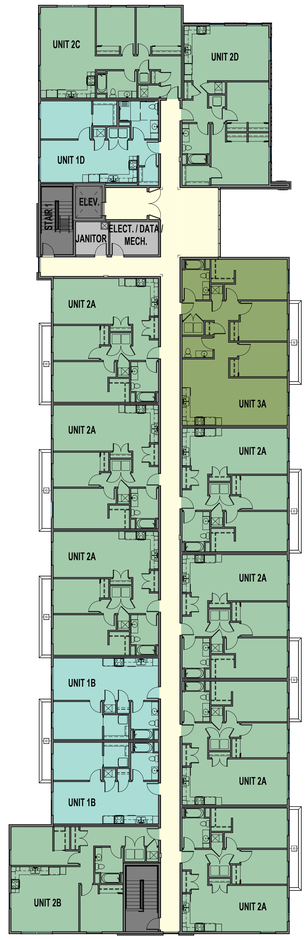


FOURTH FLOOR PLAN

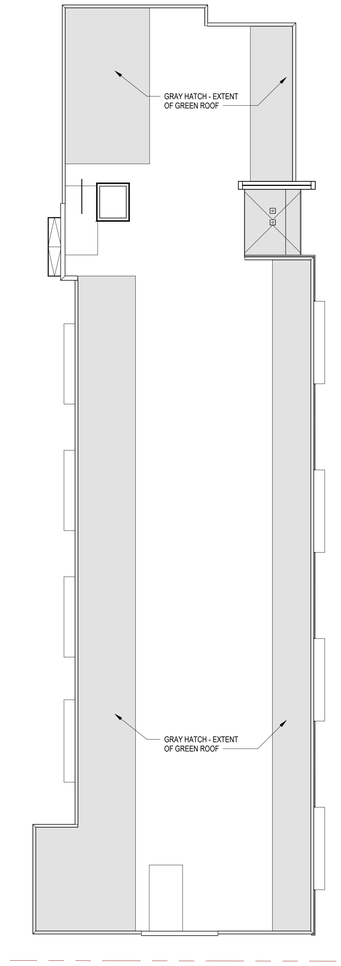


ROOF PLAN

| UNIT SUMMARY | | |
|---|---|---|
| UNIT | Beds/Baths | Unit Type |
| UNIT 308 | 1BR 1BA | 1C |
| UNIT 307 | 1BR 1BA | 1B |
| UNIT 306 | 1BR 1BA | 1B |
| UNIT 305 | 1BR 1BA | 1B |
| UNIT 304 | 1BR 1BA | 1B |
| UNIT 303 | 1BR 1BA | 1B |
| UNIT 302 | 1BR 1BA | 1B |
| UNIT 301 | 1BR 1BA | 1B |
| UNIT 311 | 1BR 1BA | 1B |
| UNIT 310 | 1BR 1BA | 1B |
| UNIT 412 | 1BR 1BA | 1D |
| UNIT 407 | 1BR 1BA | 1B |
| UNIT 408 | 1BR 1BA | 1B |
| 1BR 1BA: 13 | | |
| UNIT 209 | 2BR 1BA | 2B |
| UNIT 212 | 2BR 1BA | 2E |
| UNIT 213 | 2BR 1BA | 2E |
| UNIT 214 | 2BR 1BA | 2E |
| UNIT 215 | 2BR 1BA | 2C |
| UNIT 216 | 2BR 1BA | 2D |
| UNIT 109 | 2BR 1BA | 2B |
| UNIT 112 | 2BR 1BA | 2A |
| UNIT 316 | 2BR 1BA | 2D |
| UNIT 315 | 2BR 1BA | 2C |
| UNIT 314 | 2BR 1BA | 2E |
| UNIT 313 | 2BR 1BA | 2E |
| UNIT 312 | 2BR 1BA | 2E |
| UNIT 309 | 2BR 1BA | 2B |
| UNIT 413 | 2BR 1BA | 2C |
| UNIT 414 | 2BR 1BA | 2D |
| UNIT 402 | 2BR 1BA | 2A |
| UNIT 403 | 2BR 1BA | 2A |
| UNIT 404 | 2BR 1BA | 2A |
| UNIT 405 | 2BR 1BA | 2A |
| UNIT 406 | 2BR 1BA | 2B |
| UNIT 409 | 2BR 1BA | 2A |
| UNIT 410 | 2BR 1BA | 2A |
| UNIT 411 | 2BR 1BA | 2A |
| 2BR 1BA: 24 | | |
| UNIT 101.1 (LOWER) | 3BR 1.5BA | TH-A |
| UNIT 102.1 (LOWER) | 3BR 1.5BA | TH-A |
| UNIT 103.1 (LOWER) | 3BR 1.5BA | TH-A |
| UNIT 104.1 (LOWER) | 3BR 1.5BA | TH-A |
| UNIT 105.1 (LOWER) | 3BR 1.5BA | TH-A |
| UNIT 106.1 (LOWER) | 3BR 1.5BA | TH-A |
| UNIT 107.1 (LOWER) | 3BR 1.5BA | TH-A |
| UNIT 108.1 (LOWER) | 3BR 1.5BA | TH-A |
| UNIT 110.1 (LOWER) | 3BR 1.5BA | TH-A |
| UNIT 111.1 (LOWER) | 3BR 1.5BA | TH-A |
| UNIT 401 | 3BR 1.5BA | 3A |
| 3BR 1.5BA: 11 | | |
| TOTAL OF ALL UNITS: 48 | | |

FLOOR PLANS

11.16.2022

# BAY CITY LOFTS

22002-04

Copyright (C) Korb & Associates Architects Inc.

NOT FOR CONSTRUCTION

| KEYNOTE | DESCRIPTION |
|---|---|
| 04 CSTN-1 | 04 72 00 / CAST STONE SILL - TO MATCH CORDOVA BUFF |
| 04 FBR-1 | 04 26 13 / FACE BRICK - UTILITY SIZE |
| 04 STN-1 | 04 43 13.13 / ANCHORED STONE MASONRY VENEER |
| 07 FCB-1 | 07 46 46 / FIBER CEMENT RAINSCREEN |
| 07 MP-1 | 07 46 19 / METAL PANEL |
| 07 SDG-1 | 07 46 46 / FIBER CEMENT LAP SIDING |
| 07 SMF-2 | 07 62 00 / SHEET METAL FLASHING - PREFINISHED ALUMINUM |
| 08 AFS-2 | 08 41 13 / ALUMINUM FRAMING SYSTEM - EXTERIOR, THERMALLY BROKEN |
| 08 VWS-1 | 08 53 13 / VINYL WINDOW SYSTEM |

KORB + ASSOCIATES ARCHITECTS

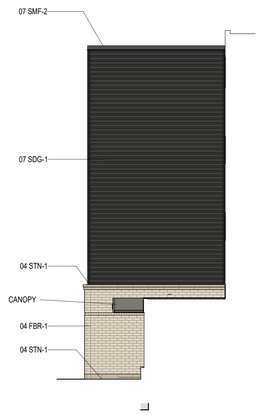


ENTRY ELEVATION N. - COLOR

NORTH ELEVATION - COLOR

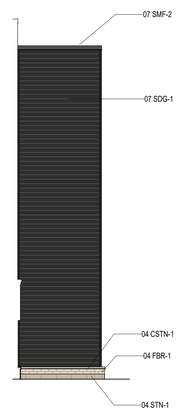


N. ELEVATION BUMP - COLOR

SOUTH ELEVATION - COLOR

**2** WEST ELEVATION - COLOR
201 1/8" = 1'-0"

EAST ELEVATION - COLOR

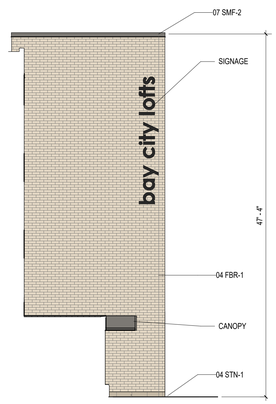


ENTRY ELEVATION S. - COLOR

COLOR ELEVATIONS

# BAY CITY LOFTS

22002-04

11.16.2022

Copyright (C) Korb & Associates Architects Inc.

NOT FOR CONSTRUCTION

KORB + ASSOCIATES ARCHITECTS

PERSPECTIVE - S. MILITARY AVE NE CORNER

PERSPECTIVE - SOUTH WEST CORNER

PERSPECTIVE - S. MILITARY AVE SOUTH EAST CORNER

PERSPECTIVE - S. MILITARY AVE ENTRY

PERSPECTIVE - NORTH WEST CORNER

RENDERINGS

11.16.2022

# BAY CITY LOFTS

22002-04

Copyright (C) Korb & Associates Architects Inc.

**ZONING ORDINANCE NO. 07-23**

**AN ORDINANCE**
**CREATING A PLANNED UNIT DEVELOPMENT (PUD)**
**OVERLAY DISTRICT FOR PROPERTY ON THE**
**1577 LANGLADE AVENUE**
**(ZP 23-05)**

THE COMMON COUNCIL OF THE CITY OF GREEN BAY DOES ORDAIN AS FOLLOWS:

**SECTION 1.** Section 44-30, Green Bay Municipal Code, together with the zoning map referred to therein, is hereby amended by establishing a Planned Unit Development Overlay District on the following described properties, as also depicted on Exhibit A - Location Map:

Parcel Identification and Legal Description:

| Parcel No. | Address | Legal Description |
|---|---|---|
| 6-299-A | 1577 Langlade Ave, Green Bay, WI 54304 | PRT OF E 40 AC OF W 70 AC OF PC 10 WSFR DESC IN 303 D 10 & 232 D 349 EX 73 MR 568 & EX 19 LC 179 & EX 19 LC 463 & EX 1 CSM 369 & EX PCL E OF 2 CSM 633 & EX 17 CSM 121 & EX ST & PRT OF VAC ARGONNE CT DESC IN 2424595<br>4.398 AC M/L |
| 6-299-A-8 | 0 Argonne Drive, Green Bay, WI 54304 | LOT 2 OF 17 CSM 121 BNG PRT OF PC 10 WSFR & PRT OF VAC ARNOLD DR ADJ & PRT OF VAC ARGONNE CT DESC IN 2424595<br>1.433 AC M/L |

Land Area comprises approximately 253,998 square feet / 5.831 acres

**SECTION 2.** Pursuant to Chapter 44, Article XX, Green Bay Municipal Code, as it applies, the following conditions are imposed:

A. Purpose and Intent. The Planned Unit Development (PUD) is being utilized to permit the development of a franchised new and used automobile dealership with up to a 30,000 square feet of dealership facility, automobile display areas, and secured automobile storage area. The overall appearance and design of the site, site improvements and the building shall be in substantial conformance with the attached Exhibits and as regulated within this PUD.

B. Development Site. Area included within this PUD currently consists of two (2) individual parcels; one (1) located at the southwest corner of Langlade Ave and

Military Ave and one (1) that fronts Argonne Drive. The two (2) individual parcels shall be combined to a single tax parcel prior to issuance of administrative site plan approval, building permit and occupancy permit.

C. Land Use Regulations. The principal and accessory land uses which may be established and/or maintained on the subject property are as follows:
   1. Principal uses (within a single structure): Franchised new and used automobile dealership. A franchised dealership is defined in this PUD as an auto seller that sells new and used cars for auto manufacturers such as Hyundai, Ford, General Motors, Honda, and other major brands.
   2. Accessory uses customarily associated with a franchised automobile dealership including new and used automobile display area, storage area for automobiles to be serviced, offices, showrooms, parts departments, automobile service/repair department, automobile wash and other uses deemed appropriate by the Zoning Administrator.
   3. Said uses listed in Section 2.C.1. & 2. are limited to siting/placement by designated Development Area, as depicted on Exhibit B - Development Areas.
      a. Development Area A – the main area of the site for public interaction including display, sales and service. Development area A will include all proposed buildings, automobile display and customer parking. Access from the public right-of-way will be entirely from Development area A.
      b. Development Area B – Area dedicated to vehicle storage, employee parking, and access to parts department, automobile service/repair department, automobile wash including service bay/overhead doors. Development area B shall be secured with limited access to the public and no direct access from the public right-of-way. It shall be regulated within this PUD so that it is designed and operated to minimize potential impact and disruption to the low-density and senior housing uses surrounding it including buffer landscaping, fencing, low level time-controlled lighting, and security cameras.
   4. Prohibited Uses. As the property is located directly adjacent to low density residential and senior housing, this PUD limits certain uses from being established on the site that may be considered typical accessory uses to the franchised automobile dealership including collision center and outdoor storage of parts and equipment. All proposed uses are not listed in Section 2.C are subject to a PUD amendment.
   5. Hours of Operation. Sales hours shall be limited to no earlier than 9 a.m. and no later than 8 p.m. Delivery, repair and service hours shall be limited to no earlier than 7 a.m. and no later than 8 p.m. with the exception of parts delivery, which shall be allowed 24 hours but limited to Development Area A. Development Area B shall not be accessible after the hours of operation.

D. Dimensional and Area Requirements. The overall appearance and design of the site and site improvements shall be in substantial conformance with attached Exhibit B and as regulated within this PUD and the Green Bay

Municipal Code, Chapter 44. Dimensional and area requirements for principal structure and surface parking on the subject property shall be regulated as follows:

1. General Site
   a. Maximum Building Height: Principal building shall not exceed 35 feet in height.
   b. Maximum Impervious Surface: 80%
2. Setbacks
   a. Front Yard Setbacks (Argonne & Langlade): 25 feet
   b. Front yard Setbacks (Military): 15 feet
   c. Side Yard Setback (internal west & east lot lines): 25 feet
   d. Rear Yard Setbacks (south lot line): 25 feet

E. Access Circulation and Parking. Access, circulation, and parking within the PUD area shall meet the standards as set forth within the Green Bay Zoning Code, Article XVIII of the Green Bay Municipal Code, and as modified as follows:

1. The site is limited to two (2) driveways. One (1) full access vehicular access driveway (may be designed for Semi-Trailers) may be located on Langlade Avenue no closer than 155 feet from the Military Avenue – Langlade Avenue intersection and one (1) limited right-in/right-out vehicular access driveway (designed for automobile and single axle trucks) may be located on Military Avenue no closer than 305 feet from the Military Avenue – Langlade Avenue intersection.
   a. No access for vehicles or pedestrians shall be permitted to be located to access Argonne Drive.
2. Parking shall be provided as regulated in Green Bay Municipal Code, Chapter 44, Article XVIII-Off-Street Parking, Drives and Loading for motor vehicle rental/sales.
3. Pedestrian access shall be provided from the public sidewalk adjoining the development on Military Avenue and connected via an internal pedestrian network to the entrance of the principal structure.

F. Lighting.

1. All lighting within Development Area A shall meet the standards as set forth within the Green Bay Zoning Code, Article V of the Green Bay Municipal Code.
2. Lighting within Development Area B shall be limited to full cutoff lighting ground and building mounted lighting no greater than 15 feet high as measured from grade to the bottom of the light fixture. Low level bollard lighting is encouraged in Development Area B and may be a non-cutoff fixture but limited to a maximum of five (5) feet in height from grade.
   a. Lighting shall be timed so that light levels are no greater than 0.25 foot-candles at any property line adjoining residential use between the hours of 10 p.m. and 7 a.m.

G. Signage. All signage within the PUD area shall meet the standards of the C2 Highway Commercial Zoning District, as set forth within Chapter 30 of the

Green Bay Municipal Code.

1. No signage other than non-illuminated directional signage shall be directed to the west or south of the subject property.

H. Refuse and Mechanical Equipment. Screening of refuse material containers and mechanical equipment throughout the PUD area shall meet the standards as set forth within the Green Bay Zoning Code, Article XIX of the Green Bay Municipal Code.

I. Landscaping and Transitional Yards. Landscaping within the PUD area shall meet the standards as set forth within the Green Bay Zoning Code, Article XIX of the Green Bay Municipal Code with the following addition:

1. Increased level of buffering shall include the installation of a 6 to 8 foot-tall fully opaque fence as well as double the required plant materials described in Section 44-1964.
2. Buffer landscaping shall be installed and maintained along the entire west property line, south property line and the entirety of Development Area B where adjacent to property zoned residentially zoned or used for residential purposes.

J. Stormwater Management and Grading. A storm water management and grading plan meeting the standards established by the Department of Public Works shall be submitted to and approved by the City prior to the issuance of building permits.

1. Stormwater management areas such as bioretention areas, rain gardens, stormwater trees, or other plantings are encouraged.

K. Compliance with all the regulations of the Green Bay Municipal Code not otherwise addressed within the PUD.

**SECTION 3.** The provisions of this ordinance, including, without limitation, the granting of a conditional-use permit and all obligations, conditions, restrictions, and limitations related thereto shall run with and be jointly and severally binding upon the fee simple owner and the beneficial owner of all or any portion of the subject property. All obligations, requirements, and rights of the owner shall run with the land and shall automatically be assigned to be binding upon and inure to the benefit of its successors and assigns, including, but not limited to, any entity acquiring any financial interest in the subject property and/or any subsequent owner and/or beneficial owner of all or any portion of the subject property.

**SECTION 4.** Each exhibit which is attached to this ordinance is deemed to be and is expressly made a part of and incorporated into this ordinance to the same extent as if each such exhibit, and the plans identified therein, had been set forth in its entirety in the body of this ordinance.

**SECTION 5.** All ordinances or parts of ordinances in conflict herewith are hereby repealed.

**SECTION 6.** In addition to all other remedies available to the City of Green Bay, the City may decline to issue any building or other permits otherwise required by any ordinance of this City while any violation of this ordinance remains uncured.

**SECTION 7.** If any provision in this ordinance is held invalid or unconstitutional by any court of competent jurisdiction, such a decision shall not affect the validity of any other provision of this ordinance. It is hereby declared to be the intention of the City of Green Bay that all provisions of this ordinance are separable.

**SECTION 8.** This ordinance shall not take effect until a public hearing is held thereon as provided by Chapter 44, Article II, Division 2, Section 44-82 Zoning Amendments, Green Bay Municipal Code, and the adoption and publication of this ordinance.

Dated at Green Bay, Wisconsin, this _____ day of _____, 2023.

APPROVED:

_____
Eric Genrich, Mayor

ATTEST:

_____
Celestine Jeffreys, City Clerk

db:

**Attachments:**
Exhibit A – Location Map
Exhibit B - Development Areas & Conceptual Site Plan
Exhibit D – Conceptual Building Elevations

Proposed PUD

400' Property Owner Notice

This is a compilation of records and data located in various City of Green Bay offices and is to be used for reference purposes only. The City of Green Bay is not responsible for any inaccuracies or unauthorized use of the information contained within. No warranties are implied.
Map prepared by DB

**Zoning Petition (ZP 23-05)**
**Proposed Planned Unit Development (PUD) at 1577 Langlade Avenue**

CITY OF GREEN BAY 1854 Titletown, USA

# EXHIBIT B-Development Areas & Concept Plan

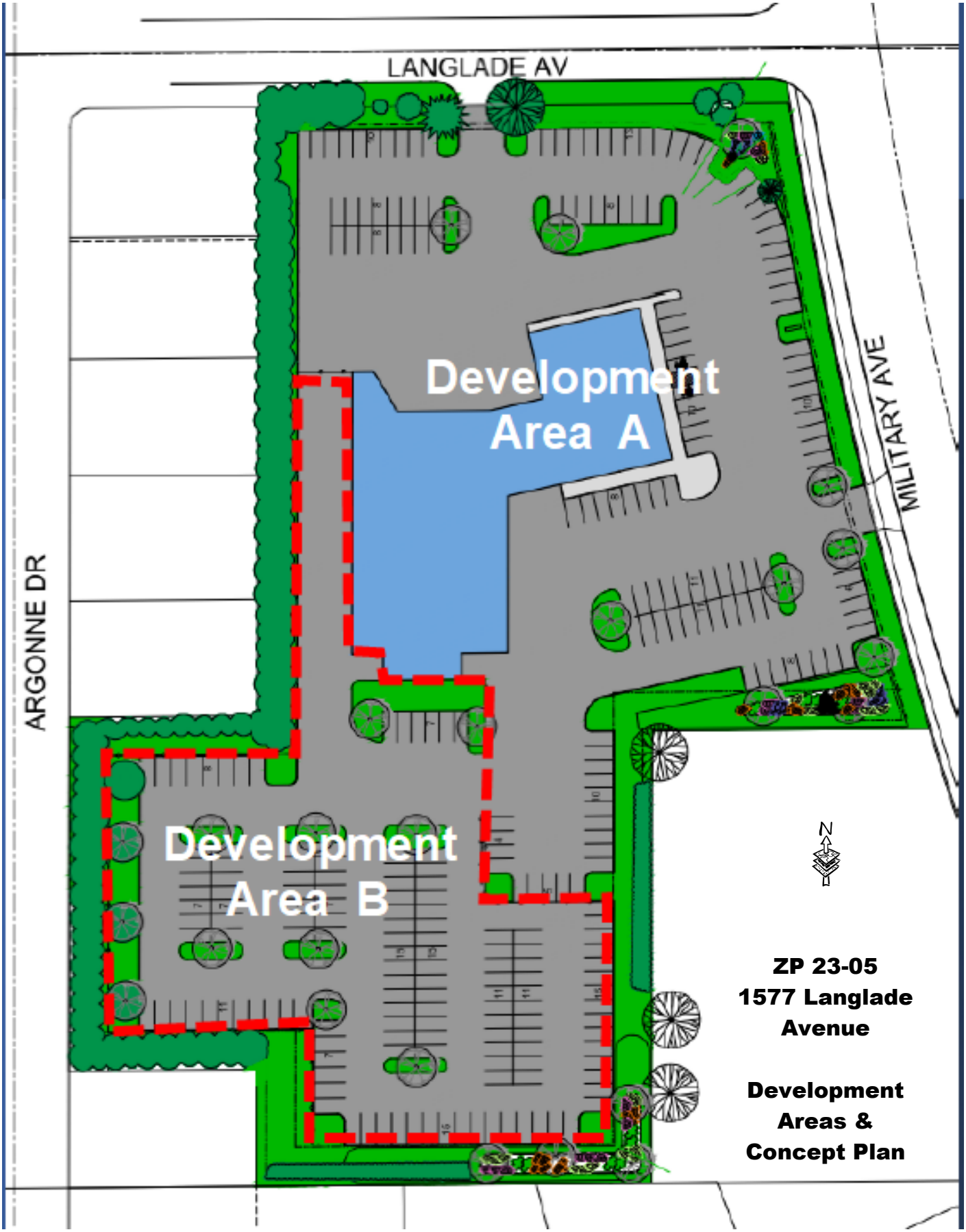

# EXHIBIT C-Conceptual Building Elevations

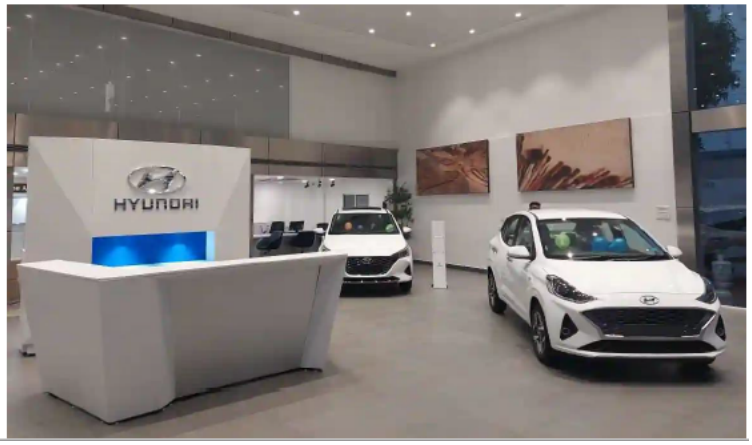

Proposed PUD

400' Property Owner Notice

This is a compilation of records and data located in various City of Green Bay offices and is to be used for reference purposes only. The City of Green Bay is not responsible for any inaccuracies or unauthorized use of the information contained within. No warranties are implied.
Map prepared by DB

**Zoning Petition (ZP 23-05)**
**Proposed Planned Unit Development (PUD) at 1577 Langlade Avenue**

CITY OF GREEN BAY 1854 Titletown, USA

For Official Notice:

**Public Notification**
**Rezoning property located at**
**1577 Langlade Ave (6-299-A & 6H-299-A-8)**
**(ZP 23-05)**

The Green Bay Plan Commission will hold a public hearing on Monday, March 13, 2023, at 6:00 p.m. The meeting will be conducted both in person in Room 604 of City Hall (100 N Jefferson Street, Green Bay, 54301) and virtually. If you wish to participate in the Public Hearing virtually, you may access the meeting by internet or telephone, using the access code below.

Join Zoom Meeting
https://us02web.zoom.us/j/84137675822?pwd=L2EyVlpDSlZGZ1FjcmlpWnZIOEVnUT09
Meeting ID: 841 3767 5822
Passcode: 483400
One tap mobile
+13126266799,,84137675822# US (Chicago)
+16468769923,,84137675822# US (New York)
Dial by your location
+1 312 626 6799 US (Chicago)
+1 646 876 9923 US (New York)
Find your local number: https://us02web.zoom.us/u/kc8xd2MWP

The hearing is regarding the following:
(ZP 23-05) Public hearing on the request to rezone property located at 1577 Langlade Ave (6-299-A & 6H-299-A-8) from the R-1 Low Density Residential District & C1 General Commercial District to C2 Highway Commercial District.

Public comments will be invited at the public hearing or can be sent in writing to:
City of Green Bay
Community & Economic Development
Attn: David Buck, AICP
100 N. Jefferson St., Rm. 608
Green Bay, WI 54301

For additional information, contact David Buck at david.buck@greenbaywi.gov or 920.448.3411.

ACCESSIBILITY: Any person wishing to attend who, because of a disability, requires special accommodation should contact the City Safety Manager at 920.448.3125 at least 48 hours before the scheduled meeting time so that arrangements can be made.

Publication Dates: February 24, 2023 and March 3, 2023

# MISCELLANEOUS ORDINANCE NO. 04-23

## AN ORDINANCE ADOPTING AN AMENDMENT TO THE SMART GROWTH 2022 COMPREHENSIVE PLAN OF THE CITY OF GREEN BAY PERTAINING TO PROPERTIES LOCATED NEAR THE INTERSECTIONS OF VANDERBRAAK, N CLAY, AND WEISE STREETS (PARCEL #20-350, #20-349, #20-381, #20-382, #20-383) (CPA 23-02)

WHEREAS, pursuant to Wis. Stats. §§ 62.23(2) and (3), the City of Green Bay is authorized to prepare, adopt, and amend a comprehensive plan, as defined in Wis. Stats. § 66.1001(4)(a); and

WHEREAS the Common Council has adopted the Smart Growth 2022 Comprehensive Plan for the purpose of guiding future land-use decision making, but recognizes that from time-to-time amendments may be necessary to reflect changes in the land use and planning needs of the community; and

WHEREAS the Common Council of the City of Green Bay has adopted written procedures (known as the Public Participation Plan for Periodic Comprehensive Plan Amendments) designed to foster public participation in every stage of the preparation of periodic comprehensive plan amendments required by Wis. Stats. § 66.1001(4)(a); and

WHEREAS the City of Green Bay has held at least one public hearing on this ordinance in compliance with the requirements of Wis. Stats. § 66.1001(4)(d), and it is the Common Council's belief that this comprehensive plan amendment is necessary and consistent with the overall goals, policies, and other related elements of the plan;

NOW, THEREFORE, THE COMMON COUNCIL OF THE CITY OF GREEN BAY DOES ORDAIN AS FOLLOWS:

**SECTION 1.** Comprehensive Plan Amendment CPA 22-01 is hereby adopted pursuant to Wis. Stats. § 66.1001(4)(c). A copy of the comprehensive plan amendment is attached to this ordinance.

**SECTION 2.** This ordinance shall take effect upon its passage and publication.

Dated at Green Bay, Wisconsin, this _____ day of _____, 2023.

APPROVED:

_____
Mayor

ATTEST:

_____
Clerk

Enclosure – Map

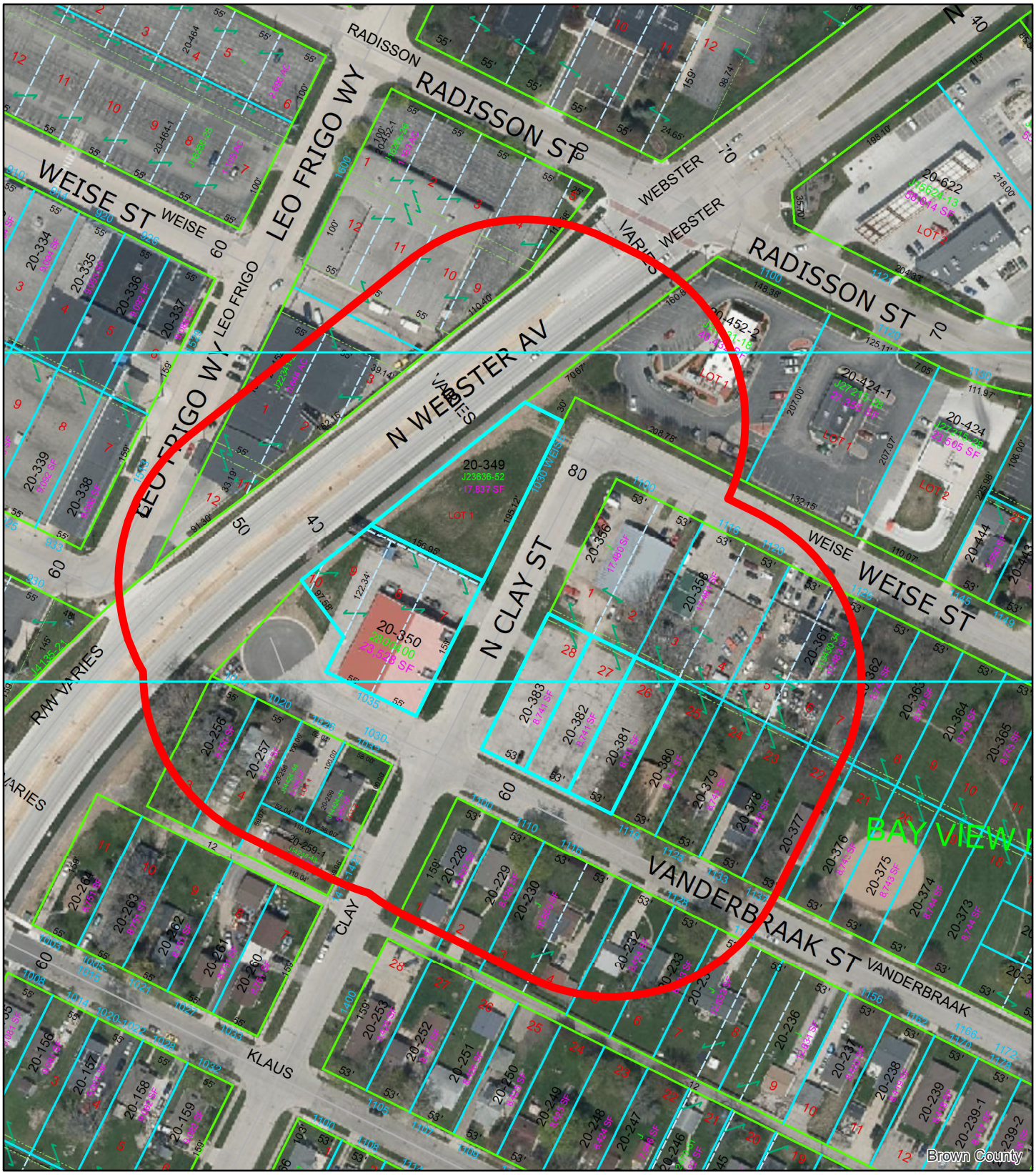


# (CPA 23-02) Comprehensive Plan Amendment
## Vanderbraak & Weise Street

Feet
0 40 80 160

N

*This is a compilation of records and data located in various City of Green Bay offices and is to be used for reference purposes only. The City of Green Bay is not responsible for any inaccuracies or unauthorized use of the information contained within. No warranties are implied. Map prepared by City of Green Bay Department of Community and Economic Development. E.R. 28 Feb 2023 X:\Planning\Basemaps\template_8.5x11.mxd*

Subject Properties

200-ft. Notification Area