AGENDA OF THE LANDMARKS COMMISSION

WEDNESDAY, JULY 17, 2024, 4:30 PM
City Hall, Room 604 - The Harry Maier Room.
Virtual attendance is also available via Zoom.

A. Zoom Meeting Information.

1. Join Zoom Meeting Online:
   https://us02web.zoom.us/j/89692538356?pwd=azA0c1hWd3kxaklncGJzRXJQUW5qZz09

   Or call in by phone: +1 312 626 6799
   Meeting ID: 896 9253 8356
   Passcode: 973532

   If you wish to speak at this public meeting or leave a comment, please fill out the online Comment Form prior to the meeting. More detailed Zoom Instructions can be found online.

B. Roll Call.

1. Members: Chair Ron Dehn, Vice-Chair Paul Martzke, Ald. Jim Hutchison, Stephen Srubas, Susan Ley, David Siegel, and Rebecca Derenne.

C. Approval of the Agenda.

1. Approval of the agenda for the Wednesday, July 17, 2024, meeting of the Landmarks Commission.

D. Approval of Minutes.

1. Approval of the minutes from the June 19, 2024, meeting.

E. Regular Business.

1. Election of Officers.

2. (COA 24-29) Consideration with possible action on a design review for a rear canopy addition located at 117 N Adams Street.

3. (COA 24-30) Consideration with possible action on a design review for rear stair replacement located at 735 S Jackson Street.

4. (COA 24-36) Consideration with possible action on a design review for window replacement located at 806 S Quincy Street.

F. Informational.

1. Staff-level COA applications.

2. Staff update.

3. Date of next meeting: August 21, 2024.

G. Adjournment.

1) THIS MEETING IS RECORDED: THE VIDEO OF THIS MEETING AND MINUTES ARE AVAILABLE ONLINE AT www.greenbaywi.gov
2) ACCESSIBILITY: Any person wishing to attend who requires special accommodation because of a disability, should contact the City Safety Manager at 920-448-3125 at least 48 hours before the scheduled meeting time so that arrangements can be made.
3) QUORUM: Please take notice that a majority or quorum of the Common Council will attend this Landmarks Commission meeting and will constitute a meeting of the Common Council for purposes of discussion and information gathering relative to this agenda.
4) REPRESENTATION: The party requesting the communication, or their representative, should be present at this meeting.

Report to the
Landmarks Commission of the City of Green Bay

MEETING DATE	PREPARED BY
July 17, 2024	Jason Flatt, Staff

AGENDA ITEM # E.2

(COA 24-29) Consideration with possible action on a design review for a rear canopy addition located at 117 N Adams Street.

BACKGROUND

117 N Adams is a contributing building in the Downtown Historic District, built circa 1900.

This COA proposes to install a retractable rain and shade canopy in an existing courtyard.

LC staff notes that the courtyard is entirely hidden from public view and the proposed canopy will not be visible from public vantage points.

RECOMMENDATION

LC staff recommends approval of the proposed courtyard canopy.

FISCAL IMPACT

ATTACHMENTS

1. COA 24-29 Map
2. COA 24-29 Canopy location and pictures
3. COA 24-29 Canopy Details
4. COA 24-29 Canopy Details 2
5. COA 24-29 Application

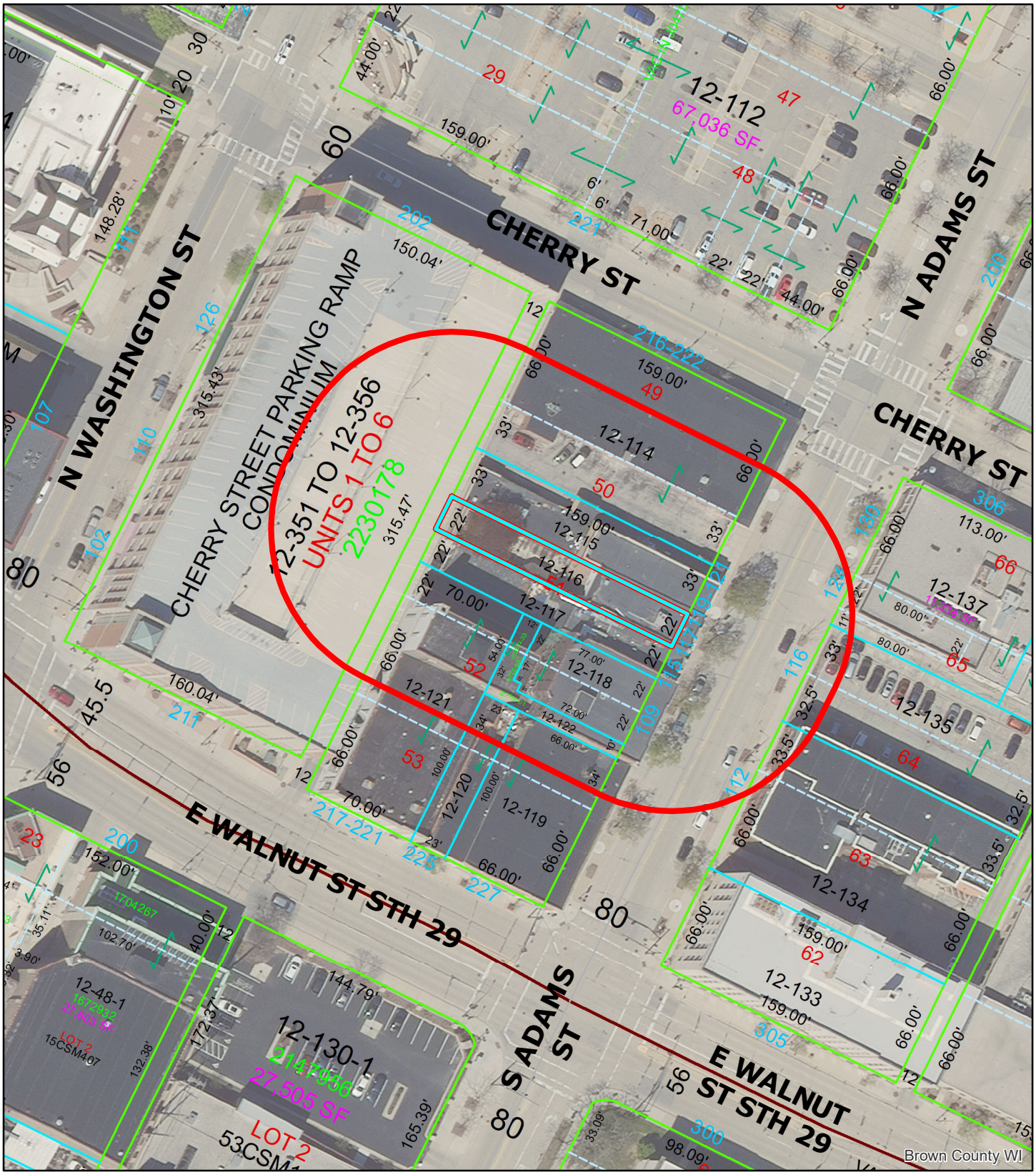

(COA 24-29) Rear Canopy Installation at 117 N Adams Street

Feet
0 20 40 80

N

117 N Adams

100-ft. Notification Area

This is a compilation of records and data located in various City of Green Bay offices and is to be used for reference purposes only. The City of Green Bay is not responsible for any inaccuracies or unauthorized use of the information contained within. No warranties are implied. Map prepared by City of Green Bay Department of Community and Economic Development. E.R. 09 Jul 2024 X:\Planning\Basemaps\template_8.5x11.mxd

Procore • Keller, Inc. | People You May Kn... | GoToMeeting Hub | https--global.goto... | Imported From IE | Sun & moon times t... | Manitowoc Municip... | ebrochure-retractab... | Reservation Request... | All Bookmark

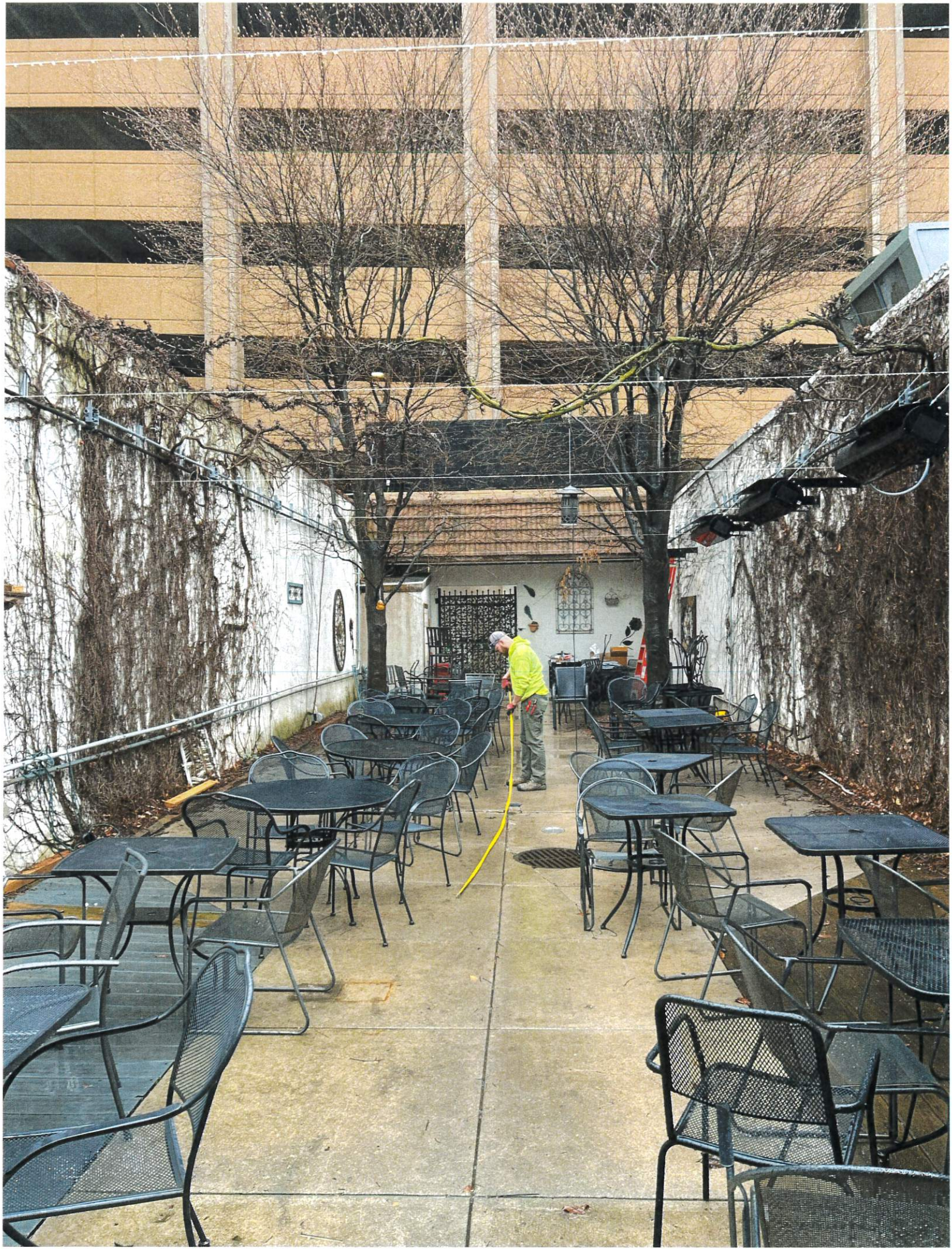

Italiano

SHEET INDEX

C1.0 CONCEPTUAL SITE PLAN
A1.0 FLOOR PLAN
A2.0 ELEVATIONS

BUILDING & FIRE AREA SQUARE FOOTAGES

FLOOR AREAS	EXISTING	NEW	SUB-TOTAL
SECOND FLOOR	------ S.F.	------ S.F.	------ S.F.
FIRST FLOOR	------ S.F.	------ S.F.	------ S.F.
CANOPIES (COLUMN SUPPORTED)	------ S.F.	------ S.F.	------ S.F.
BASEMENT	------ S.F.	------ S.F.	------ S.F.
BUILDING AREA SUB-TOTALS	------ S.F.	------ S.F.	------ S.F.
MEZZANINES	------ S.F.	------ S.F.	------ S.F.
FIRE AREA TOTALS	------ S.F.	------ S.F.	------ S.F.
REMODEL AREA TOTALS	------ S.F.	--% OF BUILDING AREA	

BUILDING CODE ANALYSIS

PROJECT ADDRESS
Street, City, State, Zip

APPLICABLE CODES
2015 International Building Code (w/ WI Amendments)
ASHRAE Standard 90.1-2013 or 2015 IECC
2015 IEBC (Level # Alteration)

OCCUPANCY
?-?
Accessory Use
?-?
Incidental Use

High-Piled Combustible Storage YES/NO
Hazardous Materials YES/NO
Multiple Control Areas YES/NO

HEIGHT & AREA
Building Height: -'--" Maximum Allowed: -'--"
Number of Stories: -- Maximum Allowed: --
Total Building Area: -,--- S.F. Maximum Allowed: -,--- S.F.
Total Fire Area: -,--- S.F. Maximum Allowed: -,--- S.F.
Mixed/Separated Occupancies
Unlimited Area Building YES/NO

CONSTRUCTION TYPE
Construction Classification ?B
Fire Separation Distance -'--"

FIRE PROTECTION SYSTEMS
Assumed Sprinkler Type --
Fire Alarm System YES/NO

MEANS OF EGRESS
Occupant Load --
Panic Hardware YES/NO

STRUCTURAL DESIGN
Risk Category --
Design Loads
Roof Live Load -- psf
Walk-on IMP Ceiling Live Load -- psf
Steel Framing
Collateral Load --psf
Wood Truss
Top Chord Dead Load --psf
Bottom Chord Load --psf
Mezzanine/Second Floor/Basementoor/Mezz
Live Load -- psf
Point Load (Partition) -- psf
Snow Load Criteria
Ground Snow Load (Pg) -- psf
Exposure Factor (Ce) --
Thermal Factor (Ct) --
Wind Loads
Wind Load -- MPH
Surface Roughness --
Exposure Category --
Earthquake Load Criteria
Soil Site Class --
Ss --
S1 --

PLUMBING SYSTEMS
Mens WC Required #
Womens WC Required #
Drinking Fountain Required #
Other Source YES/NO
Ambulatory Stall Required YES/NO

MECHANICAL SYSTEMS
NO SINGLE PIECE OF EQUIPMENT OVER 400,000 BTU
NO BOILERS OVER 15PSI AND 10 HORSEPOWER

SITE INFORMATION

SITE CONTENT
Building Size -,--- S.F. - --%
Hard Surface -,--- S.F. - --%
Green Space -,--- S.F. - --%
Parcel Size (Approx.) -,--- S.F. - -- Acres
Parking Provided -- Stalls
Area of Disturbance -,--- S.F.

ZONING
Property Zoning --
Setbacks FY -'--" SY -'--" RY -'--"
Hard Surface Setback -'--"
Coverage Limit --%
Greenspace Requirement --%
Parking Required -- Stalls
Refuse Enclosure YES/NO
RTU SCREENING YES/NO

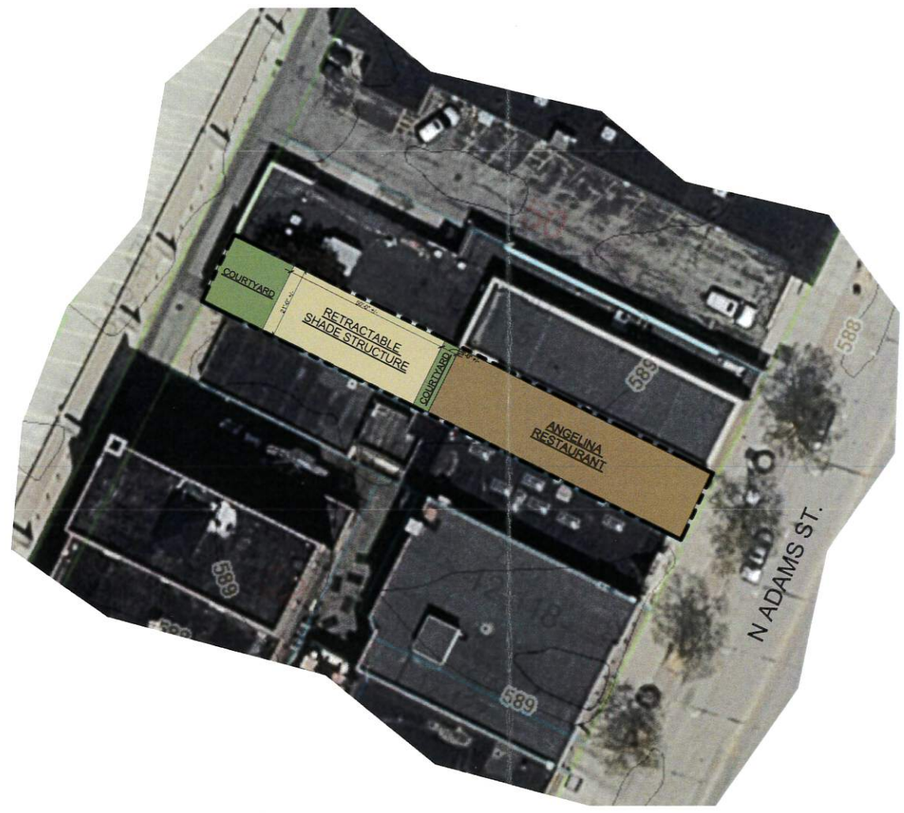

NORTH

CONCEPTUAL SITE PLAN
1" = 20'-0"

0' 10' 20' 40' 80'

THE LOT DIMENSIONS AND BEARINGS SHOWN ON THIS PLAN ARE INTERPRETED VALUES. BACKGROUND INFORMATION TAKEN FROM LOCAL GIS DATE. AERIAL IMAGERY AND/OR CLIENT PROVIDED INFORMATION. EASEMENTS, STREAMS AND ROADS ARE APPROXIMATE IN NATURE. FOLLOW UP INVESTIGATION WITH STATE AND LOCAL AUTHORITIES AND/OR WITH CERTIFIED SURVEY MAP DATA WHEN AVAILABLE IS REQUIRED

PROPOSED FOR:
ANGELINA RESTAURANT
GREEN BAY, WISCONSIN

Keller
PLANNERS | ARCHITECTS | BUILDERS

FOX CITIES
N216 State Road 55
P.O. Box 620
Kaukauna, WI 54130
PHONE (920) 766-5795 / 1-800-236-2534
FAX (920) 766-5004

MADISON
711 Lois Dr.
Sun Prairie, WI 53590
PHONE (608) 318-2336
FAX (608) 318-3337

MILWAUKEE
W204 N11509
Goldendale Rd
Germantown, WI 53022
PHONE (262) 250-9710 / 1-800-236-2534
FAX (262) 250-9740

WAUSAU
5605 Lilac Ave
Wausau, WI 54401
PHONE (715) 849-3141
FAX (715) 849-3181

www.kellerbuilds.com

PROPOSED FOR: ANGELINA RESTAURANT GREEN BAY, WISCONSIN

"COPYRIGHT NOTICE"
This design, drawing and detail is the copyrighted property of KELLER, INC. No part hereof shall be copied, duplicated, distributed, disclosed or made available to anyone without the expressed written consent of KELLER, INC.

REVISIONS

1		
2		
3		
4		
5		
6		

PRELIMINARY - NOT FOR CONSTRUCTION

PROJECT MANAGER: D. SCHWALBE
DESIGNER: S. KLESSIG
INTERIOR DESIGNER: -------
DRAWN BY: C. TEAFOE
EXPEDITOR: -------
SUPERVISOR: -------
PRELIMINARY NO: P24158
CONTRACT NO: -------
DATE: 05.30.2024
SHEET: C1.0

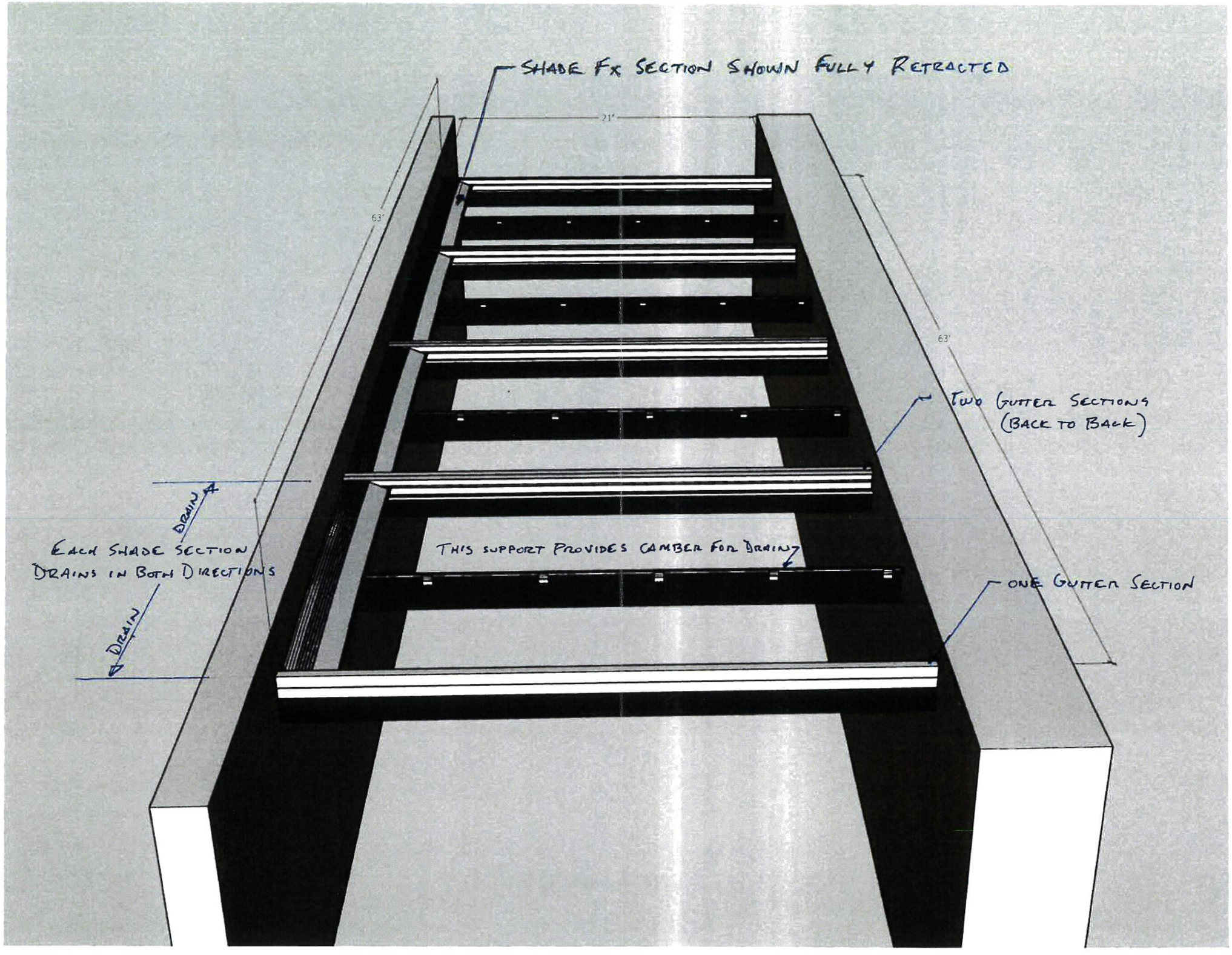
SHADE FX SECTION SHOWN FULLY RETRACTED
21'
63'
63'
TWO GUTTER SECTIONS (BACK TO BACK)
DRAIN
EACH SHADE SECTION DRAINS IN BOTH DIRECTIONS
DRAIN
THIS SUPPORT PROVIDES CAMBER FOR DRAIN
ONE GUTTER SECTION

ANGELINA
5/8/24

DETAILS

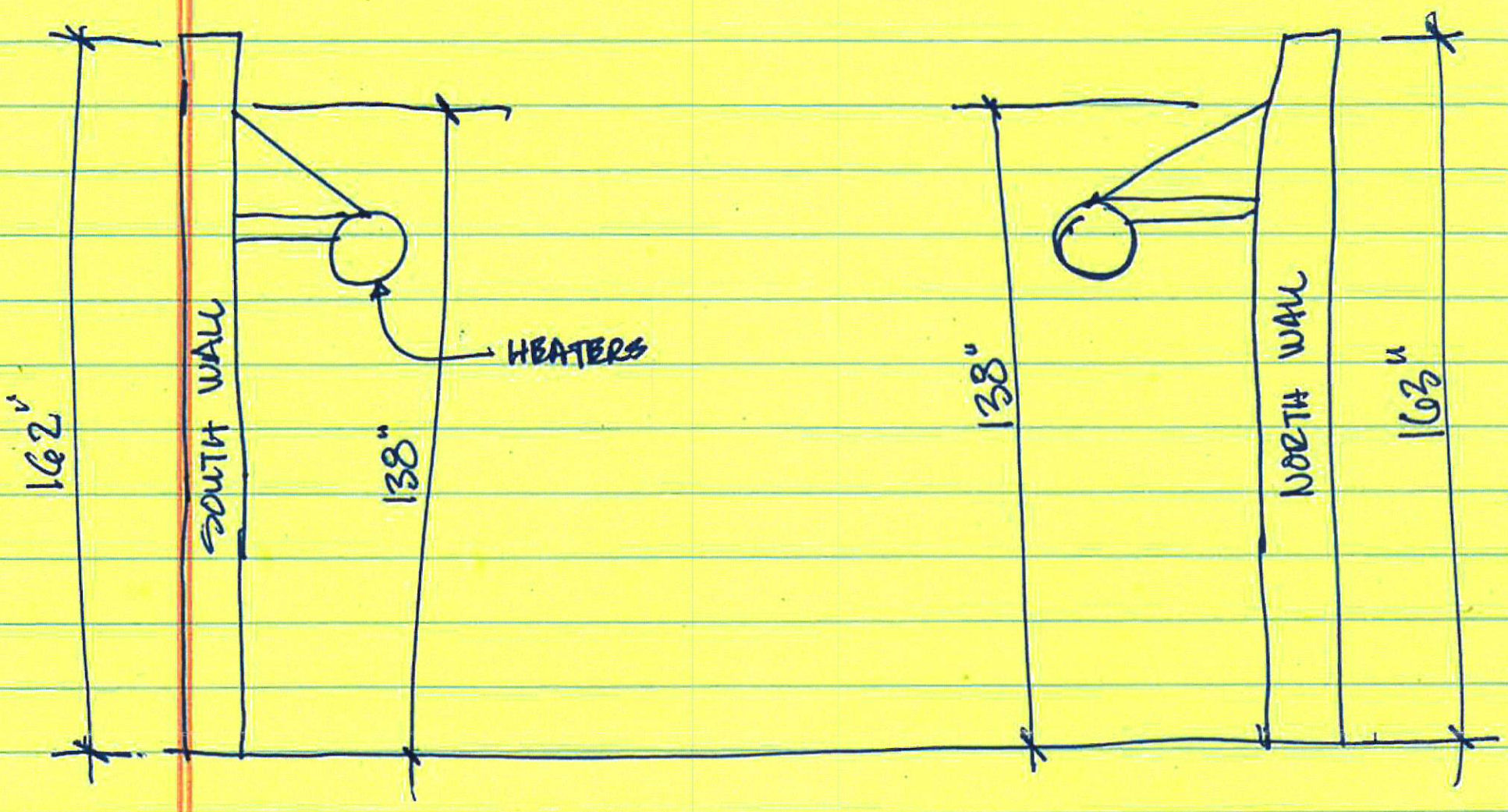

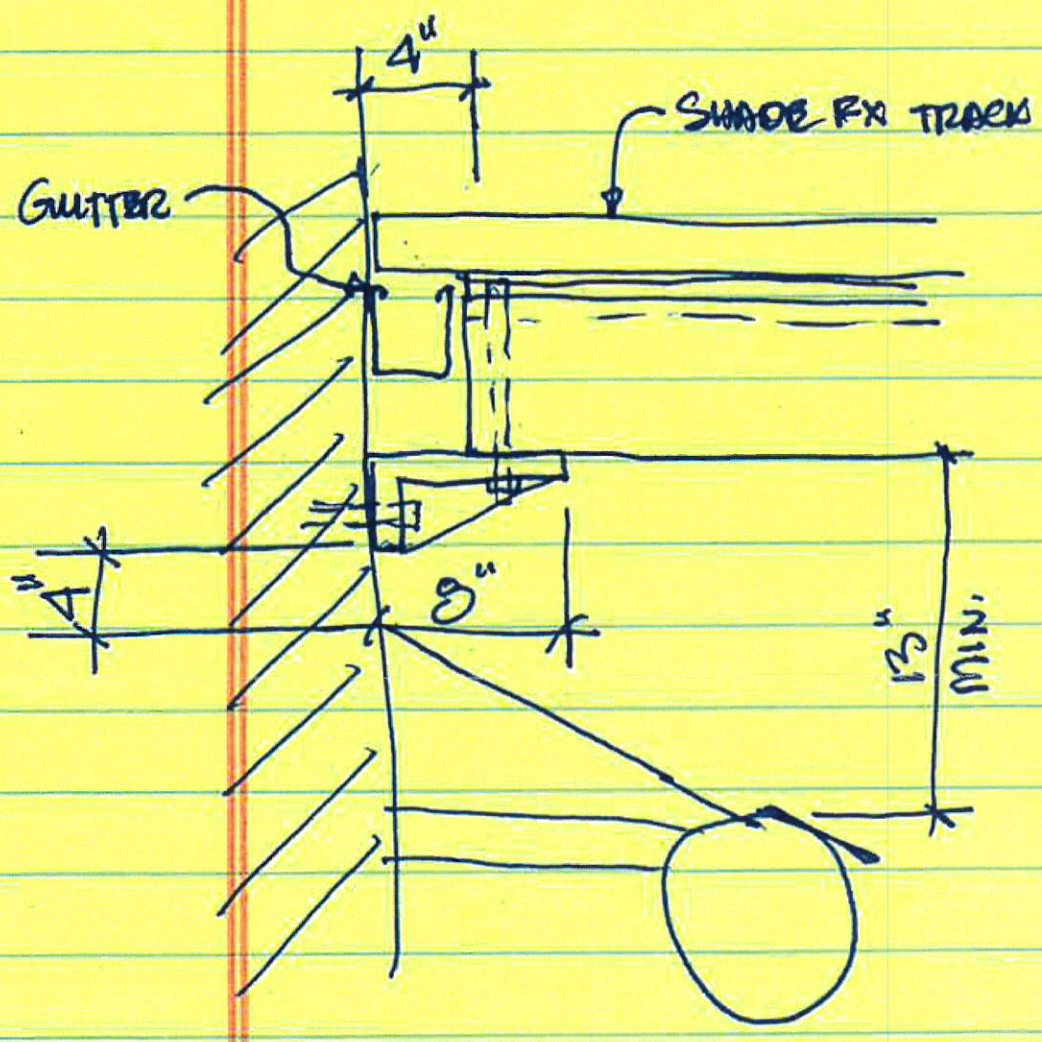

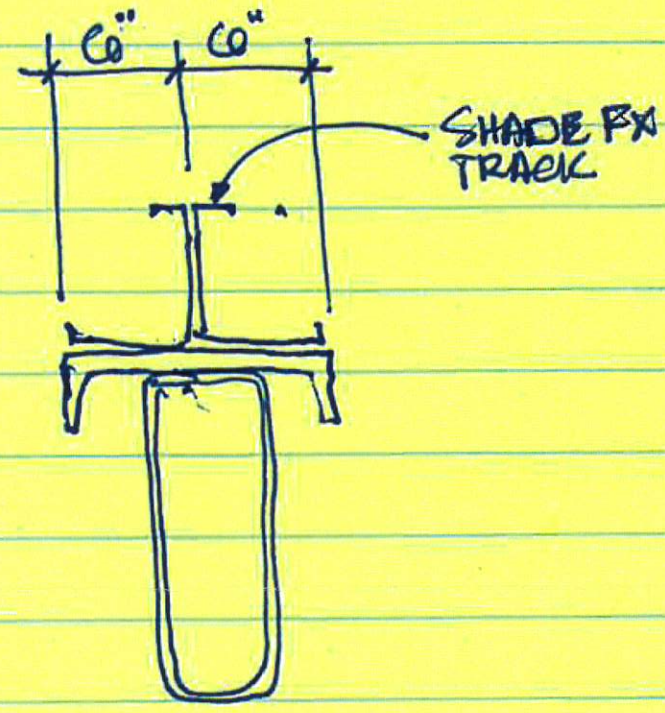

May 20, 2024

Dear Mr. Cormier:

Thank you for the recent correspondence regarding Angelina Restaurant. As we know the restaurant has been operating as an A-2 Assembly Occupancy for many years.

This letter is an effort to outline the current status of the Restaurant:

- The facility is currently approved and posted for 180 people.
- There are two exits from the second floor, one of which exits directly to the street.
- There are two exits from the first floor. One to the front street and the other to the back alley.
- The Second Floor has one unisex Toilet Room.
- The First Floor has one Men's Toilet Room and one Women's Toilet Room. Each room has one toilet and a sink.

I hope we can agree that the current building status is "Preexisting Legal Non-conforming". Now the question becomes can the owners of Angelina's Restaurant do the following:

- Construct a retractable shade and rain structure over a portion of the Dining Patio.
- We are not increasing the occupant lot at all.
- No building area is being added and the space is currently occupied.
- None of the structural support interferes with existing.
- The retractable structure is manufactured by Shade FX, and they have similar roofs in the area.
- The support system will be designed, and stamped by a Wisconsin licensed engineer and submitted to the city.

Please let me know the next step in improving the dining conditions of an historic Green Bay restaurant.

Sincerely,

Steve Klessig
Registered Architect

A 6167-5

ShadeFX™

Technical Information Package

Retractable Roof System

MOTOR OPERATED RETRACTABLE ROOF SYSTEM

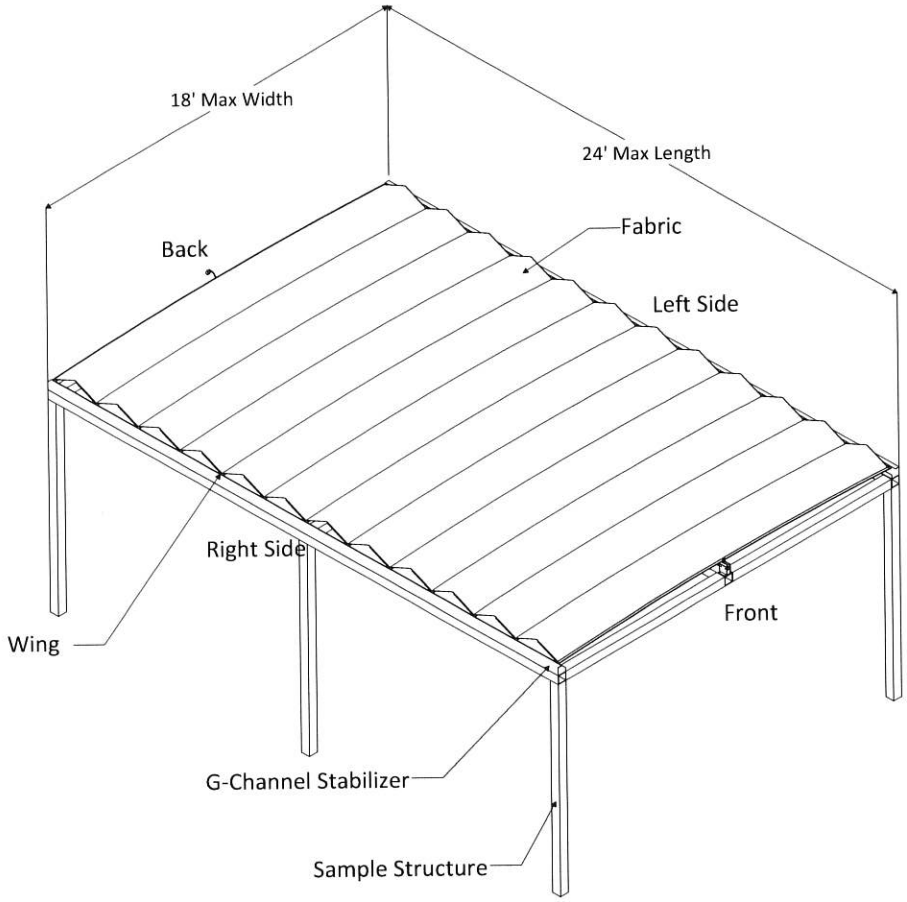

Roof Extended

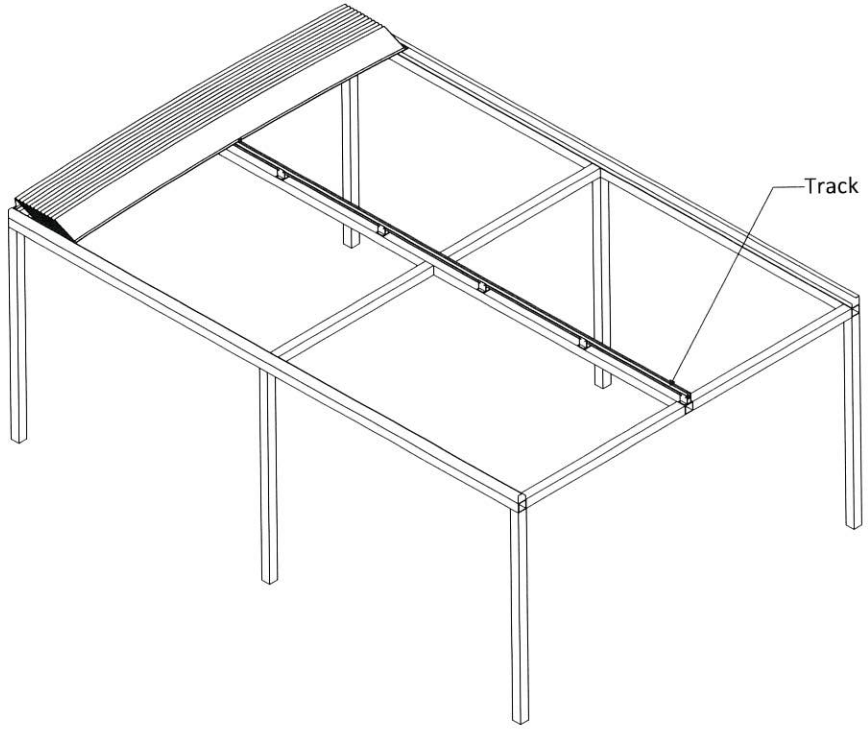

Roof Retracted

ShadeFX™

Notice: All drawings, designs, details, inventions, and development covered hereby are confidential, proprietary, and copyrighted by ShadeFX Canopies Inc., which reserves all patents, or other rights hereto. Materials may not be used, copied, or duplicated, in whole or in part, without the expressed written consent of ShadeFX Canopies Inc. Copyright © 2013, ShadeFX Canopies Inc. All Rights Reserved.

MOTOR OPERATED RETRACTABLE ROOF SYSTEM

Side View

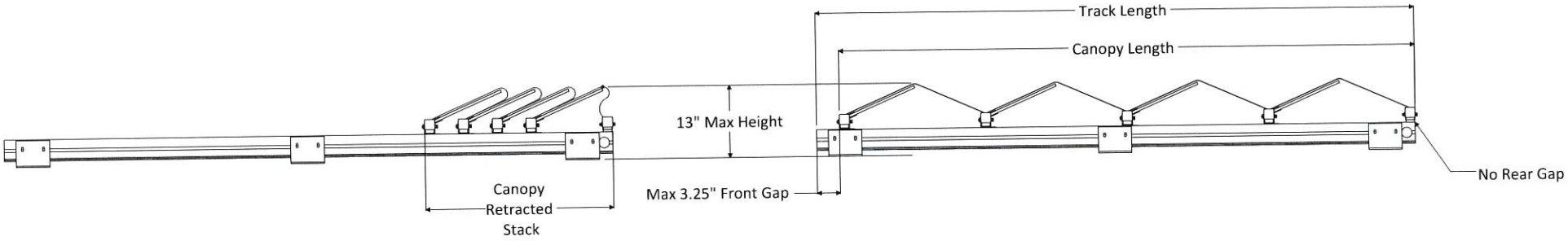

Rear View

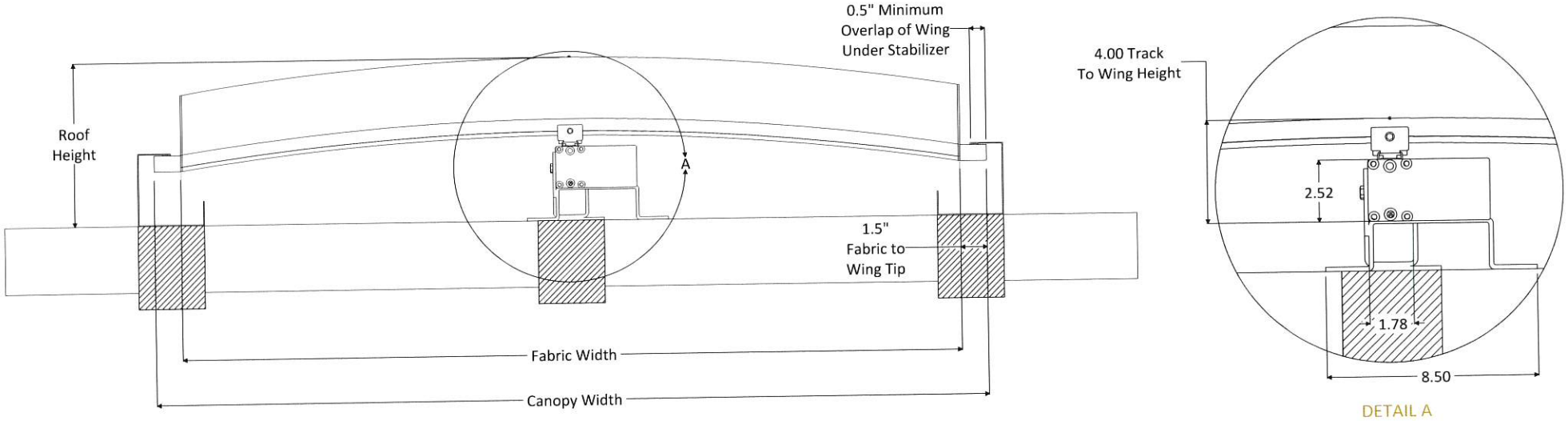

ShadeFX™

Notice: All drawings, designs, details, inventions, and development covered hereby are confidential, proprietary, and copyrighted by ShadeFX Canopies Inc., which reserves all patents, or other rights hereto. Materials may not be used, copied, or duplicated, in whole or in part, without the expressed written consent of ShadeFX Canopies Inc. Copyright © 2013, ShadeFX Canopies Inc. All Rights Reserved.

MOUNTING EXAMPLES

Parallel To Rafters

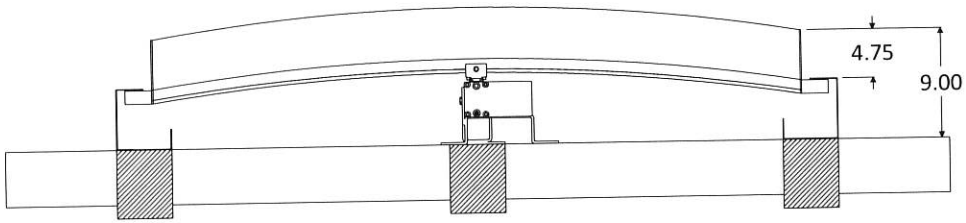

Rear

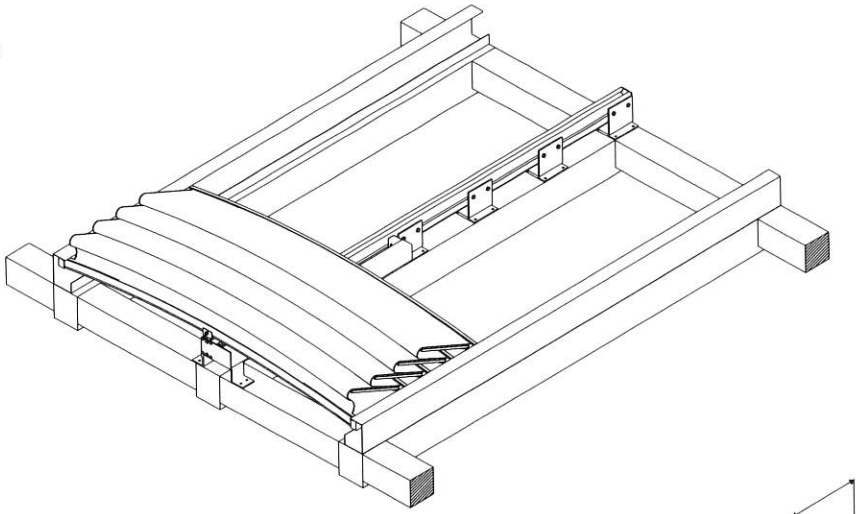

Perpendicular To Rafters

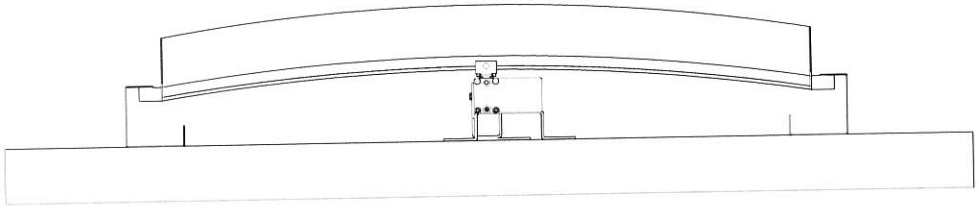

Rear

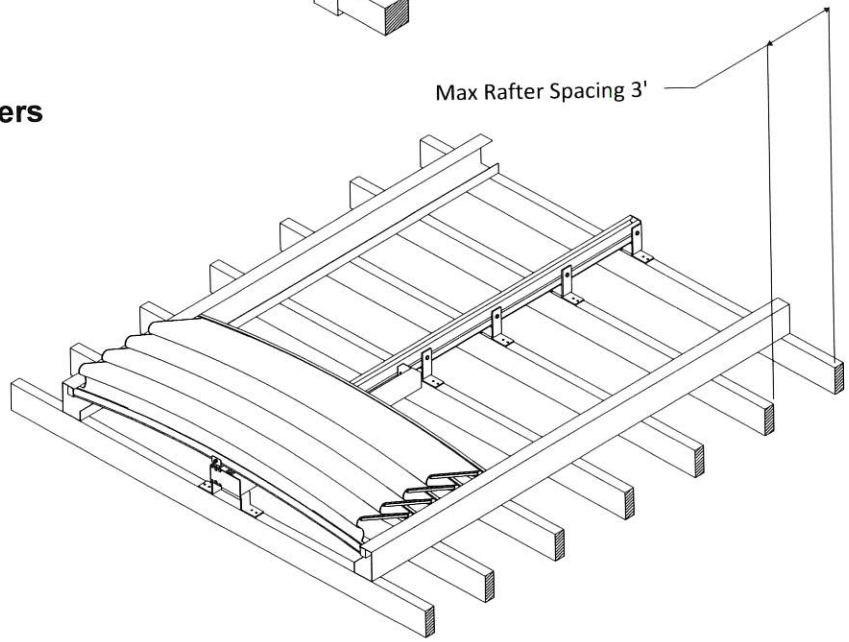

ShadeFX™

Notice: All drawings, designs, details, inventions, and development covered hereby are confidential, proprietary, and copyrighted by ShadeFX Canopies Inc., which reserves all patents, or other rights hereto. Materials may not be used, copied, or duplicated, in whole or in part, without the expressed written consent of ShadeFX Canopies Inc. Copyright © 2013, ShadeFX Canopies Inc. All Rights Reserved.

RAIN MANAGEMENT

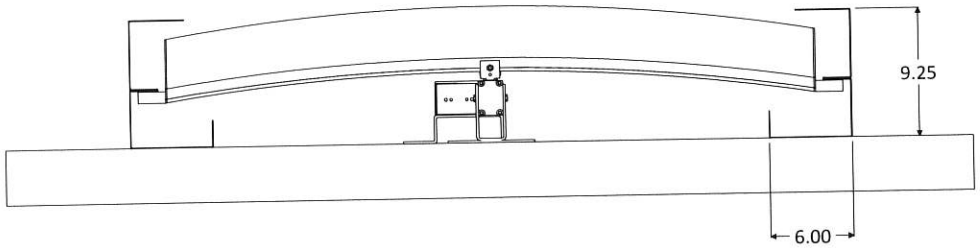

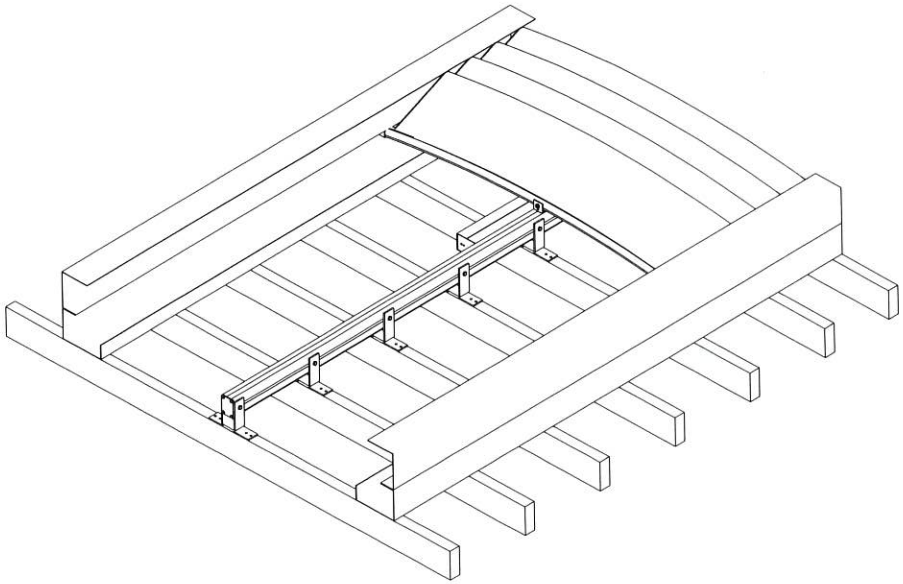

Gutter Stabilizer - Optional

ShadeFX™

Notice: All drawings, designs, details, inventions, and development covered hereby are confidential, proprietary, and copyrighted by ShadeFX Canopies Inc., which reserves all patents, or other rights hereto. Materials may not be used, copied, or duplicated, in whole or in part, without the expressed written consent of ShadeFX Canopies Inc. Copyright © 2013, ShadeFX Canopies Inc. All Rights Reserved.

FASTENERS

Wood Screw

#8 x 3" Robertson Drive
Coated with Shield Guard
for Corrosion Protection

Aluminum / Steel
Tek Screw

1/4 x 1" Hex
Head

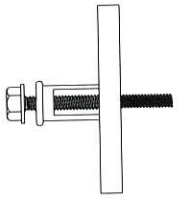

Toggle Bolt

MOUNTING OPTIONS

Standard

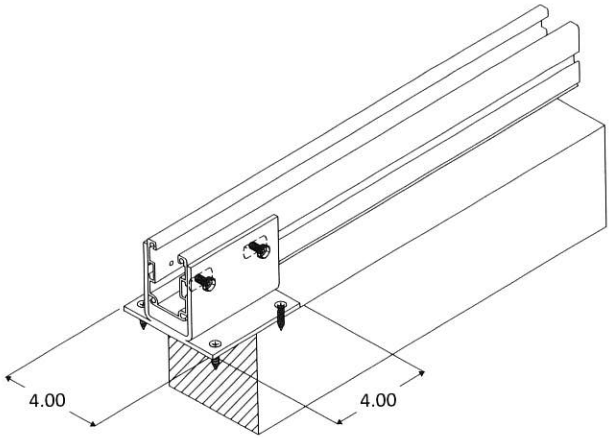

Parallel to Rafters

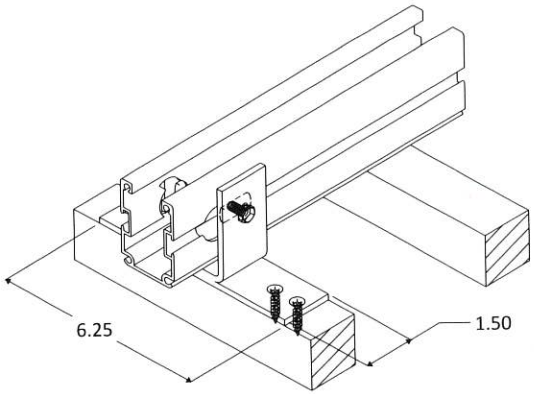

Perpendicular to Rafters

STABILIZATION OPTIONS

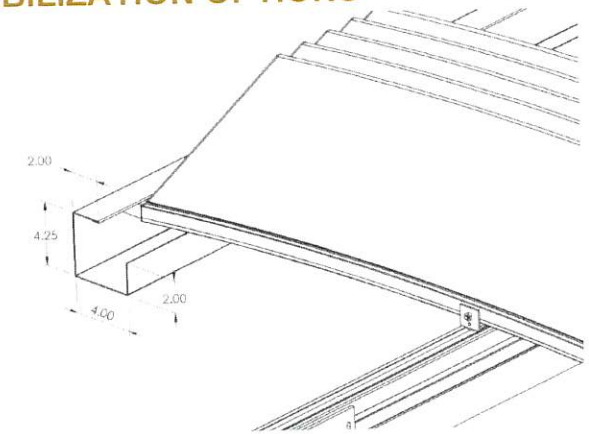

G-Channel Stabilizer

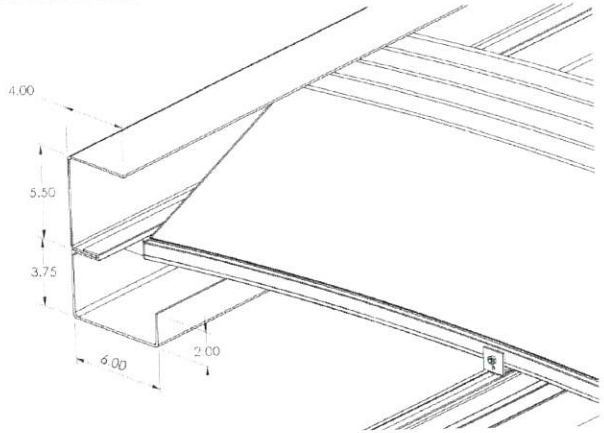

Gutter Stabilizer

ShadeFX™

Notice: All drawings, designs, details, inventions, and development covered hereby are confidential, proprietary, and copyrighted by ShadeFX Canopies Inc., which reserves all patents, or other rights hereto. Materials may not be used, copied, or duplicated, in whole or in part, without the expressed written consent of ShadeFX Canopies Inc. Copyright © 2013, ShadeFX Canopies Inc. All Rights Reserved.

MOTOR ACCESSORIES

Wind Sensor

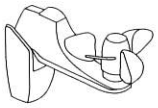

A radio receiver enables the automatic control of canopy when combined with wind sensor.

MOTOR SIZES

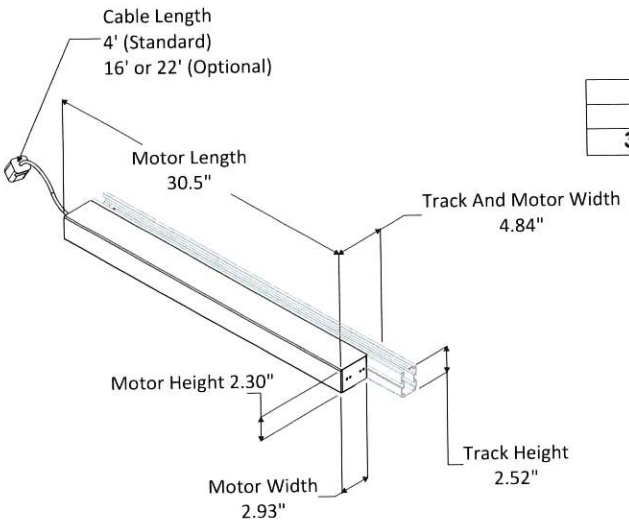

2A
120/60/50 V GFI
3-Prong (Grounded) Connection Required

* SHARING A POWER SOURCE WITH OTHER DEVICES MAY CAUSE A DROP IN PERFORMANCE. FOR BEST RESULTS DO NOT RUN ANY OTHER HIGH POWERED EQUIPMENT FROM THE SAME SOURCE

Motor Control

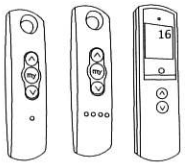

1-, 5- or 16-channel remote control

3-, 4- or 5- channel wall-mounted switch

The Somfy TaHoma® gateway and smart phone app provides convenient and customized control of canopy operation

Home Automation Dry Contact Interface enables communication of third-party home automation system and canopy

ShadeFX™

Notice: All drawings, designs, details, inventions, and development covered hereby are confidential, proprietary, and copyrighted by ShadeFX Canopies Inc., which reserves all patents, or other rights hereto. Materials may not be used, copied, or duplicated, in whole or in part, without the expressed written consent of ShadeFX Canopies Inc. Copyright © 2013, ShadeFX Canopies Inc. All Rights Reserved.

CERTIFICATE OF APPROPRIATENESS APPLICATION

All fields must be completed before application will be processed.

Department of Community
and Economic Development
100 N. Jefferson Street, Rm 608
Green Bay, WI 54301-5026
(920) 448-3300 - phone
(920) 448-3426 - fax
www.greenbaywi.gov

File Number: _____

1. Address: 117 N Adams St. Green Bay, WI 54301
2. Parcel #: 12-116
3. Owner of record: Eddie Boyce Phone: 920-437-7248

117 N Adams St.	Green Bay	WI	54301
(Address)	(City)	(State)	(Zip)

4. Applicant's Name: Doug Schwalbe, Project Manager, Keller

N216 HWY 55	Kaukauna	WI	54130
(Address)	(City)	(State)	(Zip)

920-766-5795	920-427-4425	dschwalbe@kellerbuilds.com
(Office Phone #)	(Cell Phone #)	(E-mail Address)

5. Present use of Property: Angelina Restaurant
6. Description of Project: Describe each item of the project separately. Include existing condition(s) when describing item. Also, describe the proposed work, material(s) to be used and the impact the item would have on existing historic or architectural features of the property. (Attach additional sheets if necessary.)

Provide a retractable rain and shade structure in a portion of our existing courtyard. Steel beams spanning from wall to wall of the courtyard will support the structure. Electric motors will retract and extend canopy depending on need for shade or rain shelter. Rain water that falls on system will be directed to both walls and collected via gutter system and released to a nearby catch basin.

7. Attachments:
   - [x] Site Plan of the lot (Please indicate direction of north, dimensions, structures, etc.)
   - [x] Sketches, drawings, building and streetscape elevations, and/or annotated photos
   - [x] Exterior photos
   - [x] Specifications (materials) for the project
   - [ ] Phased development plan for the project (if proposed in phases)
   - [ ] Inspection report (required for demolition requests only)
   - [ ] Cost estimates for all the proposed work
   - [ ] Other (please explain): Technical specs for Shade FX system.

CERTIFICATE OF APPROPRIATENESS APPLICATION (Continued)

8. The following action is requested:

☑ **Approval of COA by Landmarks Commission** (projects not listed below)

☐ **Approval of COA by staff:** (Check all that apply)

- ☐ Roof repair/replacement
- ☐ Gutter repair/replacement
- ☐ Private sidewalk and driveway repair/replacement of the same dimensions and orientation
- ☐ Chimney repair and tuckpointing according to the Secretary of the interior standards and in appropriate color and design
- ☐ Installation of fences
- ☐ Storm window or storm door installation, repair, or replacement
- ☐ Installation of glass blocks in basement window openings
- ☐ Painting of existing unpainted brick
- ☐ Unattached nonvisible accessory structures
- ☐ Replacement of identical siding
- ☐ Replacement or repair to porches identical to existing style and materials
- ☐ Commercial sign replacement of identical dimensions

Petitioner Signature: [signature] KELLER, INC.

Owner Signature: [signature] DBA Angelina Inc.

Date Received: _____ Staff: _____

Report to the
Landmarks Commission of the City of Green Bay

MEETING DATE	PREPARED BY
July 17, 2024	Jason Flatt, Staff

AGENDA ITEM # E.3

(COA 24-30) Consideration with possible action on a design review for rear stair replacement located at 735 S Jackson Street.

BACKGROUND

735 S Jackson, built c. 1920, is a contributing property in the Astor NRHP Historic District. The house currently maintains a fair degree of historic integrity, including its integrity of setting, location, association, feeling, and workmanship (insofar as what is known about the history of the property). The house is also presumed to maintain integrity of design. As noted in the stewardship notes, some exterior materials and windows have been replaced. The garage does not appear to be particularly old and likely does not date to the district's period of significance. This garage is largely (but not completely) hidden from public view.

This COA application proposes to replace existing wooden back steps with new composite steps and a new composite landing (small deck at back door). Railings proposed will be custom ironwork similar to the existing railing on the front of the house.

LC staff notes that this back door and proposed steps are not visible from any public right-of-way.

RECOMMENDATION

LC staff recommends approval of the proposed back steps, railings, and landing, noting that the existing material is not historic (of the period of significance), and noting that this area of the house is hidden from public view.

FISCAL IMPACT

ATTACHMENTS

1. COA 24-30 Map
2. COA 24-30 back steps plan view
3. COA 24-30 Back Steps
4. COA 24-30 Back Steps Details
5. COA 24-30 Back Steps Railing
6. COA 24-30 Property Detail Sheet
7. COA 24-30 Application

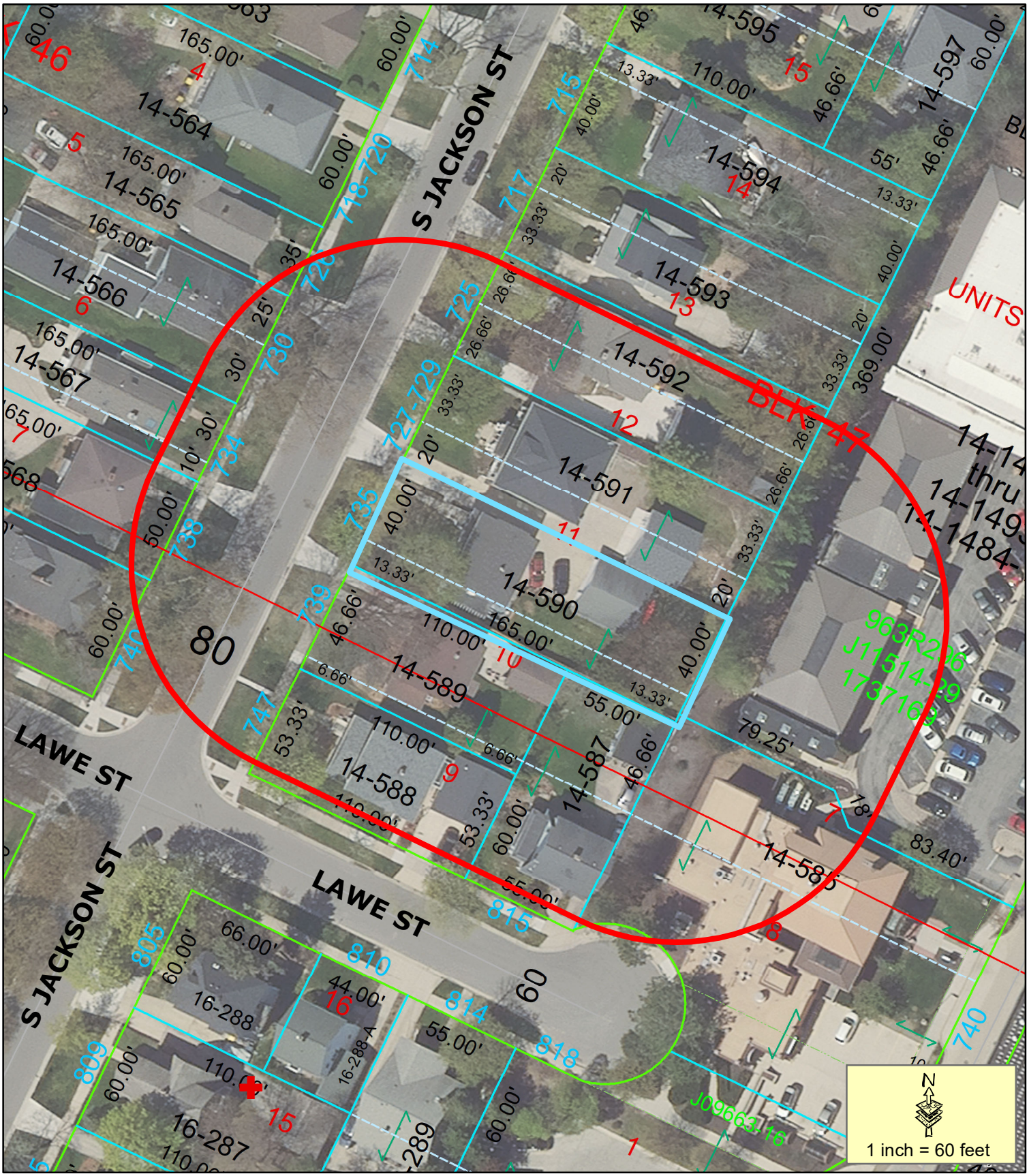

(COA 24-30) Rear Step Replacement at 735 S Jackson

This is a compilation of records and data located in various City of Green Bay offices and is to be used for reference purposes only. The City of Green Bay is not responsible for any inaccuracies or unauthorized use of the information contained within. No warranties are implied.
Map prepared by DB

735 S Jackson St

100' Notification Area

14-592
BLK 47
12
727-729
33.33'
20'
14-591
26.66'
734
10'
30'
735
40.00'
11
738
13.33'
14-59
Proposed Steps
739
46.66'
110.00'
55.00'
10
80
14-589
6.66'
13.33'
55.00'
40.00'
963R296
J11514-29
1737169
747
53.33'
110.00'
14-588
9
14-587
46.66'
79.25'
14-14
14-1484

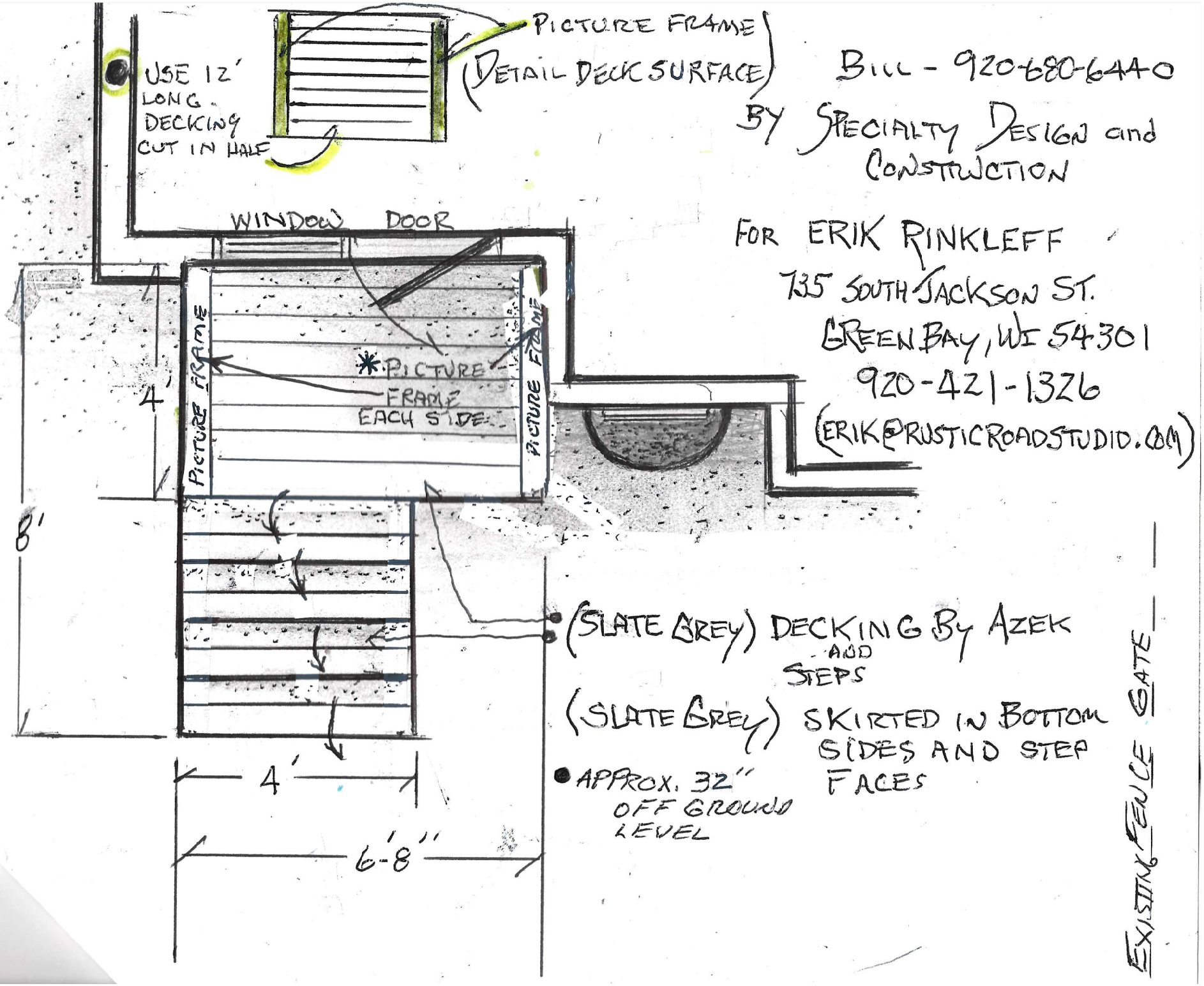
PICTURE FRAME
(DETAIL DECK SURFACE)
USE 12' LONG DECKING CUT IN HALF
BILL - 920-680-6440
BY SPECIALTY DESIGN and CONSTRUCTION
FOR ERIK RINKLEFF
735 SOUTH JACKSON ST.
GREEN BAY, WI 54301
920-421-1326
(ERIK@RUSTICROADSTUDIO.COM)
WINDOW
DOOR
PICTURE FRAME
PICTURE FRAME
*PICTURE FRAME EACH SIDE
4'
8'
4'
6'-8"
(SLATE GREY) DECKING AND STEPS BY AZEK
(SLATE GREY) SKIRTED IN BOTTOM SIDES AND STEP FACES
APPROX. 32" OFF GROUND LEVEL
EXISTING FENCE GATE

735

Address:	735	S Jackson	St			
Parcel No.:	14-590					
WI AHI No.:	52295					
Historic Name:						
Built:	1920	c. 1920				
Historic Use:	house					
Architectural Style:	vernacular					
Wall Material:						
Architect:						
National Register:	2/27/1980					
State Register:	1/1/1989					
Other:						
NRHP nomination link:						
http://focus.nps.gov/pdfhost/docs/NRHP/Text/80000107.pdf						
(district nomination)						
Notes:						
	"This house is stuccoed at the first story and clapboarded at the second.					
	It is identical to 725 South Jackson."					
	Owner not listed					
	- per NRHP nomination					
Stewardship:						
Character -	Overall form & fenestration. Side-gambreled roof with wide front dormer.					
	Small arched entry. Dutch colonial revival stylings. Eave returns.					
Features -	unknown.					
Alterations -	Replacement vinyl siding. Stucco possibly not original.					
	Replacement windows (?). One story wing to north possibly an addition.					
Misc -						

CERTIFICATE OF APPROPRIATENESS APPLICATION

All fields must be completed before application will be processed.

Department of Community
and Economic Development
100 N. Jefferson Street, Rm 608
Green Bay, WI 54301-5026
(920) 448-3300 - phone
(920) 448-3426 - fax
www.greenbaywi.gov

File Number: _____

1. Address: 735 South Jackson Street, Green Bay WI 54301
2. Parcel #: 14-590
3. Owner of record: Erik & Mary Ann Rinkleff Phone: 9204211326

   735 South Jackson Street, Green Bay WI 5

   (Address) (City) (State) (Zip)
4. Applicant's Name: Erik Rinkleff

   735 South Jackson Street, Green Bay WI 5

   (Address) (City) (State) (Zip)

   9204211326 erik@rusticroadstudio.com

   (Office Phone #) (Cell Phone #) (E-mail Address)
5. Present use of Property: Home
6. Description of Project: Describe each item of the project separately. Include existing condition(s) when describing item. Also, describe the proposed work, material(s) to be used and the impact the item would have on existing historic or architectural features of the property. (Attach additional sheets if necessary.)

   We need to add a set of exterior steps to the back of house.
7. Attachments:
   - [x] Site Plan of the lot (Please indicate direction of north, dimensions, structures, etc.)
   - [x] Sketches, drawings, building and streetscape elevations, and/or annotated photos
   - [x] Exterior photos
   - [x] Specifications (materials) for the project
   - [ ] Phased development plan for the project (if proposed in phases)
   - [ ] Inspection report (required for demolition requests only)
   - [x] Cost estimates for all the proposed work
   - [ ] Other (please explain): _____

CERTIFICATE OF APPROPRIATENESS APPLICATION (Continued)

8. The following action is requested:

☑ **Approval of COA by Landmarks Commission** (projects not listed below)

☐ **Approval of COA by staff:** (Check all that apply)

- ☐ Roof repair/replacement
- ☐ Gutter repair/replacement
- ☐ Private sidewalk and driveway repair/replacement of the same dimensions and orientation
- ☐ Chimney repair and tuckpointing according to the Secretary of the interior standards and in appropriate color and design
- ☐ Installation of fences
- ☐ Storm window or storm door installation, repair, or replacement
- ☐ Installation of glass blocks in basement window openings
- ☐ Painting of existing unpainted brick
- ☐ Unattached nonvisible accessory structures
- ☐ Replacement of identical siding
- ☐ Replacement or repair to porches identical to existing style and materials
- ☐ Commercial sign replacement of identical dimensions

Petitioner Signature: Erik Rinkleff

Owner Signature: Erik Rinkleff

Date Received: _____ Staff: _____

Report to the
Landmarks Commission of the City of Green Bay

MEETING DATE	PREPARED BY
July 17, 2024	Jason Flatt, Staff

AGENDA ITEM # E.4

(COA 24-36) Consideration with possible action on a design review for window replacement located at 806 S Quincy Street.

BACKGROUND

806 S Quincy, built c. 1895, is a contributing property in the Astor NRHP Historic District. The house currently maintains its integrity of setting, location, and association. As noted in the stewardship notes, some exterior materials and windows have been replaced. The upper story windows were replaced with Pella wood windows in 2004.

This COA application proposes to replace the first story windows with either Pella wood or Pella vinyl windows.

Some of the more relevant portions of the Secretary of the Interior's (SOI) Standards for Rehabilitation are as follows (note particularly #6).
2. The historic character of a property shall be retained and preserved. The removal of historic materials or alteration of features and spaces that characterize a property shall be avoided.
4. Changes to a property that have acquired historic significance in their own right will be retained and preserved.
5. Distinctive features, finishes, and construction techniques or examples of craftsmanship that characterize a property shall be preserved.
6. Deteriorated historic features shall be repaired rather than replaced. Where the severity of deterioration requires replacement of a distinctive feature, the new feature shall match the old in design, color, texture, and other visual qualities and, where possible, materials. Replacement of missing features shall be substantiated by documentary, physical, or pictorial evidence.

LC staff notes the following discrepancies and incompleteness of the COA application.

1. Quotes for Pella wood and Pella vinyl windows have been provided, each identifying 23 replacement windows. The COA application states that 21 windows are to be replaced.
2. The COA application includes several photos of existing windows, but there is no information showing the correlation between the photos and the proposed replacement windows.
3. The quotes for the replacement windows identify a variety of "grilles" within the text ("SDL w/Spacers" for some of the wood windows, "GBG" for some of the vinyl windows). Note – Pella's "SDL w/ Spacer" satisfy SHPO requirement, "GBG" does not.
4. Application states that replacement windows will match existing "grille" appearances, but this cannot be verified with the information provided and, in the case of the diamond-pane window, does not appear to be true.
5. Visual Light Transmittance values for the proposed replacement windows range from 47 to 62 (approx.).

LC staff notes that replacement windows are generally viewed favorably by the LC (contrary to SOI

standards); however, Wisconsin SHPO lists several requirements for replacement windows on designated historic buildings. Those Wisconsin requirements effectively address SOI standard # 6 and state, "The reproduction should have an exterior grid, spacer bars between the glass and an interior grid." Additionally, Wisconsin SHPO requirements state, "The glass must be clear and nonreflective with a visual light transmittance of 72 or higher." Reference https://www.wisconsinhistory.org/Records/Article/CS4308

RECOMMENDATION

LC staff recommends requesting clarification to match existing windows with the proposed replacement to ensure that the existing "grille" appearance is maintained.

LC staff recommends that replacement Pella windows have either "SDL w/ Spacer" or "ILT" grilles, noting that "GBG" grilles do not satisfy SHPO requirements.

FISCAL IMPACT

ATTACHMENTS

1. COA 24-36 Map
2. COA 24-36 Street View
3. COA 24-36 Pics 1
4. COA 24-36 Pics 2
5. COA 24-36 Pics 3
6. COA 24-36 Pella WOOD Windows and Doors Quote
7. COA 24-36 Pella VINYL Windows and Doors Quote
8. COA 24-36 Property Detail Sheet
9. COA 24-36 Application

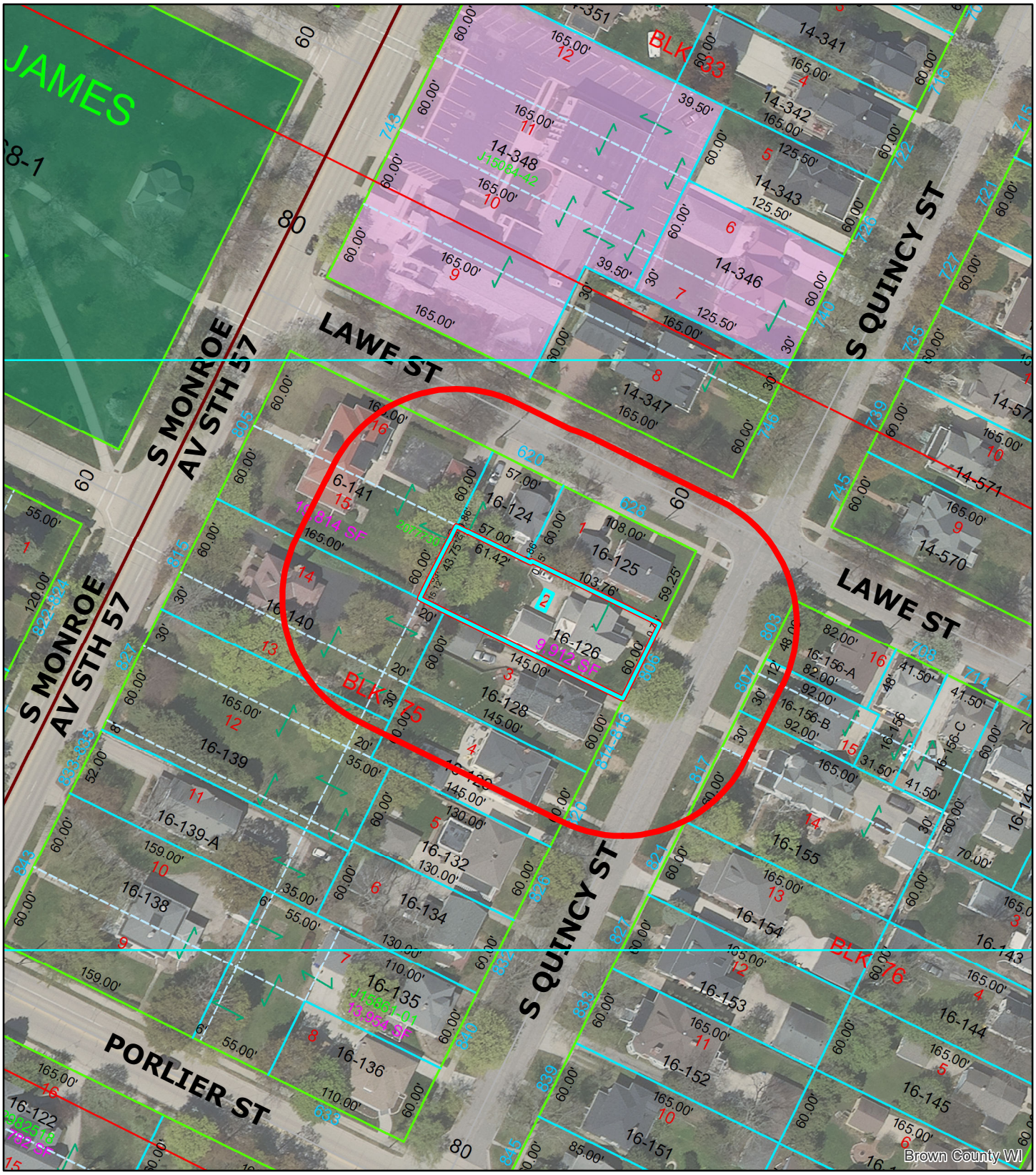

(COA 24-36) Window Replacement at 806 S Quincy Street

Feet
0 25 50 100

N

806 S Quincy

100-ft. Notification Area

This is a compilation of records and data located in various City of Green Bay offices and is to be used for reference purposes only. The City of Green Bay is not responsible for any inaccuracies or unauthorized use of the information contained within. No warranties are implied. Map prepared by City of Green Bay Department of Community and Economic Development. E.R. 09 Jul 2024 X:\Planning\Basemaps\template_8.5x11.mxd

Proposal - Detailed

Pella Window and Door Showroom of Green Bay
500 Pilgrim Way
Green Bay, WI 54304
Phone: (920) 435-3791 **Fax:** (920) 435-0377

Sales Rep Name: Pamperin, Ryan
Sales Rep Phone: 920-634-8432
Sales Rep E-Mail: rpamperin@pellawi.com
Sales Rep Fax:

Customer Information	Project/Delivery Address	Order Information
Bryan Lipke 806 S Quincy St GREEN BAY, WI 54301-3629 **Primary Phone:** (920) 471-7023 **Mobile Phone:** **Fax Number:** **E-Mail:** blipke@new.rr.com **Contact Name:** **Great Plains #:** 1002271123 **Customer Number:** 1006834549 **Customer Account:** 1002271123	**Bryan Lipke - 806 South Quincy Street, Green Bay,** 806 South Quincy Street **Lot #** Green Bay, WI 54301 **County:** **Owner Name:** Bryan Lipke **Owner Phone:** (920) 471-7023	**Quote Name:** Bryan Lipke - 806 South Quincy Street, Green Bay, **Order Number:** 780 **Quote Number:** **18370536** **Order Type:** Installed Sales **Wall Depth:** **Payment Terms:** Dep/Pd on Installation **Tax Code:** **Cust Delivery Date:** None **Quoted Date:** 7/1/2024 **Contracted Date:** **Booked Date:** **Customer PO #:**

Line #	Location:	Attributes
10	Lower Stairwell	

Viewed From Exterior

PK #
2169

Lifestyle, Direct Set, Fixed Frame, Without HGP, White

Item Price	Qty	Ext'd Price
$1,888.29	1	$1,888.29

1: SizeNon-Standard Size Fixed Frame Direct Set
General Information: No Package, Without Hinged Glass Panel, Interior Glazed, Standard, Clad, Pine, 5", 3 11/16"
Exterior Color / Finish: Standard Enduraclad, White
Interior Color / Finish: Prefinished White Paint Interior
Glass: Insulated Dual Low-E Advanced Low-E Insulating Glass Argon Non High Altitude
Performance Information: U-Factor 0.28, SHGC 0.32, VLT 0.62, CPD PEL-N-18-04208-00001, Performance Class AW, PG 90, Calculated Positive DP Rating 90, Calculated Negative DP Rating 90, STC 27, OITC 22
Grille: No Grille,

RIPFT001 - 01 Pocket Fit 0 - 101 UI Qty 1

For more information regarding the finishing, maintenance, service and warranty of all Pella® products, visit the Pella® website at www.pella.com

Line #	Location:	Attributes
15	Upper Stairwell	

Viewed From Exterior

PK #
2169

Lifestyle, Direct Set, Fixed Frame, Without HGP, White

Item Price	Qty	Ext'd Price
$2,193.97	1	$2,193.97

1: SizeNon-Standard Size Fixed Frame Direct Set
General Information: No Package, Without Hinged Glass Panel, Interior Glazed, Standard, Clad, Pine, 5", 3 11/16"
Exterior Color / Finish: Standard Enduraclad, White
Interior Color / Finish: Prefinished White Paint Interior
Glass: Insulated Dual Low-E Advanced Low-E Insulating Glass Argon Non High Altitude
Performance Information: U-Factor 0.29, SHGC 0.29, VLT 0.55, CPD PEL-N-18-04210-00001, Performance Class AW, PG 85, Calculated Positive DP Rating 85, Calculated Negative DP Rating 85, STC 27, OITC 22
Grille: SDL w/Spacer, No Custom Grille, 7/8", Traditional (1W2H)

RIPFT001 - 01 Pocket Fit 0 - 101 UI Qty 1

Line #	Location:	Attributes
20	Living Room	

Viewed From Exterior

PK #
2169

Lifestyle, Double Hung, Without HGP, White

Item Price	Qty	Ext'd Price
$2,263.42	2	$4,526.84

1: SizeNon-Standard Size Double Hung, Equal
General Information: No Package, Without Hinged Glass Panel, Clad, Pine, 5", 3 11/16", Jambliner Color: **Gray**
Exterior Color / Finish: **Standard Enduraclad, White**
Interior Color / Finish: **Prefinished White Paint Interior**
Glass: **Insulated Low-E Advanced Low-E Insulating Glass Argon Non High Altitude**
Hardware Options: **Cam-Action Lock, 1 Lock, Champagne, No Limited Opening Hardware, Order Sash Lift, 1 Lift, No Integrated Sensor**
Screen: **Full Screen, White, InView™**
Performance Information: **U-Factor 0.30, SHGC 0.30, VLT 0.56, CPD PEL-N-35-00426-00001, Performance Class LC, PG 30, Calculated Positive DP Rating 30, Calculated Negative DP Rating 30, STC 27, OITC 23, Clear Opening Width 20.312, Clear Opening Height 31.625, Clear Opening Area 4.460882, Egress Does not meet typical United States egress, but may comply with local code requirements**
Grille: **No Grille,**

RIPFT001 - 01 Pocket Fit 0 - 101 UI Qty 1

Line #	Location:	Attributes
25	Living Room	

Viewed From Exterior

PK #
2169

Lifestyle, Direct Set, Fixed Frame, Without HGP, White

Item Price	Qty	Ext'd Price
$4,679.93	1	$4,679.93

1: SizeNon-Standard Size Fixed Frame Direct Set
General Information: No Package, Without Hinged Glass Panel, Interior Glazed, Standard, Clad, Pine, 5", 3 11/16"
Exterior Color / Finish: Standard Enduraclad, White
Interior Color / Finish: Prefinished White Paint Interior
Glass: Insulated Dual Low-E Advanced Low-E Insulating Glass Argon Non High Altitude
Performance Information: U-Factor 0.27, SHGC 0.32, VLT 0.60, CPD PEL-N-18-04240-00001, Performance Class AW, PG 45, Calculated Positive DP Rating 45, Calculated Negative DP Rating 45, STC 28, OITC 24
Grille: No Grille,

RIPFT003 - 03 Pocket Fit131 - 150 UI Qty 1

Line #	Location:	Attributes
30	Living Room	

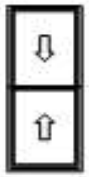

Viewed From Exterior

PK #
2169

Lifestyle, Double Hung, Without HGP, White

Item Price	Qty	Ext'd Price
$2,340.09	1	$2,340.09

1: SizeNon-Standard Size Double Hung, Equal
General Information: No Package, Without Hinged Glass Panel, Clad, Pine, 5", 3 11/16", Jambliner Color: **Gray**
Exterior Color / Finish: **Standard Enduraclad, White**
Interior Color / Finish: **Prefinished White Paint Interior**
Glass: **Insulated Low-E Advanced Low-E Insulating Glass Argon Non High Altitude**
Hardware Options: **Cam-Action Lock, 1 Lock, Champagne, No Limited Opening Hardware, Order Sash Lift, 1 Lift, No Integrated Sensor**
Screen: **Full Screen, White, InView™**
Performance Information: **U-Factor 0.30, SHGC 0.30, VLT 0.56, CPD PEL-N-35-00426-00001, Performance Class LC, PG 30, Calculated Positive DP Rating 30, Calculated Negative DP Rating 30, STC 27, OITC 23, Clear Opening Width 25.312, Clear Opening Height 31.625, Clear Opening Area 5.558972, Egress Meets Typical for ground floor 5.0 sqft (E1) (United States Only)**
Grille: **No Grille,**

RIPFT001 - 01 Pocket Fit 0 - 101 UI Qty 1

Line #	Location:	Attributes
35	Dining Room	

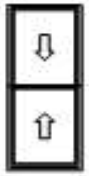

Viewed From Exterior

Lifestyle, Double Hung, Without HGP, White

Item Price	Qty	Ext'd Price
$2,340.09	2	$4,680.18

PK #
2169

1: SizeNon-Standard Size Double Hung, Equal
General Information: No Package, Without Hinged Glass Panel, Clad, Pine, 5", 3 11/16", Jambliner Color: **Gray**
Exterior Color / Finish: **Standard Enduraclad, White**
Interior Color / Finish: **Prefinished White Paint Interior**
Glass: **Insulated Low-E Advanced Low-E Insulating Glass Argon Non High Altitude**
Hardware Options: **Cam-Action Lock, 1 Lock, Champagne, No Limited Opening Hardware, Order Sash Lift, 1 Lift, No Integrated Sensor**
Screen: **Full Screen, White, InView™**
Performance Information: **U-Factor 0.30, SHGC 0.30, VLT 0.56, CPD PEL-N-35-00426-00001, Performance Class LC, PG 30, Calculated Positive DP Rating 30, Calculated Negative DP Rating 30, STC 27, OITC 23, Clear Opening Width 25.312, Clear Opening Height 31.625, Clear Opening Area 5.558972, Egress Meets Typical for ground floor 5.0 sqft (E1) (United States Only)**
Grille: **No Grille,**

RIPFT001 - 01 Pocket Fit 0 - 101 UI Qty 1

Line #	Location:	Attributes
40	Dining Room	

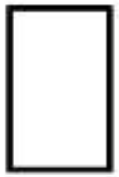

Viewed From Exterior

Lifestyle, Direct Set, Fixed Frame, Without HGP, White

Item Price	Qty	Ext'd Price
$2,519.11	1	$2,519.11

PK #
2169

1: SizeNon-Standard Size Fixed Frame Direct Set
General Information: No Package, Without Hinged Glass Panel, Interior Glazed, Standard, Clad, Pine, 5", 3 11/16"
Exterior Color / Finish: Standard Enduraclad, White
Interior Color / Finish: Prefinished White Paint Interior
Glass: Insulated Dual Low-E Advanced Low-E Insulating Glass Argon Non High Altitude
Performance Information: U-Factor 0.28, SHGC 0.32, VLT 0.62, CPD PEL-N-18-04208-00001, Performance Class AW, PG 45, Calculated Positive DP Rating 45, Calculated Negative DP Rating 45, STC 27, OITC 22
Grille: No Grille,

RIPFT003 - 03 Pocket Fit131 - 150 UI Qty 1

Line #	Location:	Attributes
45	Kitchen Sink	

Viewed From Exterior

Lifestyle, Casement Left, Without HGP, White

Item Price	Qty	Ext'd Price
$2,327.51	1	$2,327.51

PK # 2169

1: SizeNon-Standard Size Left Casement
General Information: No Package, Without Hinged Glass Panel, Clad, Pine, 5", 3 11/16"
Exterior Color / Finish: Standard Enduraclad, White
Interior Color / Finish: Prefinished White Paint Interior
Glass: Insulated Low-E Advanced Low-E Insulating Glass Argon Non High Altitude
Hardware Options: Wash Hinge Hardware, Fold-Away Crank, Champagne, No Window Opening Control Device, No Limited Opening Hardware, No Integrated Sensor
Screen: Full Screen, White, InView™
Performance Information: U-Factor 0.29, SHGC 0.25, VLT 0.47, CPD PEL-N-14-00679-00001, Performance Class LC, PG 50, Calculated Positive DP Rating 50, Calculated Negative DP Rating 50, STC 25, OITC 22, Clear Opening Width 10.25, Clear Opening Height 41.625, Clear Opening Area 2.962891, Egress Does not meet typical United States egress, but may comply with local code requirements
Grille: SDL w/Spacer, No Custom Grille, 7/8", Traditional (1W2H)

RIPFT001 - 01 Pocket Fit 0 - 101 UI Qty 1

Line #	Location:	Attributes
50	Kitchen Sink	

Viewed From Exterior

Lifestyle, Casement Right, Without HGP, White

Item Price	Qty	Ext'd Price
$2,327.51	1	$2,327.51

PK # 2169

1: SizeNon-Standard Size Right Casement
General Information: No Package, Without Hinged Glass Panel, Clad, Pine, 5", 3 11/16"
Exterior Color / Finish: Standard Enduraclad, White
Interior Color / Finish: Prefinished White Paint Interior
Glass: Insulated Low-E Advanced Low-E Insulating Glass Argon Non High Altitude
Hardware Options: Wash Hinge Hardware, Fold-Away Crank, Champagne, No Window Opening Control Device, No Limited Opening Hardware, No Integrated Sensor
Screen: Full Screen, White, InView™
Performance Information: U-Factor 0.29, SHGC 0.25, VLT 0.47, CPD PEL-N-14-00679-00001, Performance Class LC, PG 50, Calculated Positive DP Rating 50, Calculated Negative DP Rating 50, STC 25, OITC 22, Clear Opening Width 10.25, Clear Opening Height 41.625, Clear Opening Area 2.962891, Egress Does not meet typical United States egress, but may comply with local code requirements
Grille: SDL w/Spacer, No Custom Grille, 7/8", Traditional (1W2H)

RIPFT001 - 01 Pocket Fit 0 - 101 UI Qty 1

Line #	Location:	Attributes
60	Mud Room	

Viewed From Exterior

Lifestyle, Direct Set, Fixed Frame, Without HGP, White

Item Price	Qty	Ext'd Price
$2,054.61	2	$4,109.22

PK # 2169

1: SizeNon-Standard Size Fixed Frame Direct Set
General Information: No Package, Without Hinged Glass Panel, Interior Glazed, Standard, Clad, Pine, 5", 3 11/16"
Exterior Color / Finish: Standard Enduraclad, White
Interior Color / Finish: Prefinished White Paint Interior
Glass: Insulated Dual Low-E Advanced Low-E Insulating Glass Argon Non High Altitude
Performance Information: U-Factor 0.29, SHGC 0.29, VLT 0.55, CPD PEL-N-18-04210-00001, Performance Class AW, PG 90, Calculated Positive DP Rating 90, Calculated Negative DP Rating 90, STC 27, OITC 22
Grille: SDL w/Spacer, No Custom Grille, 7/8", Traditional (1W2H)

RIPFT001 - 01 Pocket Fit 0 - 101 UI Qty 1

Line #	Location:	Attributes
65	Mud Room	

Viewed From Exterior

Lifestyle, Direct Set, Fixed Frame, Without HGP, White

Item Price	Qty	Ext'd Price
$2,346.01	1	$2,346.01

PK # 2169

1: SizeNon-Standard Size Fixed Frame Direct Set
General Information: No Package, Without Hinged Glass Panel, Interior Glazed, Standard, Clad, Pine, 5", 3 11/16"
Exterior Color / Finish: Standard Enduraclad, White
Interior Color / Finish: Prefinished White Paint Interior
Glass: Insulated Dual Low-E Advanced Low-E Insulating Glass Argon Non High Altitude
Performance Information: U-Factor 0.29, SHGC 0.29, VLT 0.55, CPD PEL-N-18-04210-00001, Performance Class AW, PG 65, Calculated Positive DP Rating 65, Calculated Negative DP Rating 65, STC 27, OITC 22
Grille: SDL w/Spacer, No Custom Grille, 7/8", Traditional (1W2H)

RIPFT001 - 01 Pocket Fit 0 - 101 UI Qty 1

Line #	Location:	Attributes
70	Mud Room	

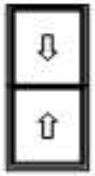

Viewed From Exterior

PK #
2169

Lifestyle, Double Hung, Without HGP, White

Item Price	Qty	Ext'd Price
$2,272.42	1	$2,272.42

1: SizeNon-Standard Size Double Hung, Equal
General Information: No Package, Without Hinged Glass Panel, Clad, Pine, 5", 3 11/16", Jambliner Color: **Gray**
Exterior Color / Finish: **Standard Enduraclad, White**
Interior Color / Finish: **Prefinished White Paint Interior**
Glass: **Insulated Low-E Advanced Low-E Insulating Glass Argon Non High Altitude**
Hardware Options: **Cam-Action Lock, 1 Lock, Champagne, No Limited Opening Hardware, Order Sash Lift, 1 Lift, No Integrated Sensor**
Screen: **Full Screen, White, InView™**
Performance Information: **U-Factor 0.30, SHGC 0.30, VLT 0.56, CPD PEL-N-35-00426-00001, Performance Class LC, PG 40, Calculated Positive DP Rating 40, Calculated Negative DP Rating 40, STC 27, OITC 23, Clear Opening Width 24.562, Clear Opening Height 27.625, Clear Opening Area 4.711981, Egress Does not meet typical United States egress, but may comply with local code requirements**
Grille: **No Grille,**

RIPFT001 - 01 Pocket Fit 0 - 101 UI Qty 1

Line #	Location:	Attributes
75	Back Hall	

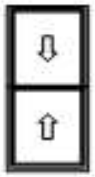

Viewed From Exterior

PK #
2169

Lifestyle, Double Hung, Without HGP, White

Item Price	Qty	Ext'd Price
$2,272.42	1	$2,272.42

1: SizeNon-Standard Size Double Hung, Equal
General Information: No Package, Without Hinged Glass Panel, Clad, Pine, 5", 3 11/16", Jambliner Color: **Gray**
Exterior Color / Finish: **Standard Enduraclad, White**
Interior Color / Finish: **Prefinished White Paint Interior**
Glass: **Insulated Low-E Advanced Low-E Insulating Glass Argon Non High Altitude**
Hardware Options: **Cam-Action Lock, 1 Lock, Champagne, No Limited Opening Hardware, Order Sash Lift, 1 Lift, No Integrated Sensor**
Screen: **Full Screen, White, InView™**
Performance Information: **U-Factor 0.30, SHGC 0.30, VLT 0.56, CPD PEL-N-35-00426-00001, Performance Class LC, PG 40, Calculated Positive DP Rating 40, Calculated Negative DP Rating 40, STC 27, OITC 23, Clear Opening Width 24.562, Clear Opening Height 27.625, Clear Opening Area 4.711981, Egress Does not meet typical United States egress, but may comply with local code requirements**
Grille: **No Grille,**

RIPFT001 - 01 Pocket Fit 0 - 101 UI Qty 1

Line #	Location:	Attributes
80	Above Back Door	

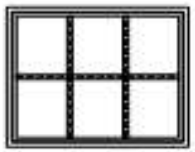

Viewed From Exterior

PK #
2169

Lifestyle, Direct Set, Fixed Frame, Without HGP, White

Item Price	Qty	Ext'd Price
$2,354.00	1	$2,354.00

1: SizeNon-Standard Size Fixed Frame Direct Set
General Information: No Package, Without Hinged Glass Panel, Interior Glazed, Standard, Clad, Pine, 5", 3 11/16"
Exterior Color / Finish: Standard Enduraclad, White
Interior Color / Finish: Prefinished White Paint Interior
Glass: Insulated Dual Low-E Advanced Low-E Insulating Glass Argon Non High Altitude
Performance Information: U-Factor 0.29, SHGC 0.29, VLT 0.55, CPD PEL-N-18-04210-00001, Performance Class AW, PG 90, Calculated Positive DP Rating 90, Calculated Negative DP Rating 90, STC 27, OITC 22
Grille: SDL w/Spacer, No Custom Grille, 7/8", Traditional (3W2H)

RIPFT001 - 01 Pocket Fit 0 - 101 UI Qty 1

Line #	Location:	Attributes
85	Office	

Viewed From Exterior

PK #
2169

Lifestyle, Double Hung, Without HGP, White

Item Price	Qty	Ext'd Price
$2,175.73	1	$2,175.73

1: SizeNon-Standard Size Double Hung, Equal
General Information: No Package, Without Hinged Glass Panel, Clad, Pine, 5", 3 11/16", Jambliner Color: **Gray**
Exterior Color / Finish: **Standard Enduraclad, White**
Interior Color / Finish: **Prefinished White Paint Interior**
Glass: **Insulated Low-E Advanced Low-E Insulating Glass Argon Non High Altitude**
Hardware Options: **Cam-Action Lock, 1 Lock, Champagne, No Limited Opening Hardware, Order Sash Lift, 1 Lift, No Integrated Sensor**
Screen: **Full Screen, White, InView™**
Performance Information: **U-Factor 0.30, SHGC 0.30, VLT 0.56, CPD PEL-N-35-00426-00001, Performance Class LC, PG 40, Calculated Positive DP Rating 40, Calculated Negative DP Rating 40, STC 27, OITC 23, Clear Opening Width 27.312, Clear Opening Height 23.125, Clear Opening Area 4.386042, Egress Does not meet typical United States egress, but may comply with local code requirements**
Grille: **No Grille,**

RIPFT001 - 01 Pocket Fit 0 - 101 UI Qty 1

Line #	Location:	Attributes
90	Office	

Viewed From Exterior

Lifestyle, Double Hung, Without HGP, White

Item Price	Qty	Ext'd Price
$2,127.39	1	$2,127.39

PK # 2169

1: SizeNon-Standard Size Double Hung, Equal
General Information: No Package, Without Hinged Glass Panel, Clad, Pine, 5", 3 11/16", Jambliner Color: **Gray**
Exterior Color / Finish: **Standard Enduraclad, White**
Interior Color / Finish: **Prefinished White Paint Interior**
Glass: **Insulated Low-E Advanced Low-E Insulating Glass Argon Non High Altitude**
Hardware Options: **Cam-Action Lock, 1 Lock, Champagne, No Limited Opening Hardware, Order Sash Lift, 1 Lift, No Integrated Sensor**
Screen: **Full Screen, White, InView™**
Performance Information: **U-Factor 0.30, SHGC 0.30, VLT 0.56, CPD PEL-N-35-00426-00001, Performance Class LC, PG 50, Calculated Positive DP Rating 50, Calculated Negative DP Rating 50, STC 27, OITC 23, Clear Opening Width 24.812, Clear Opening Height 23.125, Clear Opening Area 3.984566, Egress Does not meet typical United States egress, but may comply with local code requirements**
Grille: **No Grille,**

RIPFT001 - 01 Pocket Fit 0 - 101 UI Qty 1

Line #	Location:	Attributes
95	Office	

Viewed From Exterior

Lifestyle, Direct Set, Fixed Frame, Without HGP, White

Item Price	Qty	Ext'd Price
$1,748.92	1	$1,748.92

PK # 2169

1: SizeNon-Standard Size Fixed Frame Direct Set
General Information: No Package, Without Hinged Glass Panel, Interior Glazed, Standard, Clad, Pine, 5", 3 11/16"
Exterior Color / Finish: Standard Enduraclad, White
Interior Color / Finish: Prefinished White Paint Interior
Glass: Insulated Dual Low-E Advanced Low-E Insulating Glass Argon Non High Altitude
Performance Information: U-Factor 0.28, SHGC 0.32, VLT 0.62, CPD PEL-N-18-04208-00001, Performance Class AW, PG 90, Calculated Positive DP Rating 90, Calculated Negative DP Rating 90, STC 27, OITC 22
Grille: No Grille,

RIPFT001 - 01 Pocket Fit 0 - 101 UI Qty 1

Line #	Location:	Attributes
100	Master	

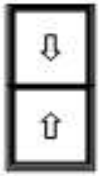

Viewed From Exterior

Lifestyle, Double Hung, Without HGP, White

Item Price	Qty	Ext'd Price
$2,232.76	2	$4,465.52

PK #
2169

1: SizeNon-Standard Size Double Hung, Equal
General Information: No Package, Without Hinged Glass Panel, Clad, Pine, 5", 3 11/16", Jambliner Color: **Gray**
Exterior Color / Finish: **Standard Enduraclad, White**
Interior Color / Finish: **Prefinished White Paint Interior**
Glass: **Insulated Low-E Advanced Low-E Insulating Glass Argon Non High Altitude**
Hardware Options: **Cam-Action Lock, 1 Lock, Champagne, No Limited Opening Hardware, Order Sash Lift, 1 Lift, No Integrated Sensor**
Screen: **Full Screen, White, InView™**
Performance Information: **U-Factor 0.30, SHGC 0.30, VLT 0.56, CPD PEL-N-35-00426-00001, Performance Class LC, PG 35, Calculated Positive DP Rating 35, Calculated Negative DP Rating 35, STC 27, OITC 23, Clear Opening Width 26.562, Clear Opening Height 27.75, Clear Opening Area 5.118719, Egress Meets Typical for ground floor 5.0 sqft (E1) (United States Only)**
Grille: **No Grille,**

RIPFT001 - 01 Pocket Fit 0 - 101 UI Qty 1

Line #	Location:	Attributes
105	Master Bath	

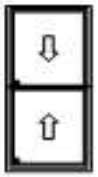

Viewed From Exterior

Lifestyle, Double Hung, Without HGP, White

Item Price	Qty	Ext'd Price
$2,564.10	1	$2,564.10

PK #
2169

1: SizeNon-Standard Size Double Hung, Equal
General Information: No Package, Without Hinged Glass Panel, Clad, Pine, 5", 3 11/16", Jambliner Color: **Gray**
Exterior Color / Finish: **Standard Enduraclad, White**
Interior Color / Finish: **Prefinished White Paint Interior**
Glass: **Insulated Tempered Low-E Advanced Low-E Insulating Glass Argon Non High Altitude**
Hardware Options: **Cam-Action Lock, 1 Lock, Champagne, No Limited Opening Hardware, Order Sash Lift, 1 Lift, No Integrated Sensor**
Screen: **Full Screen, White, InView™**
Performance Information: **U-Factor 0.30, SHGC 0.30, VLT 0.56, CPD PEL-N-35-00427-00001, Performance Class LC, PG 40, Calculated Positive DP Rating 40, Calculated Negative DP Rating 40, STC 27, OITC 23, Clear Opening Width 25.812, Clear Opening Height 27.75, Clear Opening Area 4.974187, Egress Does not meet typical United States egress, but may comply with local code requirements**
Grille: **No Grille,**

RIPFT001 - 01 Pocket Fit 0 - 101 UI Qty 1

Line #	Location:	Attributes	Item Price	Qty	Ext'd Price
110	Wrap Window	**Wrap Window**	$234.50	13	$3,048.50

RIIA012 - Window Cladding - per unit Qty 1

Thank You For Your Interest In Pella® Products

PELLA WARRANTY:

Pella products are covered by Pella's limited warranties in effect at the time of sale. All applicable product warranties are incorporated into and become a part of this contract. Please see the warranties for complete details, taking special note of the two important notice sections regarding installation of Pella products and proper management of moisture within the wall system. Neither Pella Corporation nor the Seller will be bound by any other warranty unless specifically set out in this contract. However, Pella Corporation will not be liable for branch warranties which create obligations in addition to or obligations which are inconsistent with Pella written warranties.

Clear opening (egress) information does not take into consideration the addition of a Rolscreen [or any other accessory] to the product. You should consult your local building code to ensure your Pella products meet local egress requirements.

Per the manufacturer's limited warranty, unfinished mahogany exterior windows and doors must be finished upon receipt prior to installing and refinished annually, thereafter. Variations in wood grain, color, texture or natural characteristics are not covered under the limited warranty.

INSYNCTIVE PRODUCTS: In addition, Pella Insynctive Products are covered by the Pella Insynctive Products Software License Agreement and Pella Insynctive Products Privacy Policy in effect at the time of sale, which can be found at Insynctive.pella.com. By installing or using Your Insynctive Products you are acknowledging the Insynctive Software Agreement and Privacy Policy are part of the terms of sale.

Notice of Collection of Personal Information: We may collect your personal information when you interact with us. Under the California Consumer Privacy Act (CCPA), California residents have specific rights to request this information, request to delete this information, and opt out of the sharing or sale of this information to third parties. To learn more about our collection practices and your rights under the CCPA please visit our link https://www.pella.com/california-rights-policy/ at pella.com.

ARBITRATION AND CLASS ACTION WAIVER ("ARBITRATION AGREEMENT")

YOU and Pella and its subsidiaries and the Pella Branded Distributor **AGREE TO ARBITRATE DISPUTES ARISING OUT OF OR RELATING TO YOUR PELLA PRODUCTS (INCLUDES PELLA GOODS AND PELLA SERVICES) AND WAIVE THE RIGHT TO HAVE A COURT OR JURY DECIDE DISPUTES. YOU WAIVE ALL RIGHTS TO PROCEED AS A MEMBER OR REPRESENTATIVE OF A CLASS ACTION, INCLUDING CLASS ARBITRATION, REGARDING DISPUTES ARISING OUT OF OR RELATING TO YOUR PELLA PRODUCTS.** You may opt out of this Arbitration Agreement by providing notice to Pella no later than ninety (90) calendar days from the date You purchased or otherwise took ownership of Your Pella Goods. To opt out, You must send notice by e-mail to pellawebsupport@pella.com , with the subject line: "Arbitration Opt Out" or by calling (877) 473-5527. Opting out of the Arbitration Agreement will not affect the coverage provided by any applicable limited warranty pertaining to Your Pella Products. For complete information, including the full terms and conditions of this Arbitration Agreement, which are incorporated herein by reference, please visit www.pella.com/arbitration or e-mail to pellawebsupport@pella.com, with the subject line: "Arbitration Details" or call (877) 473-5527. D'ARBITRAGE ET RENONCIATION AU RECOURS COLLECTIF ("convention d'arbitrage") EN FRANÇAIS SEE PELLA.COM/ARBITRATION. DE ARBITRAJE Y RENUNCIA COLECTIVA ("acuerdo de arbitraje") EN ESPAÑOL VER PELLA.COM/ARBITRATION.

Seller shall not be held liable for failure or delay in the performance of its obligations under this Agreement, if such performance is hindered or delayed by the occurrence of an act or event beyond the Seller's reasonable control (force majeure event), including but not limited to earthquakes, unusually severe weather and other Acts of God, fire, strikes and labor unrest, epidemics, riots, war, civil unrest, and government interventions. Seller shall give timely notice of a force majeure event and take such reasonable action to mitigate the impacts of such an event.

Product Performance Information:

U-Factor, Solar Heat Gain Coefficient (SHGC), and Visible Light Transmittance (VLT) are certified by the National Fenestration Rating Council (NFRC).

Manufacturer stipulates that these ratings conform to applicable NFRC procedures for determining whole product performance. NFRC ratings are determined for a fixed set of environmental conditions and a specific product size. NFRC does not recommend any products and does not warrant the suitability of any product for any specific use.

Design Pressure (DP), Performance Class, and Performance Grade (PG) are certified by a third party organization, in many cases the Window and Door Manufacturers Association (WDMA). The certification requires the performance of at least one product of the product line to be tested in accordance with the applicable performance standards and verified by an independent party. The certification indicates that the product(s) of the product line passed the applicable tests. The certification does not apply to mulled and/or product combinations unless noted. Actual product results will vary and change over the products life.

For more performance information along with information on Florida Product Approval System (FPAS) Number and Texas Dept. of Insurance (TDI) number go to www.pella.com/performance.

Including during the construction period, casement windows should never be left open and unlocked for prolong periods or during high wind conditions to avoid sash detachment/damage.

Actual sizes tested for documented STC and OITC ratings may vary from the ASTM E 1425 sizes to better represent Pella product offering.

STC and OITC ratings shown may be conservatively based on products tested with thinner panes of glass.

STC and OITC ratings may be from test results from an equivalent product.

BRANCH WARRANTY:

ELECTRONIC SIGNATURE AGREEMENT: Customer agrees that its electronic signature of this Arbitration Agreement is the legal equivalent of a manual/handwritten signature on this Arbitration Agreement. By electronically signing this Arbitration Agreement using any device, means or action, Customer consents to the legally binding terms and conditions of this Arbitration Agreement. Customer further agrees that its signature on this Arbitration Agreement (hereafter referred to as Customer's "E-Signature") is as valid as if Customer signed this Arbitration Agreement in writing. Customer also agrees that no certification authority or other third party verification is necessary to validate its E-Signature, and that the lack of such certification or third party verification will not in any way affect the enforceability of Customer's E-Signature or any resulting agreement between Customer and Pella of Wisconsin. Customer is also confirming that it is an authorized agent of Customer and has been authorized to enter into this Arbitration Agreement.

CONSENT TO ELECTRONIC DELIVERY: By electronically signing this Arbitration Agreement, Customer specifically agrees to receive, obtain, and/or submit any and all documents and information relating to this Arbitration Agreement electronically. These documents and information will be collectively known as "Electronic Communications," and will include, but not be limited to, any and all current and future required notices and/or disclosures, as well as such documents, statements, data, records and other communications regarding the Services and/or Customer's account with Pella of Wisconsin. Customer acknowledges that it is able to retain Electronic Communications by printing and/or downloading and saving this Arbitration Agreement and any other agreements, Electronic Communications, documents, or records that are signed using Customer's E-Signature. Customer accepts Electronic Communications provided via email as reasonable and proper notice for the purpose of fulfilling any and all rules and regulations, and Customer agrees that such Electronic Communications fully satisfy any requirement that communications be provided to Customer in writing or in a form that Customer may keep.

Date:_____

Customer Printed Name: _____

Customer Signature:_____

TERMS & CONDITIONS:

Call your Sales Representative to contract this proposal

Note: These totals DO NOT include tax

Order Totals	
Taxable Subtotal	$40,216.66
Sales Tax @ 0%	$0.00
Non-taxable Subtotal	$16,751.00
Total	$56,967.66
Deposit Received	$0.00
Amount Due	**$56,967.66**

Proposal - Detailed

Pella Window and Door Showroom of Green Bay
500 Pilgrim Way
Green Bay, WI 54304
Phone: (920) 435-3791 **Fax:** (920) 435-0377

Sales Rep Name: Pamperin, Ryan
Sales Rep Phone: 920-634-8432
Sales Rep E-Mail: rpamperin@pellawi.com
Sales Rep Fax:

Customer Information	Project/Delivery Address	Order Information
Bryan Lipke 806 S Quincy St GREEN BAY, WI 54301-3629 **Primary Phone:** (920) 471-7023 **Mobile Phone:** **Fax Number:** **E-Mail:** blipke@new.rr.com **Contact Name:** **Great Plains #:** 1002271123 **Customer Number:** 1006834549 **Customer Account:** 1002271123	**Bryan Lipke - VINYL QUOTE** **Lot #** , **County:** **Owner Name:** Bryan Lipke **Owner Phone:** (920) 471-7023	**Quote Name:** Bryan Lipke - VINYL QUOTE **Order Number:** 780 **Quote Number:** **18381461** **Order Type:** Installed Sales **Wall Depth:** **Payment Terms:** Dep/Pd on Installation **Tax Code:** **Cust Delivery Date:** None **Quoted Date:** 7/3/2024 **Contracted Date:** **Booked Date:** **Customer PO #:**

Line #	Location:	Attributes
10	Lower Stairwell	

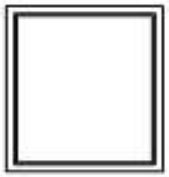

Viewed From Exterior

PK #
2169

Pella 250 Series, Direct Set, Fixed Frame, White

Item Price	Qty	Ext'd Price
$1,250.12	1	$1,250.12

1: SizeNon-Standard Size Fixed Frame Direct Set
General Information: Standard, Vinyl, Block, Foam Insulated, 3 1/4", 3 1/4", Sill Adapter Included, Head Expander Included
Exterior Color / Finish: White
Interior Color / Finish: White
Glass: Insulated Dual Low-E Advanced Low-E Insulating Glass Argon Non High Altitude
Performance Information: U-Factor 0.26, SHGC 0.32, VLT 0.60, CPD PEL-N-209-00246-00001, Performance Class CW, PG 50, Calculated Positive DP Rating 50, Calculated Negative DP Rating 50
Grille: No Grille,

RIPFT001 - 01 Pocket Fit 0 - 101 UI Qty 1

Line #	Location:	Attributes
15	Upper Stairwell	

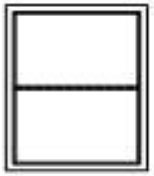

Viewed From Exterior

Pella 250 Series, Direct Set, Fixed Frame, White

Item Price	Qty	Ext'd Price
$1,363.30	1	$1,363.30

PK # 2169

1: SizeNon-Standard Size Fixed Frame Direct Set
General Information: Standard, Vinyl, Block, Foam Insulated, 3 1/4", 3 1/4", Sill Adapter Included, Head Expander Included
Exterior Color / Finish: White
Interior Color / Finish: White
Glass: Insulated Dual Low-E Advanced Low-E Insulating Glass Argon Non High Altitude
Performance Information: U-Factor 0.26, SHGC 0.29, VLT 0.54, CPD PEL-N-209-00246-00002, Performance Class CW, PG 50, Calculated Positive DP Rating 50, Calculated Negative DP Rating 50
Grille: GBG, No Custom Grille, 3/4" Contour, Traditional (1W2H), White, White

RIPFT001 - 01 Pocket Fit 0 - 101 UI Qty 1

Line #	Location:	Attributes
20	Living Room	

Viewed From Exterior

Pella 250 Series, Double Hung, White

Item Price	Qty	Ext'd Price
$1,673.33	2	$3,346.66

PK # 2169

1: SizeNon-Standard Size Double Hung, Equal
General Information: Standard, Vinyl, Block, Foam Insulated, 3 1/4", 3 1/4", Sill Adapter Included, Head Expander Included
Exterior Color / Finish: White
Interior Color / Finish: White
Glass: Insulated Dual Low-E Advanced Low-E Insulating Glass Argon Non High Altitude
Hardware Options: Cam-Action Lock, White, Standard Vent Stop, No Limited Opening Hardware
Screen: Full Screen, InView™
Performance Information: U-Factor 0.29, SHGC 0.28, VLT 0.53, CPD PEL-N-211-00230-00001, Performance Class R, PG 30, Calculated Positive DP Rating 30, Calculated Negative DP Rating 30, STC 26, OITC 22, Clear Opening Width 18.454, Clear Opening Height 29.464, Clear Opening Area 3.775894, Egress Does not meet typical United States egress, but may comply with local code requirements
Grille: No Grille,

RIPFT001 - 01 Pocket Fit 0 - 101 UI Qty 1

Line #	Location:	Attributes
25	Living Room	

Viewed From Exterior

PK #
2169

Pella 250 Series, Direct Set, Fixed Frame, White

Item Price	Qty	Ext'd Price
$2,453.28	1	$2,453.28

1: SizeNon-Standard Size Fixed Frame Direct Set
General Information: Standard, Vinyl, Block, Foam Insulated, 3 1/4", 3 1/4", Sill Adapter Included, Head Expander Included
Exterior Color / Finish: White
Interior Color / Finish: White
Glass: Insulated Dual Low-E Advanced Low-E Insulating Glass Argon Non High Altitude
Performance Information: U-Factor 0.26, SHGC 0.31, VLT 0.58, CPD PEL-N-209-00309-00001
Grille: No Grille,

RIPFT003 - 03 Pocket Fit131 - 150 UI Qty 1

Line #	Location:	Attributes
30	Living Room	

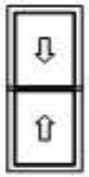

Viewed From Exterior

PK #
2169

Pella 250 Series, Double Hung, White

Item Price	Qty	Ext'd Price
$1,711.14	1	$1,711.14

1: SizeNon-Standard Size Double Hung, Equal
General Information: Standard, Vinyl, Block, Foam Insulated, 3 1/4", 3 1/4", Sill Adapter Included, Head Expander Included
Exterior Color / Finish: White
Interior Color / Finish: White
Glass: Insulated Dual Low-E Advanced Low-E Insulating Glass Argon Non High Altitude
Hardware Options: Cam-Action Lock, White, Standard Vent Stop, No Limited Opening Hardware
Screen: Full Screen, InView™
Performance Information: U-Factor 0.29, SHGC 0.28, VLT 0.53, CPD PEL-N-211-00230-00001, Performance Class R, PG 30, Calculated Positive DP Rating 30, Calculated Negative DP Rating 30, STC 26, OITC 22, Clear Opening Width 23.454, Clear Opening Height 29.464, Clear Opening Area 4.798949, Egress Does not meet typical United States egress, but may comply with local code requirements
Grille: No Grille,

RIPFT001 - 01 Pocket Fit 0 - 101 UI Qty 1

Line #	Location:	Attributes
35	Dining Room	

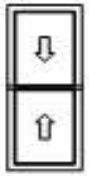

Viewed From Exterior

Pella 250 Series, Double Hung, White

Item Price	Qty	Ext'd Price
$1,711.14	2	$3,422.28

PK # 2169

1: SizeNon-Standard Size Double Hung, Equal
General Information: Standard, Vinyl, Block, Foam Insulated, 3 1/4", 3 1/4", Sill Adapter Included, Head Expander Included
Exterior Color / Finish: White
Interior Color / Finish: White
Glass: Insulated Dual Low-E Advanced Low-E Insulating Glass Argon Non High Altitude
Hardware Options: Cam-Action Lock, White, Standard Vent Stop, No Limited Opening Hardware
Screen: Full Screen, InView™
Performance Information: U-Factor 0.29, SHGC 0.28, VLT 0.53, CPD PEL-N-211-00230-00001, Performance Class R, PG 30, Calculated Positive DP Rating 30, Calculated Negative DP Rating 30, STC 26, OITC 22, Clear Opening Width 23.454, Clear Opening Height 29.464, Clear Opening Area 4.798949, Egress Does not meet typical United States egress, but may comply with local code requirements
Grille: No Grille,

RIPFT001 - 01 Pocket Fit 0 - 101 UI Qty 1

Line #	Location:	Attributes
40	Dining Room	

Viewed From Exterior

Pella 250 Series, Direct Set, Fixed Frame, White

Item Price	Qty	Ext'd Price
$1,778.88	1	$1,778.88

PK # 2169

1: SizeNon-Standard Size Fixed Frame Direct Set
General Information: Standard, Vinyl, Block, Foam Insulated, 3 1/4", 3 1/4", Sill Adapter Included, Head Expander Included
Exterior Color / Finish: White
Interior Color / Finish: White
Glass: Insulated Dual Low-E Advanced Low-E Insulating Glass Argon Non High Altitude
Performance Information: U-Factor 0.26, SHGC 0.31, VLT 0.59, CPD PEL-N-209-00246-00003, Performance Class CW, PG 30, Calculated Positive DP Rating 30, Calculated Negative DP Rating 30, STC 26, OITC 22
Grille: No Grille,

RIPFT003 - 03 Pocket Fit131 - 150 UI Qty 1

Line #	Location:	Attributes
45	Kitchen Sink	

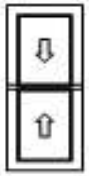

Viewed From Exterior

Pella 250 Series, Double Hung, White

Item Price	Qty	Ext'd Price
$1,446.32	1	$1,446.32

PK # 2169

1: SizeNon-Standard Size Double Hung, Equal
General Information: Standard, Vinyl, Block, Foam Insulated, 3 1/4", 3 1/4", Sill Adapter Included, Head Expander Included
Exterior Color / Finish: White
Interior Color / Finish: White
Glass: Insulated Dual Low-E Advanced Low-E Insulating Glass Argon Non High Altitude
Hardware Options: Cam-Action Lock, White, Standard Vent Stop, No Limited Opening Hardware
Screen: Full Screen, InView™
Performance Information: U-Factor 0.28, SHGC 0.28, VLT 0.53, CPD PEL-N-211-00205-00001, Performance Class R, PG 35, Calculated Positive DP Rating 35, Calculated Negative DP Rating 35, STC 26, OITC 22, Clear Opening Width 13.954, Clear Opening Height 17.464, Clear Opening Area 1.69231, Egress Does not meet typical United States egress, but may comply with local code requirements
Grille: No Grille,

RIPFT001 - 01 Pocket Fit 0 - 101 UI Qty 1

Line #	Location:	Attributes
50	Kitchen Sink	

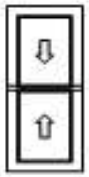

Viewed From Exterior

Pella 250 Series, Double Hung, White

Item Price	Qty	Ext'd Price
$1,446.32	1	$1,446.32

PK # 2169

1: SizeNon-Standard Size Double Hung, Equal
General Information: Standard, Vinyl, Block, Foam Insulated, 3 1/4", 3 1/4", Sill Adapter Included, Head Expander Included
Exterior Color / Finish: White
Interior Color / Finish: White
Glass: Insulated Dual Low-E Advanced Low-E Insulating Glass Argon Non High Altitude
Hardware Options: Cam-Action Lock, White, Standard Vent Stop, No Limited Opening Hardware
Screen: Full Screen, InView™
Performance Information: U-Factor 0.28, SHGC 0.28, VLT 0.53, CPD PEL-N-211-00205-00001, Performance Class R, PG 35, Calculated Positive DP Rating 35, Calculated Negative DP Rating 35, STC 26, OITC 22, Clear Opening Width 13.954, Clear Opening Height 17.464, Clear Opening Area 1.69231, Egress Does not meet typical United States egress, but may comply with local code requirements
Grille: No Grille,

RIPFT001 - 01 Pocket Fit 0 - 101 UI Qty 1

Line #	Location:	Attributes
60	Mud Room	

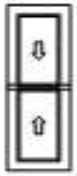

Viewed From Exterior

Pella 250 Series, Double Hung, White

Item Price	Qty	Ext'd Price
$1,431.43	2	$2,862.86

PK # 2169

1: SizeNon-Standard Size Double Hung, Equal
General Information: Standard, Vinyl, Block, Foam Insulated, 3 1/4", 3 1/4", Sill Adapter Included, Head Expander Included
Exterior Color / Finish: White
Interior Color / Finish: White
Glass: Insulated Dual Low-E Advanced Low-E Insulating Glass Argon Non High Altitude
Hardware Options: Cam-Action Lock, White, Standard Vent Stop, No Limited Opening Hardware
Screen: Full Screen, InView™
Performance Information: U-Factor 0.28, SHGC 0.28, VLT 0.53, CPD PEL-N-211-00205-00001, Performance Class R, PG 35, Calculated Positive DP Rating 35, Calculated Negative DP Rating 35, STC 26, OITC 22, Clear Opening Width 10.954, Clear Opening Height 17.714, Clear Opening Area 1.347494, Egress Does not meet typical United States egress, but may comply with local code requirements
Grille: No Grille,

RIPFT001 - 01 Pocket Fit 0 - 101 UI Qty 1

Line #	Location:	Attributes
65	Mud Room	

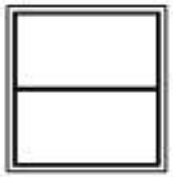

Viewed From Exterior

Pella 250 Series, Direct Set, Fixed Frame, White

Item Price	Qty	Ext'd Price
$1,454.05	1	$1,454.05

PK # 2169

1: SizeNon-Standard Size Fixed Frame Direct Set
General Information: Standard, Vinyl, Block, Foam Insulated, 3 1/4", 3 1/4", Sill Adapter Included, Head Expander Included
Exterior Color / Finish: White
Interior Color / Finish: White
Glass: Insulated Dual Low-E Advanced Low-E Insulating Glass Argon Non High Altitude
Performance Information: U-Factor 0.26, SHGC 0.29, VLT 0.54, CPD PEL-N-209-00246-00002, Performance Class CW, PG 45, Calculated Positive DP Rating 45, Calculated Negative DP Rating 45
Grille: GBG, No Custom Grille, 3/4" Contour, Traditional (1W2H), White, White

RIPFT001 - 01 Pocket Fit 0 - 101 UI Qty 1

Line #	Location:	Attributes
70	Mud Room	

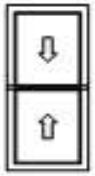

Viewed From Exterior

Pella 250 Series, Double Hung, White

Item Price	Qty	Ext'd Price
$1,643.08	1	$1,643.08

PK # 2169

1: SizeNon-Standard Size Double Hung, Equal
General Information: Standard, Vinyl, Block, Foam Insulated, 3 1/4", 3 1/4", Sill Adapter Included, Head Expander Included
Exterior Color / Finish: White
Interior Color / Finish: White
Glass: Insulated Dual Low-E Advanced Low-E Insulating Glass Argon Non High Altitude
Hardware Options: Cam-Action Lock, White, Standard Vent Stop, No Limited Opening Hardware
Screen: Full Screen, InView™
Performance Information: U-Factor 0.28, SHGC 0.28, VLT 0.53, CPD PEL-N-211-00205-00001, Performance Class R, PG 35, Calculated Positive DP Rating 35, Calculated Negative DP Rating 35, STC 26, OITC 22, Clear Opening Width 22.704, Clear Opening Height 25.464, Clear Opening Area 4.014824, Egress Does not meet typical United States egress, but may comply with local code requirements
Grille: No Grille,

RIPFT001 - 01 Pocket Fit 0 - 101 UI Qty 1

Line #	Location:	Attributes
75	Back Hall	

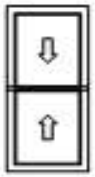

Viewed From Exterior

Pella 250 Series, Double Hung, White

Item Price	Qty	Ext'd Price
$1,643.08	1	$1,643.08

PK # 2169

1: SizeNon-Standard Size Double Hung, Equal
General Information: Standard, Vinyl, Block, Foam Insulated, 3 1/4", 3 1/4", Sill Adapter Included, Head Expander Included
Exterior Color / Finish: White
Interior Color / Finish: White
Glass: Insulated Dual Low-E Advanced Low-E Insulating Glass Argon Non High Altitude
Hardware Options: Cam-Action Lock, White, Standard Vent Stop, No Limited Opening Hardware
Screen: Full Screen, InView™
Performance Information: U-Factor 0.28, SHGC 0.28, VLT 0.53, CPD PEL-N-211-00205-00001, Performance Class R, PG 35, Calculated Positive DP Rating 35, Calculated Negative DP Rating 35, STC 26, OITC 22, Clear Opening Width 22.704, Clear Opening Height 25.464, Clear Opening Area 4.014824, Egress Does not meet typical United States egress, but may comply with local code requirements
Grille: No Grille,

RIPFT001 - 01 Pocket Fit 0 - 101 UI Qty 1

Line #	Location:	Attributes
80	Above Back Door	

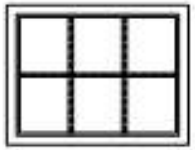

Viewed From Exterior

PK #
2169

Pella 250 Series, Direct Set, Fixed Frame, White

Item Price	Qty	Ext'd Price
$1,227.16	1	$1,227.16

1: SizeNon-Standard Size Fixed Frame Direct Set
General Information: Standard, Vinyl, Block, Foam Insulated, 3 1/4", 3 1/4", Sill Adapter Included, Head Expander Included
Exterior Color / Finish: White
Interior Color / Finish: White
Glass: Insulated Dual Low-E Advanced Low-E Insulating Glass Argon Non High Altitude
Performance Information: U-Factor 0.26, SHGC 0.29, VLT 0.54, CPD PEL-N-209-00246-00002, Performance Class CW, PG 50, Calculated Positive DP Rating 50, Calculated Negative DP Rating 50
Grille: GBG, No Custom Grille, 3/4" Contour, Traditional (3W2H), White, White

RIPFT001 - 01 Pocket Fit 0 - 101 UI Qty 1

Line #	Location:	Attributes
85	Office	

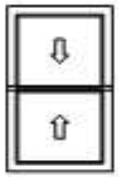

Viewed From Exterior

PK #
2169

Pella 250 Series, Double Hung, White

Item Price	Qty	Ext'd Price
$1,597.70	1	$1,597.70

1: SizeNon-Standard Size Double Hung, Equal
General Information: Standard, Vinyl, Block, Foam Insulated, 3 1/4", 3 1/4", Sill Adapter Included, Head Expander Included
Exterior Color / Finish: White
Interior Color / Finish: White
Glass: Insulated Dual Low-E Advanced Low-E Insulating Glass Argon Non High Altitude
Hardware Options: Cam-Action Lock, White, Standard Vent Stop, No Limited Opening Hardware
Screen: Full Screen, InView™
Performance Information: U-Factor 0.28, SHGC 0.28, VLT 0.53, CPD PEL-N-211-00205-00001, Performance Class R, PG 35, Calculated Positive DP Rating 35, Calculated Negative DP Rating 35, STC 26, OITC 22, Clear Opening Width 25.454, Clear Opening Height 20.964, Clear Opening Area 3.705678, Egress Does not meet typical United States egress, but may comply with local code requirements
Grille: No Grille,

RIPFT001 - 01 Pocket Fit 0 - 101 UI Qty 1

Line #	Location:	Attributes
90	Office	

Viewed From Exterior

Pella 250 Series, Double Hung, White

Item Price	Qty	Ext'd Price
$1,575.01	1	$1,575.01

PK # 2169

1: SizeNon-Standard Size Double Hung, Equal
General Information: Standard, Vinyl, Block, Foam Insulated, 3 1/4", 3 1/4", Sill Adapter Included, Head Expander Included
Exterior Color / Finish: White
Interior Color / Finish: White
Glass: Insulated Dual Low-E Advanced Low-E Insulating Glass Argon Non High Altitude
Hardware Options: Cam-Action Lock, White, Standard Vent Stop, No Limited Opening Hardware
Screen: Full Screen, InView™
Performance Information: U-Factor 0.28, SHGC 0.28, VLT 0.53, CPD PEL-N-211-00205-00001, Performance Class R, PG 35, Calculated Positive DP Rating 35, Calculated Negative DP Rating 35, STC 26, OITC 22, Clear Opening Width 22.954, Clear Opening Height 20.964, Clear Opening Area 3.34172, Egress Does not meet typical United States egress, but may comply with local code requirements
Grille: No Grille,

RIPFT001 - 01 Pocket Fit 0 - 101 UI Qty 1

Line #	Location:	Attributes
95	Office	

Viewed From Exterior

Pella 250 Series, Direct Set, Fixed Frame, White

Item Price	Qty	Ext'd Price
$1,166.93	1	$1,166.93

PK # 2169

1: SizeNon-Standard Size Fixed Frame Direct Set
General Information: Standard, Vinyl, Block, Foam Insulated, 3 1/4", 3 1/4", Sill Adapter Included, Head Expander Included
Exterior Color / Finish: White
Interior Color / Finish: White
Glass: Insulated Dual Low-E Advanced Low-E Insulating Glass Argon Non High Altitude
Performance Information: U-Factor 0.26, SHGC 0.32, VLT 0.60, CPD PEL-N-209-00246-00001, Performance Class CW, PG 50, Calculated Positive DP Rating 50, Calculated Negative DP Rating 50
Grille: No Grille,

RIPFT001 - 01 Pocket Fit 0 - 101 UI Qty 1

Line #	Location:	Attributes
100	Master	

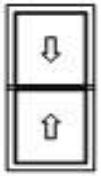

Viewed From Exterior

Pella 250 Series, Double Hung, White

Item Price	Qty	Ext'd Price
$1,658.20	2	$3,316.40

PK # 2169

1: SizeNon-Standard Size Double Hung, Equal
General Information: Standard, Vinyl, Block, Foam Insulated, 3 1/4", 3 1/4", Sill Adapter Included, Head Expander Included
Exterior Color / Finish: White
Interior Color / Finish: White
Glass: Insulated Dual Low-E Advanced Low-E Insulating Glass Argon Non High Altitude
Hardware Options: Cam-Action Lock, White, Standard Vent Stop, No Limited Opening Hardware
Screen: Full Screen, InView™
Performance Information: U-Factor 0.28, SHGC 0.28, VLT 0.53, CPD PEL-N-211-00205-00001, Performance Class R, PG 35, Calculated Positive DP Rating 35, Calculated Negative DP Rating 35, STC 26, OITC 22, Clear Opening Width 24.704, Clear Opening Height 25.589, Clear Opening Area 4.389935, Egress Does not meet typical United States egress, but may comply with local code requirements
Grille: No Grille,

RIPFT001 - 01 Pocket Fit 0 - 101 UI Qty 1

Line #	Location:	Attributes
105	Master Bath	

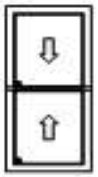

Viewed From Exterior

Pella 250 Series, Double Hung, White

Item Price	Qty	Ext'd Price
$1,942.06	1	$1,942.06

PK # 2169

1: SizeNon-Standard Size Double Hung, Equal
General Information: Standard, Vinyl, Block, Foam Insulated, 3 1/4", 3 1/4", Sill Adapter Included, Head Expander Included
Exterior Color / Finish: White
Interior Color / Finish: White
Glass: Insulated Dual Tempered Low-E Advanced Low-E Insulating Glass Argon Non High Altitude
Hardware Options: Cam-Action Lock, White, Standard Vent Stop, No Limited Opening Hardware
Screen: Full Screen, InView™
Performance Information: U-Factor 0.28, SHGC 0.28, VLT 0.53, CPD PEL-N-211-00205-00003, Performance Class R, PG 35, Calculated Positive DP Rating 35, Calculated Negative DP Rating 35, STC 26, OITC 22, Clear Opening Width 23.954, Clear Opening Height 25.589, Clear Opening Area 4.25666, Egress Does not meet typical United States egress, but may comply with local code requirements
Grille: No Grille,

RIPFT001 - 01 Pocket Fit 0 - 101 UI Qty 1

Line #	Location:	Attributes	Item Price	Qty	Ext'd Price
110	Wrap Window	**Wrap Window**	$234.50	13	$3,048.50

RIIA012 - Window Cladding - per unit Qty 1

Thank You For Your Interest In Pella® Products

PELLA WARRANTY:

Pella products are covered by Pella's limited warranties in effect at the time of sale. All applicable product warranties are incorporated into and become a part of this contract. Please see the warranties for complete details, taking special note of the two important notice sections regarding installation of Pella products and proper management of moisture within the wall system. Neither Pella Corporation nor the Seller will be bound by any other warranty unless specifically set out in this contract. However, Pella Corporation will not be liable for branch warranties which create obligations in addition to or obligations which are inconsistent with Pella written warranties.

Clear opening (egress) information does not take into consideration the addition of a Rolscreen [or any other accessory] to the product. You should consult your local building code to ensure your Pella products meet local egress requirements.

Per the manufacturer's limited warranty, unfinished mahogany exterior windows and doors must be finished upon receipt prior to installing and refinished annually, thereafter. Variations in wood grain, color, texture or natural characteristics are not covered under the limited warranty.

INSYNCTIVE PRODUCTS: In addition, Pella Insynctive Products are covered by the Pella Insynctive Products Software License Agreement and Pella Insynctive Products Privacy Policy in effect at the time of sale, which can be found at Insynctive.pella.com. By installing or using Your Insynctive Products you are acknowledging the Insynctive Software Agreement and Privacy Policy are part of the terms of sale.

Notice of Collection of Personal Information: We may collect your personal information when you interact with us. Under the California Consumer Privacy Act (CCPA), California residents have specific rights to request this information, request to delete this information, and opt out of the sharing or sale of this information to third parties. To learn more about our collection practices and your rights under the CCPA please visit our link https://www.pella.com/california-rights-policy/ at pella.com.

ARBITRATION AND CLASS ACTION WAIVER ("ARBITRATION AGREEMENT")

YOU and Pella and its subsidiaries and the Pella Branded Distributor **AGREE TO ARBITRATE DISPUTES ARISING OUT OF OR RELATING TO YOUR PELLA PRODUCTS (INCLUDES PELLA GOODS AND PELLA SERVICES) AND WAIVE THE RIGHT TO HAVE A COURT OR JURY DECIDE DISPUTES. YOU WAIVE ALL RIGHTS TO PROCEED AS A MEMBER OR REPRESENTATIVE OF A CLASS ACTION, INCLUDING CLASS ARBITRATION, REGARDING DISPUTES ARISING OUT OF OR RELATING TO YOUR PELLA PRODUCTS.** You may opt out of this Arbitration Agreement by providing notice to Pella no later than ninety (90) calendar days from the date You purchased or otherwise took ownership of Your Pella Goods. To opt out, You must send notice by e-mail to pellawebsupport@pella.com , with the subject line: "Arbitration Opt Out" or by calling (877) 473-5527. Opting out of the Arbitration Agreement will not affect the coverage provided by any applicable limited warranty pertaining to Your Pella Products. For complete information, including the full terms and conditions of this Arbitration Agreement, which are incorporated herein by reference, please visit www.pella.com/arbitration or e-mail to pellawebsupport@pella.com, with the subject line: "Arbitration Details" or call (877) 473-5527. D'ARBITRAGE ET RENONCIATION AU RECOURS COLLECTIF ("convention d'arbitrage") EN FRANÇAIS SEE PELLA.COM/ARBITRATION. DE ARBITRAJE Y RENUNCIA COLECTIVA ("acuerdo de arbitraje") EN ESPAÑOL VER PELLA.COM/ARBITRATION.

Seller shall not be held liable for failure or delay in the performance of its obligations under this Agreement, if such performance is hindered or delayed by the occurrence of an act or event beyond the Seller's reasonable control (force majeure event), including but not limited to earthquakes, unusually severe weather and other Acts of God, fire, strikes and labor unrest, epidemics, riots, war, civil unrest, and government interventions. Seller shall give timely notice of a force majeure event and take such reasonable action to mitigate the impacts of such an event.

Product Performance Information:

U-Factor, Solar Heat Gain Coefficient (SHGC), and Visible Light Transmittance (VLT) are certified by the National Fenestration Rating Council (NFRC).

Manufacturer stipulates that these ratings conform to applicable NFRC procedures for determining whole product performance. NFRC ratings are determined for a fixed set of environmental conditions and a specific product size. NFRC does not recommend any products and does not warrant the suitability of any product for any specific use.

Design Pressure (DP), Performance Class, and Performance Grade (PG) are certified by a third party organization, in many cases the Window and Door Manufacturers Association (WDMA). The certification requires the performance of at least one product of the product line to be tested in accordance with the applicable performance standards and verified by an independent party. The certification indicates that the product(s) of the product line passed the applicable tests. The certification does not apply to mulled and/or product combinations unless noted. Actual product results will vary and change over the products life.

For more performance information along with information on Florida Product Approval System (FPAS) Number and Texas Dept. of Insurance (TDI) number go to www.pella.com/performance.

Including during the construction period, casement windows should never be left open and unlocked for prolong periods or during high wind conditions to avoid sash detachment/damage.

Actual sizes tested for documented STC and OITC ratings may vary from the ASTM E 1425 sizes to better represent Pella product offering.

STC and OITC ratings shown may be conservatively based on products tested with thinner panes of glass.

STC and OITC ratings may be from test results from an equivalent product.

BRANCH WARRANTY:

ELECTRONIC SIGNATURE AGREEMENT: Customer agrees that its electronic signature of this Arbitration Agreement is the legal equivalent of a manual/handwritten signature on this Arbitration Agreement. By electronically signing this Arbitration Agreement using any device, means or action, Customer consents to the legally binding terms and conditions of this Arbitration Agreement. Customer further agrees that its signature on this Arbitration Agreement (hereafter referred to as Customer's "E-Signature") is as valid as if Customer signed this Arbitration Agreement in writing. Customer also agrees that no certification authority or other third party verification is necessary to validate its E-Signature, and that the lack of such certification or third party verification will not in any way affect the enforceability of Customer's E-Signature or any resulting agreement between Customer and Pella of Wisconsin. Customer is also confirming that it is an authorized agent of Customer and has been authorized to enter into this Arbitration Agreement.

CONSENT TO ELECTRONIC DELIVERY: By electronically signing this Arbitration Agreement, Customer specifically agrees to receive, obtain, and/or submit any and all documents and information relating to this Arbitration Agreement electronically. These documents and information will be collectively known as "Electronic Communications," and will include, but not be limited to, any and all current and future required notices and/or disclosures, as well as such documents, statements, data, records and other communications regarding the Services and/or Customer's account with Pella of Wisconsin. Customer acknowledges that it is able to retain Electronic Communications by printing and/or downloading and saving this Arbitration Agreement and any other agreements, Electronic Communications, documents, or records that are signed using Customer's E-Signature. Customer accepts Electronic Communications provided via email as reasonable and proper notice for the purpose of fulfilling any and all rules and regulations, and Customer agrees that such Electronic Communications fully satisfy any requirement that communications be provided to Customer in writing or in a form that Customer may keep.

Date:_____

Customer Printed Name: _____

Customer Signature:_____

TERMS & CONDITIONS:

Call your Sales Representative to contract this proposal

Note: These totals DO NOT include tax

Order Totals	
Taxable Subtotal	$22,944.13
Sales Tax @ 0%	$0.00
Non-taxable Subtotal	$16,751.00
Total	$39,695.13
Deposit Received	$0.00
Amount Due	**$39,695.13**

Address:	806	S Quincy	St			
Parcel No.:	16-126					
WI AHI No.:	53336					
Historic Name:		(John Geniesse, 1896 City Directory)				
Built:	1903	(between 1893 & 1895 per Astor book, w/ City Directory				
Historic Use:	house		listing in 1896)			
Architectural Style:	Queen Anne					
Wall Material:	stone - unspecified					
Architect:						
National Register:	2/27/1980					
State Register:	1/1/1989					
Other:						
NRHP nomination link:						
http://focus.nps.gov/pdfhost/docs/NRHP/Text/80000107.pdf						
(district nomination)						
Notes:						
	"A steeply pitched roofline adds a Queen Anne effect to this two story					
	home. The lower portion of the house is stone, while the upper is					
	stuccoed.					
	Owner: Carolyn Slatky"					
	- per NRHP nomination					
Stewardship:						
Character -	Overall form & some fenestration. Cross gable form with steep rooflines					
	typical of Queen Anne style. This house has been extensively altered					
	in that the siding has been completely covered in stucco (see description					
	of stone above), a larger L-shaped porch removed, and various other					
	elements removed & added. 1/1 windows. 1 story polygonal bay,					
	south façade.					
Features -	Unknown. Historic features appear to have been covered or removed.					
	House further altered after 1979 NRHP nomination.					
Alterations -	yes. While recognizable by form as a Queen Anne, this house lacks nearly					
	all of its historic, style-defining, Queen Anne elements. Fenestration					
	possibly altered (1st story, front façade).					
Misc -						

www.greenbaywi.gov

CERTIFICATE OF APPROPRIATENESS APPLICATION

All fields must be completed before application will be processed.

Department of Community
and Economic Development
100 N. Jefferson Street, Rm 608
Green Bay, WI 54301-5026
(920) 448-3300 - phone
(920) 448-3426 - fax
www.greenbaywi.gov

File Number: _____

1. Address: 806 South Quincy Street
2. Parcel #: 16-126
3. Owner of record: Bryan D. Lipke Phone: 920-471-7023

806 South Quincy Street	Green Bay	WI	54301
(Address)	(City)	(State)	(Zip)

4. Applicant's Name: Bryan Lipke

806 South Quincy Street	Green Bay	WI	54301
(Address)	(City)	(State)	(Zip)
(920)492-5703	(920) 471-7023	greenbayrunner@gmail.com	
(Office Phone #)	(Cell Phone #)	(E-mail Address)	

5. Present use of Property: Main Residence
6. Description of Project: Describe each item of the project separately. Include existing condition(s) when describing item. Also, describe the proposed work, material(s) to be used and the impact the item would have on existing historic or architectural features of the property. (Attach additional sheets if necessary.)

Upstairs was 2004 window updates

Pictures demonstrate that all of the storms and original double hung windows were replaced in 2004 as Pella Wood Windows. Bryan plans to do the 21 remaining windows on the first floor of the property. Replacements will keep the same exterior architectural detail in terms of style (grids) and utility. I do welcome the opportunity to explore vinyl as a cost savings measure.

7. Attachments:
   - ☐ Site Plan of the lot (Please indicate direction of north, dimensions, structures, etc.)
   - ☐ Sketches, drawings, building and streetscape elevations, and/or annotated photos
   - ☑ Exterior photos
   - ☑ Specifications (materials) for the project
   - ☐ Phased development plan for the project (if proposed in phases)
   - ☐ Inspection report (required for demolition requests only)
   - ☑ Cost estimates for all the proposed work
   - ☐ Other (please explain): _____

CERTIFICATE OF APPROPRIATENESS APPLICATION (Continued)

8. The following action is requested:

☑ **Approval of COA by Landmarks Commission** (projects not listed below)

☑ **Approval of COA by staff:** (Check all that apply)

- ☐ Roof repair/replacement
- ☐ Gutter repair/replacement
- ☐ Private sidewalk and driveway repair/replacement of the same dimensions and orientation
- ☐ Chimney repair and tuckpointing according to the Secretary of the interior standards and in appropriate color and design
- ☐ Installation of fences
- ☑ Storm window or storm door installation, repair, or replacement
- ☐ Installation of glass blocks in basement window openings
- ☐ Painting of existing unpainted brick
- ☐ Unattached nonvisible accessory structures
- ☐ Replacement of identical siding
- ☐ Replacement or repair to porches identical to existing style and materials
- ☐ Commercial sign replacement of identical dimensions

Petitioner Signature: Bryan Liphe _____

Owner Signature: _____

Date Received: _____ Staff: _____

Report to the
Landmarks Commission of the City of Green Bay

MEETING DATE	PREPARED BY
July 17, 2024	

AGENDA ITEM # F.1

Staff-level COA applications.

BACKGROUND

- COA 24-31, 500 Eliza, Fence
- COA 24-32, 840 S Jackson, Storm Windows
- COA 24-33, 1010 S Jackson, Gutters
- COA 24-34, 840 S Jackson, Roof, Gutters, Downspouts
- COA 24-35, 845 S Quincy, Fence
- COA 24-37, 1035 S Webster, Roof

RECOMMENDATION

FISCAL IMPACT

ATTACHMENTS

None